ESCG-8400-AMS-10-AMS-PR-0001

Electromagnetic Interference Test Procedures for the Alpha Magnetic Spectrometer-02 (AMS-02)

Systems Architecture and Integration Office
Engineering Directorate

Verify this is the correct version before use
For correct version go to: AMS-02 Project Documentation Website
(http://ams-02project.jsc.nasa.gov/html/Documents.htm)

February 17, 2010 – Revision Basic

National Aeronautics and
Space Administration

Lyndon B. Johnson Space Center
Houston, Texas

EXPORT CONTROL STATEMENT:
The AMS-02 payload has been reviewed by the Department of State and has been declared public domain data under ITAR (see ODTC Case CJ 015-01). The payload has also been reviewed by the Department of Commerce and has been categorized 1A999 (see CCATS# G026926), which allows free distribution of data to foreign nationals of all countries apart from North Korea, Syria, and Sudan. All data included in this package has been reviewed and found to be in the public domain.

ESCG-8400-AMS-10-AMS-PR-0001

NASA - LYNDON B. JOHNSON SPACE CENTER
HOUSTON, TEXAS

Electro-Magnetic Interference Test Procedures For the Alpha Magnetic Spectrometer-02

February 17, 2010 – Revision Basic

Prepared By:

D. Nguyen, Avionics Systems Engineer, ESCG

Approved By:

C. Tutt, Project Manager, ESCG

T. Martin, Project Manager, NASA JSC/EA3

1.0 REFERENCE DOCUMENT

ESCG-4390-08-SP-TP-0026, Electromagnetic Interference Test Plan for the Alpha Magnetic Spectrometer-02 (AMS-02).

1.1 PRECEDENCE

In the event of any conflict between ESCG-4390-08-SP-TP-0026 and this document, ESCG-4390-08-SP-TP-0026 shall take precedence.

2.0 TEST CONDITIONS

General test conditions.

2.1 GENERAL TEST CONDITIONS

- Conducted and radiated ambient levels shall be at least 6 decibels (dB) below the applicable limits specified in ESCG-4390-08-SP-TP-0026.

- Take readings of EMI ambient conditions with and without operations of Ground Support Equipment. Resolve any exceedences before performing testing on the Equipment Under Test (EUT).

- Ambient conditions shall be determined prior to the beginning of measurements on the energized EUT. Record and provide ambient condition data.

- Testing shall be performed under the following atmospheric conditions where possible:

  Temperature: 15 to 35 degrees Celsius
  Pressure: 610 to 780 mm Mercury
  Relative Humidity: 20 to 80 percent of saturation.

- When GSE equipment not operating during testing; verify all vent lines are sealed to prevent added noise generated from sources outside of chamber.

- If the EUT is susceptible to the applicable limit level, then the signal source output shall be decreased to determine and record the threshold of susceptibility.

- Adjust height of antennas about center of electronics. Distance to electronics ~ 1 meter.

- Remove bracing as required for straight line of sight as shown in Figure 2.1-1. Verify and obtain confirmation with AMS-02 Test Director before removing bracing.

- Recommended placement of antenna shown in Figure 2.1-2 below. Configurations may vary due to facility equipment availability. Document and record test configuration in EMI test report.

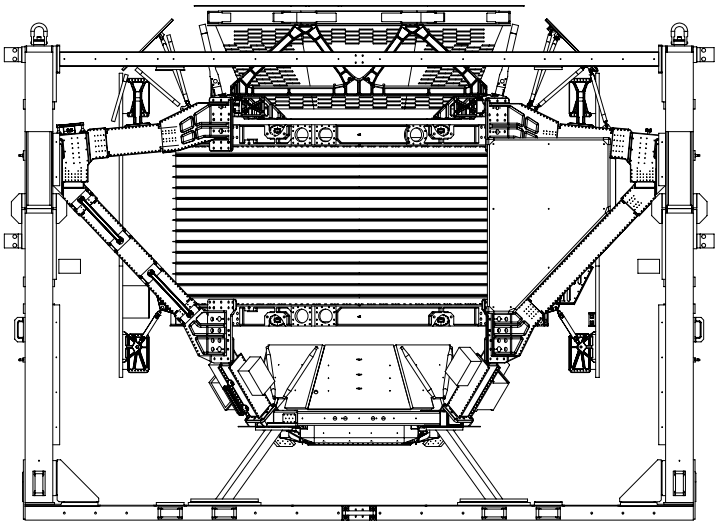

Figure 2.1-1 PSS BRACING REMOVED FOR ANTENNA DIRECT LINE OF SIGHT TO ELECTRONIC BOXES (PAYLOAD PORT SIDE SHOWN. PSS BRACING ALSO REMOVED ON PAYLOAD STARBOARD SIDE.)

Figure 2.1-2 ANTENNA PLACEMENT DURING TESTING. CONFIGURATION MAY VARY DUE TO FACILITY EQUIPMENT AVAILABILITY.

3.0 GROUNDING

DC Resistance at ground point. Reference ESCG-4390-08-SP-TP-0026 for applicable limits.

3.1 TEST EQUIPMENT

- Milliohm Meter
- Test Leads

3.2 TEST PROCEDURE

- Record and verify direct current (dc) bonding resistance is within applicable limits called out in ESCG-4390-08-SP-TP-0026.

  Resistance from ground strap to AMS-02 Trunnion.
  Resistance from ground strap to PSS
  Resistance from PSS to chamber ground.

- The Primary Support Stand (PSS) shall be considered a part of the ground plane for testing purposes and shall be bonded accordingly.

- Bonding of the EUT for tests shall be in accordance with the approved installation drawings for the equipment.

- Bonding provisions used for all testing shall be documented and recorded.

4.0 TESTS

Each of the following subsections covers one test. The test team may conduct these tests in any order.

4.1 CE01, CONDUCTED EMISSIONS

Direct current power, low frequency. Reference ESCG-4390-08-SP-TP-0026 for applicable limits.

4.1.1 TEST EQUIPMENT

- Current probe
- Electromagnetic interference analyzer with a narrowband capability
- 10 microfarad fee-through capacitors.

4.1.2 TEST SETUP

The test setup shall be as shown in Figure 4.1.2-1.

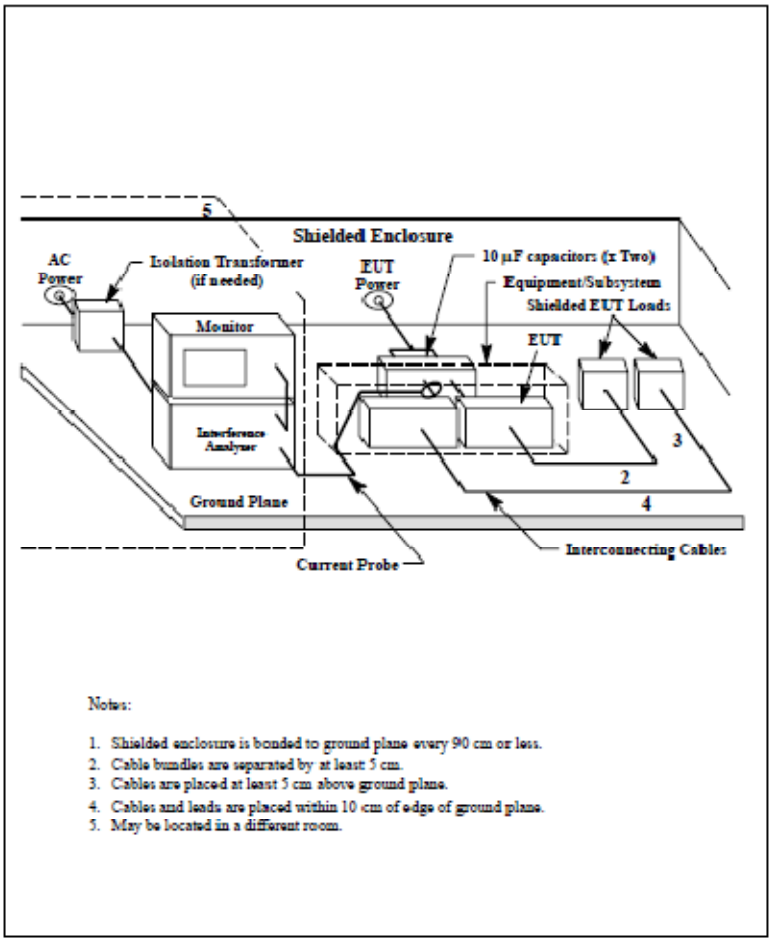

Figure 4.1.2-1. TYPICAL TEST SETUP FOR MEASURING CONDUCTED EMISSIONS ON DC POWER LINES OR INTERCONNECTING LEADS (CE01 AND CE03)

4.1.3 TEST PROCEDURE

- Measurements shall be taken with the interference analyzer bandwidth.
- CE01 testing to be performed at payload high power profile (max I).

4.2 CE03, CONDUCTED EMISSIONS

Direct current power leads. Reference ESCG-4390-08-SP-TP-0026 for applicable limits.

4.2.1 TEST EQUIPMENT

- Current probe
- Matching transformer if required between current probe and the interference meter to allow the measuring system to meet the sensitivity requirements needed to perform the test.
- Interference analyzer
- Isolation transformer for interference analyzer as required.

4.2.2 TEST SETUP

The test setup shall be as shown in Figure 4.1.2-1.

4.2.3 TEST PROCEDURE

- Measurements shall be taken with the interference analyzer bandwidth.

- CE03 testing to be performed at payload high power profile (max I).

4.3 CE07, CONDUCTED EMISSIONS

Direct current power leads, spikes, time domain. Reference ESCG-4390-08-SP-TP-0026 for applicable limits.

4.3.1 TEST EQUIPMENT

- Line Impedance Stabilization Network (LISN) provided by Jacobs Technology
- Oscilloscope
- Switch
- Recording Device
- Triggering Device

4.3.2 TEST SETUP

The test setup shall be as shown in Figure 4.3.2-1.

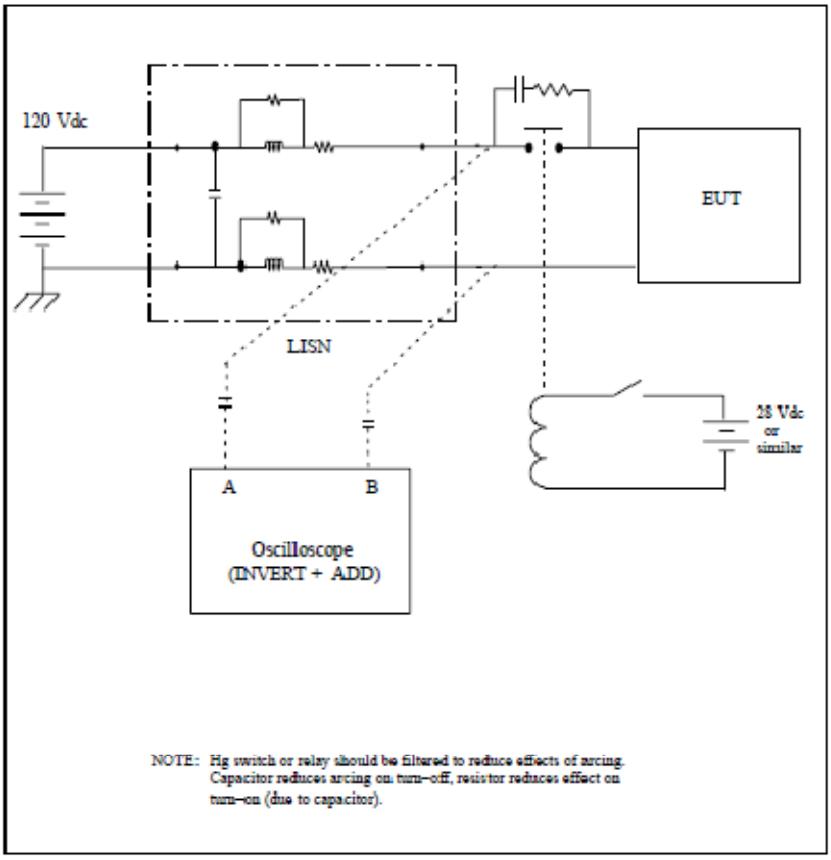

Figure 4.3.2-1. CE07 TYPICAL TEST SETUP

4.3.3 TEST PROCEDURE

- With the test setup of Figure 4.3.2-1, cycle the power to the EUT on/off and exercise all the appropriate internal EUT mode switches. Record the voltage transients. Compare against the appropriate transient specification.

- CE07 testing to be performed at payload high power profile (max I).

4.4 CS01, CONDUCTED SUSCEPTIBILITY

Direct current power leads. Reference ESCG-4390-08-SP-TP-0026 for applicable limits.

4.4.1 TEST EQUIPMENT

- Signal generator capable of providing the required test frequencies
- Audio power amplifier of 50 watts (W) or greater with output impedance less than or equal to 2.0 ohms and capable of delivering 50 W into a 0.5 ohm resistive load connected across the isolation transformer secondary.
- Oscilloscope
- Voltmeter
- Isolation transformer
- A 100 microfarad capacitor may be required as a shunt to dc power source impedance if difficulty is encountered in obtaining the required test voltage.

4.4.2 TEST SETUP

The test setup shall be as shown in Figure 4.4.2-1.

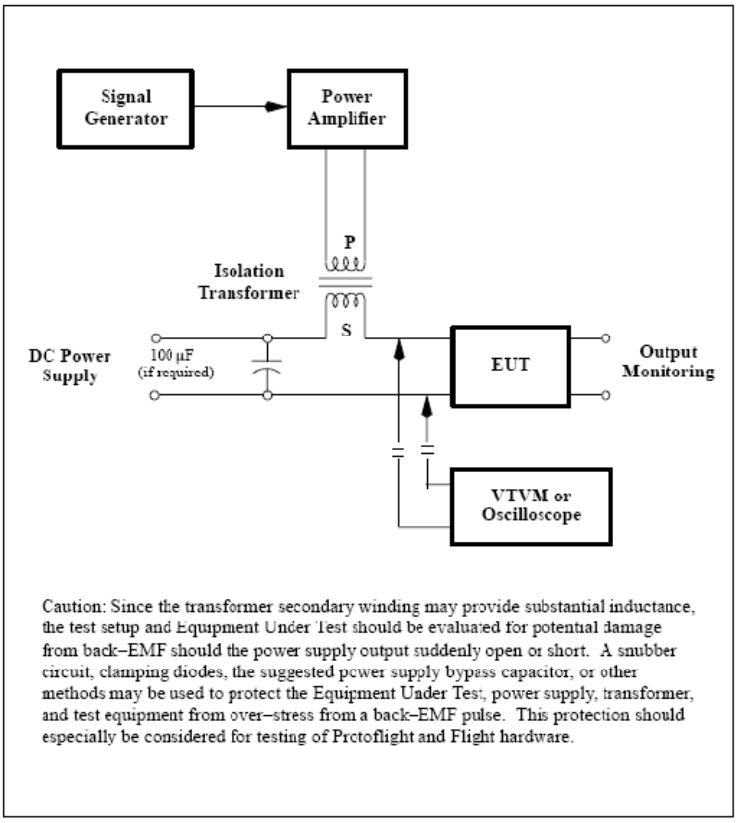

Figure 4.4.2-1. CS01 30 Hz to 50 kHz TYPICAL TEST SETUP

4.4.3 TEST PROCEDURE

- The signal generator shall be turned through the required frequency range with the power amplifier output adjusted to the level specified

- The equipment shall be monitored for malfunction, degradation of performance, and deviation of parameters beyond tolerances indicated in the equipment specification

- CS01 testing to be performed at payload high power profile (max I).

4.5 CS02, CONDUCTED SUSCEPTIBILITY

Direct current power leads. Reference ESCG-4390-08-SP-TP-0026 for applicable limits.

4.5.1 TEST EQUIPMENT

- Signal Source: a 50 ohm output impedance source capable of generating 1 volt (V rms and/or 1 W output, minimum, into a 50 ohm load
- LISN provided by Jacobs (Note: Lead not being tested should bypass LISN)
- Voltmeter, oscilloscope, or interference analyzer
- Coupling capacitor: The capacitor shall be used to isolate the power line frequencies from the signal source and shall have an RF impedance of 5 ohms or less, over the frequency range of the test. The capacitor may be changed during the test to maintain the impedance.

4.5.2 TEST SETUP

The test setup shall be as shown in Figure 4.5.2-1.

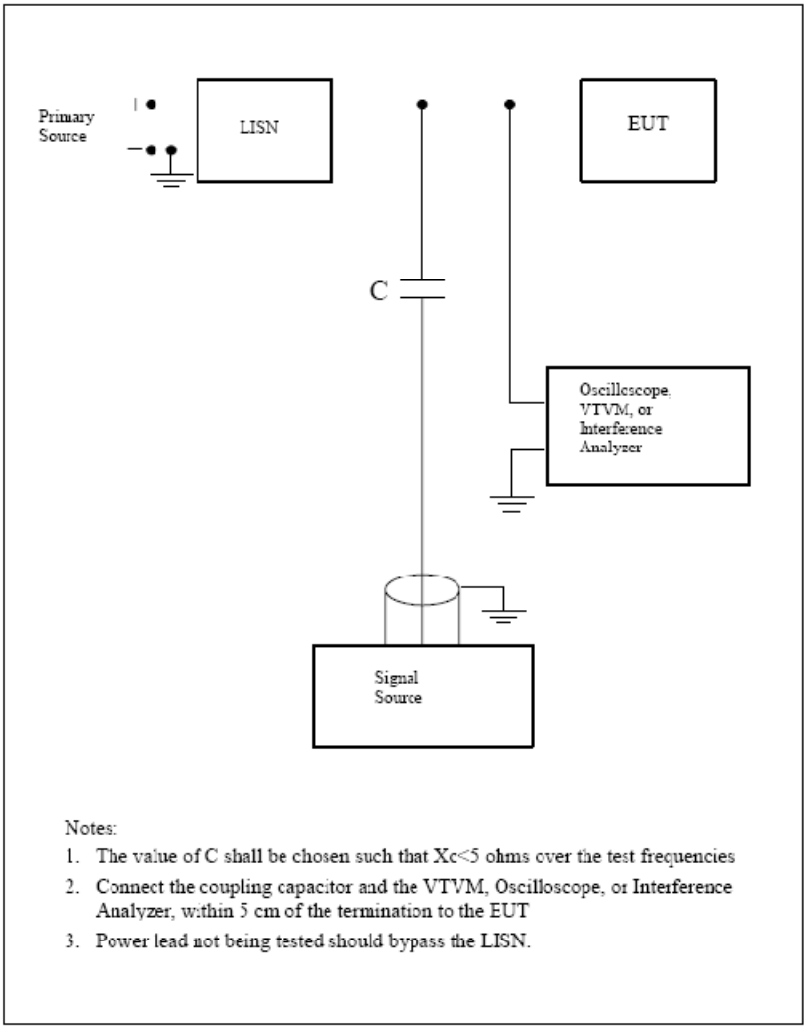

Figure 4.5.2-1. CS02 50 kHz to 50 MHz TYPICAL TEST SETUP

4.5.3 TEST PROCEDURE

- The coupling capacitor and voltmeter, oscilloscope, or interference analyzer shall be connected within 5 cm of the termination to the EUT (for cases where the size or configuration of the EUT prevents the injection point from being 5 cm from the connector, the actual distance between the injection point and the connector shall be documented in the EMI test report)

- The test signal shall be applied to each power led

- When testing equipment using single point grounds (dc power input leads isolated within the EUT), the test signal shall be applied between each power lead or ground return lead and the ground plane

- The voltage across the injection terminal to ground of the EUT shall be measured and recorded

- If the EUT is susceptible to the applicable limit level, then the signal source output shall be decreased to determine and record the threshold of susceptibility.

- CS02 testing to be performed at payload high power (max I) profile.

4.6 CS06, CONDUCTED SUSCEPTIBILITY

Spikes, power lead. Reference ESCG-4390-08-SP-TP-0026 for applicable limits.

4.6.1 TEST EQUIPMENT

- Spike Generator
- Capacitor as required
- Oscilloscope

4.6.2 TEST SETUP

The test setup shall be as shown in Figure 4.6.2-1 or 4.6.2-2.

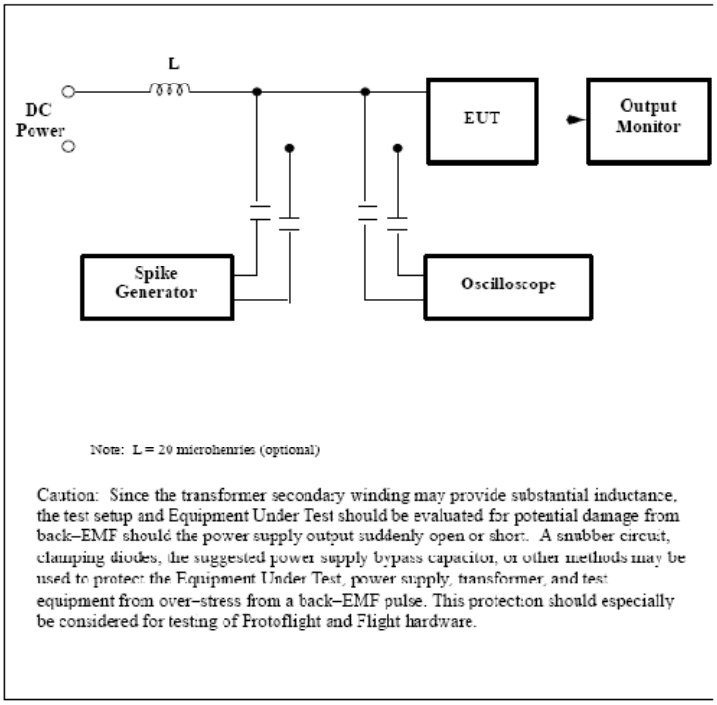

Figure 4.6.2-1. CS06 PARALLEL INJECTION TYPICAL TEST SETUP

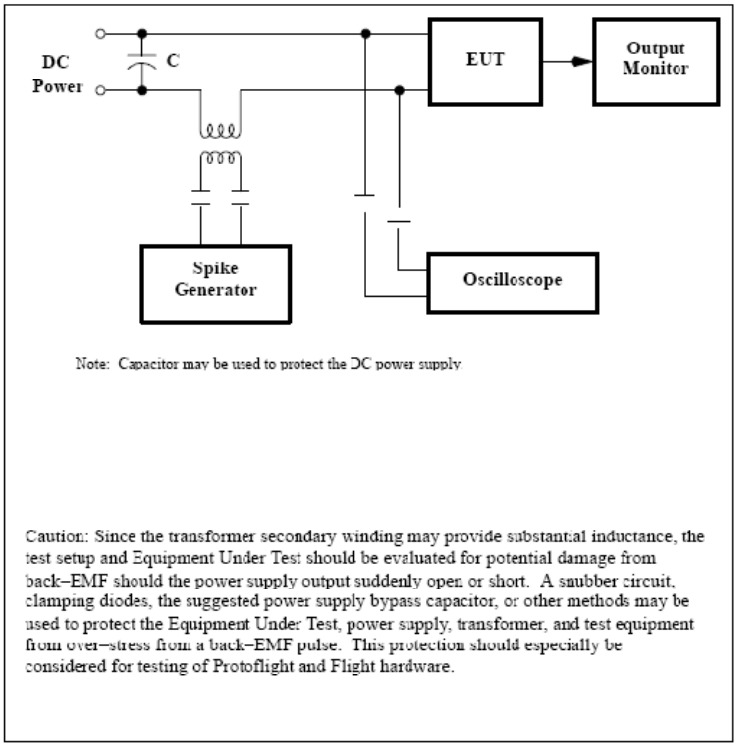

Figure 4.6.2-2. CS06 SERIES INJECTION TYPICAL TEST SETUP

4.6.3 TEST PROCEDURE

- The applied spike amplitude, rise time, and duration, as measured by the oscilloscope across the input terminals of the EUT, shall follow the typical wave shape and amplitude as specified in ESCG-4390-08-SP-TP-0026.
-

  The applied spike shall be developed across a noninductive 5 ohm resistor and then applied to the EUT.

- Repetitive (6 to 10 pulses per second) spikes, both positive and negative, shall be applied to the EUT ungrounded input lines for period not less than 2 minutes in duration. On equipment employing gated circuitry, the spike shall be triggered to occur within the time frame of the gate.

- If susceptibility occurs, then its threshold level, repetition rate, and time of occurrence on circuit gates shall be determined and recorded.

- CS02 testing to be performed at payload low, mid, and high power profiles.

4.7 RE02, RADIATED EMISSIONS

Electric field (narrowband). Reference ESCG-4390-08-SP-TP-0026 for applicable limits.

4.7.1 TEST EQUIPMENT

- Test antennas
- Interference analyzer (set in peak mode).

4.7.2 TEST SETUP

The test setup shall be as shown in Figure 4.7.2-1.

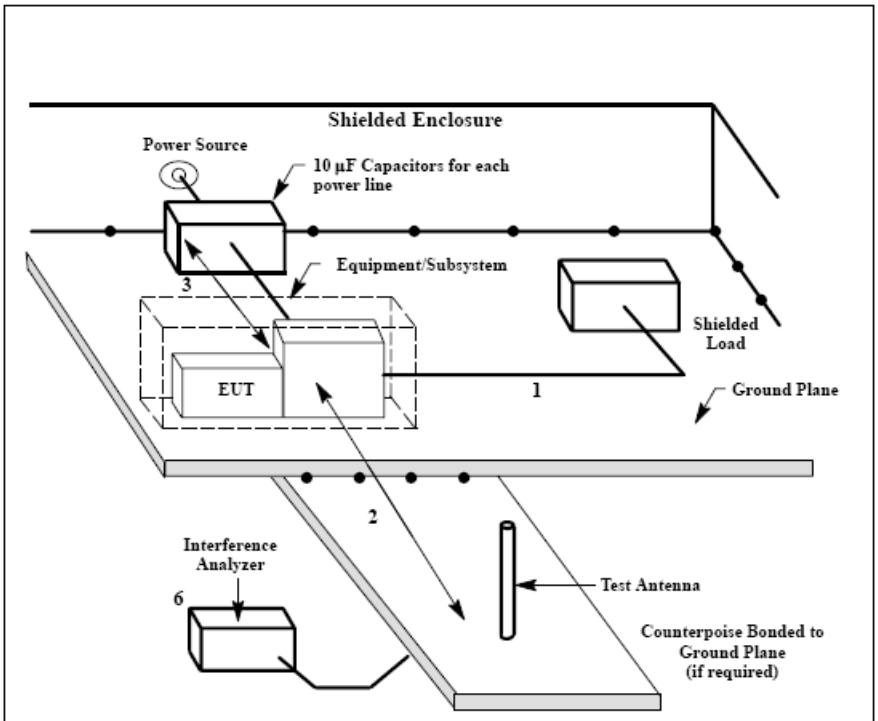

Notes:

1. Cables are placed at least 5 cm above ground plane.
2. Requirement at 1 meter.
3. Input power leads are greater than 2 meters and less than 3 meters in length.
4. If the test sample is comprised of more than one unit, interconnecting cable lengths of at least 2 meters shall be exposed to the test antenna except for deliverable cables whose length is less than 2 meters.
5. Matching network is mounted below counterpoise.
6. For measurements above 30 MHz, the interference analyzer shall be placed outside the shielded enclosure.

Figure 4.7.2-1. RE02 TYPICAL TEST SETUP

4.7.3 TEST PROCEDURE

- The EUT shall be probed to locate the points of maximum radiation from the EUT.

- RE02 testing to be performed at payload high power profile (max I).

4.8 RS02, RADIATED SUSCEPTIBILITY

Magnetic induction field. Reference ESCG-4390-08-SP-TP-0026 for applicable limits.

4.8.1 TEST EQUIPMENT

- Spike generators
- A dual channel oscilloscope having a 10 MHz bandwidth.

4.8.2 TEST SETUP

The test setup shall be as shown in Figure 4.8.2-1.

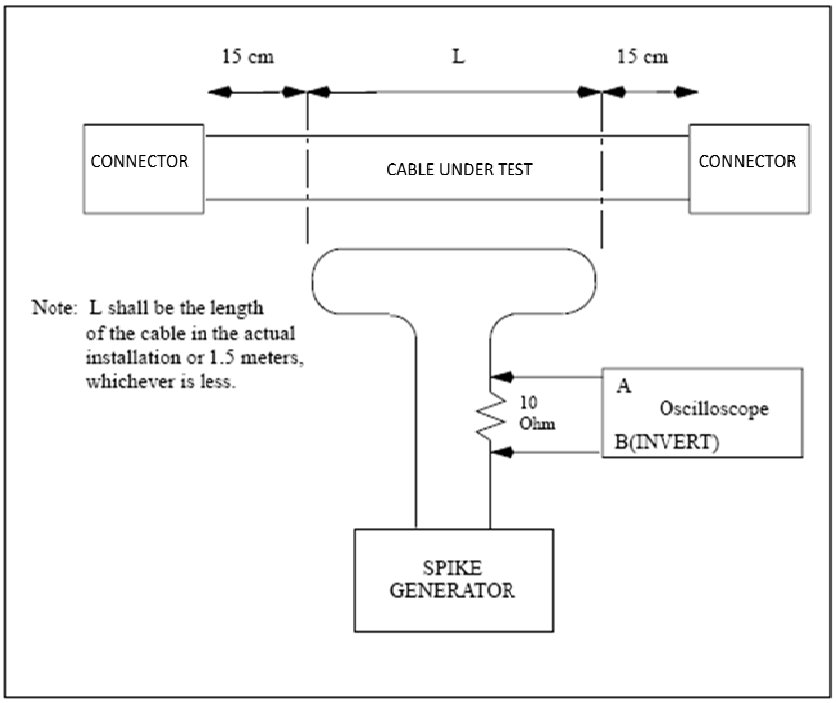

Figure 4.8.2-1. RS02 TYPICAL TEST SETUP

4.8.3 TEST PROCEDURE

- Two spike signals, both positive and negative, shall be impressed at a rate of 400 Hz or at the maximum rate at which the waveforms and amplitudes specified in ESCG-4390-08-SP-TP-0026 can be achieved. The waveforms and amplitudes of the spike signals shall be measured across a noninductive 10 ohm resistor. The measurement device shall be an oscilloscope, configured to read differentially across the resistor. That is, two probes shall be used to connect at the resistor terminals and one channel's input shall be subtracted from the other (oscilloscope in ADD and INVERT modes).

4.9 RS03PL, RADIATED SUSCEPTIBILITY

Electric field. Reference ESCG-4390-08-SP-TP-0026 for applicable limits.

4.9.1 TEST EQUIPMENT

- A signal source capable of generating electric fields and frequencies specified in ESCG-4390-08-SP-TP-0026.
- An interference analyzer to measure test field strengths
- Antennas

4.9.2 TEST SETUP

The test setup shall be as required by the general testing requirements of this document for placement of antennas.

4.9.3 TEST PROCEDURE

- Test signal levels shall be as specified in ESCG-4390-08-SP-TP-0026.

- The test signal shall be established at the mounting location of the EUT. The field strengths shall be verified as required.

- The signal generators shall be tuned through the required frequency ranges with the power output adjusted to provide the fields specified in ESCG-4390-08-SP-TP-0026.

- The equipment shall be monitored for evidence of susceptibility.