FLIGHT SAFETY DATA PACKAGE FOR AMS-02 ISS DIGITAL DATA RECORDING SYSTEM (ISS DDRS)

Engineering Directorate

Verify that this is the correct version before use.
For current version go to the JSC Quality System - ISO 9000 Homepage on Web.

October 2010

National Aeronautics and
Space Administration

Lyndon B. Johnson Space Center
Houston, Texas

This document is under the Document Configuration Control AMS.
Printed hardcopy is for uncontrolled reference only.

(This Page Intentionally Blank)

This document is under the Document Configuration Control AMS.
Printed hardcopy is for uncontrolled reference only.

FLIGHT SAFETY DATA PACKAGE FOR THE AMS-02 ISS DIGITAL DATA RECORDING SYSTEM (ISS DDRS)

NASA/JSC APPROVAL

10-20-10

T. D. Martin,
AMS Project Manager
Engineering Directorate

AMS Project Office

Engineering Directorate

NATIONAL AERONAUTICS AND SPACE ADMINISTRATION
LYNDON B. JOHNSON SPACE CENTER
HOUSTON, TEXAS

October 2010

This document is under the Document Configuration Control of AMS
Printed hardcopy is for uncontrolled reference only.

(This Page Intentionally Blank)

This document is under the Document Configuration Control of AMS
Printed hardcopy is for uncontrolled reference only.

FLIGHT SAFETY DATA PACKAGE FOR THE AMS-02 ISS DIGITAL DATA RECORDING SYSTEM (ISS DDRS)

PREPARED BY: 10/20/2010

L. D. Hill, AMS Flight Safety Engineer
Advanced Systems

APPROVED BY:

10/20/2010

G. R. Brown, AMS AMS-02 ISS DDRS Project Engineer
Systems Engineering Services

for Wes Gordon
20 Oct 2010

W. B. Gordon, AMS AMS-02 ISS DDRS Project Manager
Division and Project Integration Office

Prepared By:
Engineering and Sciences Contract Group
Jacobs Sverdrup
Houston, Texas

Contract NNJ05HI05C
For
Engineering Directorate

NATIONAL AERONAUTICS AND SPACE ADMINISTRATION
LYNDON B. JOHNSON SPACE CENTER
HOUSTON, TEXAS
September 2010

This document is under the Document Configuration Control of AMS
Printed hardcopy is for uncontrolled reference only.

(This Page Intentionally Blank)

Change Record

Rev.	Date	Originator/Phone	Description
Baseline	09/10	L.D. Hill/ 281 461 5701	Initial Release
A	10/10	L.D. Hill/ 281 461 5701	Revision to Reflect Post Safety Review Content

(This Page Intentionally Blank)

Table of Contents

Change Record vii
Table of Contents ix
1. INTRODUCTION 1
2. SCOPE 1
3. PURPOSE 1
4. AMS-02 ISS DDRS PROJECT OVERVIEW 1
5. AMS-02 ISS DDRS SYSTEM 1
5.1 OVERVIEW 1
5.2 INTERFACES 4
5.3 AMS-02 ISS DDRS PARTS 6
5.3.1 AMS Network Cable –10 ft. 7
5.3.2 AMS Network Cable –40 ft. 8
5.3.3 AMS Network Jack 8
5.3.4 AMS HRDL Cable 9
5.3.5 AMS Adapters 9
5.3.5.1 AMS Xmtr Adapter 10
5.3.5.2 AMS Rcvr Adapter 11
5.3.6 AMS USB Cable 11
5.3.7 AMS Short Extension Cable 12
5.3.8 AMS Long Extension Cable 12
5.3.9 AMS HD (Kit) Bag 12
5.3.10 AMS Hard Disk Drives 13
5.3.10.1 AMS 500GB Hard Drive 15
5.3.10.2 AMS 750GB Hard Drive 15
6. AMS-02 ISS DDRS Operations 17
7. Safety Summary 19
7.1 Safety Analysis and Identified Hazards 19
7.1.1 Structural Failure 19
7.1.2 Sealed Containers 19
7.1.3 Vented Containers 20
7.1.4 Sharp Edges, Corners and Protrusions 20
7.1.5 Shatterable Material Release 20
7.1.6 Flammable Materials. 20
7.1.7 Materials Offgassing 20
7.1.8 RF Radiation 20
7.1.9 Lasers 20
7.1.10 Batteries 20
7.1.11 Touch Temperature 20
7.1.12 Electrical Power Distribution 21
7.1.13 Ignition of Flammable Atmospheres of the Payload Bay 21
7.1.14 Rotating Equipment 21
7.1.15 Mating/Demating of Powered Connectors 21

7.1.16 Blocking Crew Egress from Module. 21
7.1.17 Release of Material 21
7.1.18 Galvanic Corrosion 21
7.2 Life Limited Parts 21
7.3 Fire Detection and Suppression 22
7.4 Maintenance 22
7.5 Operational Controls 22
7.6 Toxic Materials 22
7.7 Batteries 22
7.8 On-Orbit Verification/Reverification 22
7.9 Anomalies and Failures 22
7.9.1 EMI Testing 22
7.10 Noncompliances 23
7.11 Action items 23
7.12 GFE Certification 23
8. Hazard Report(s) 25
9. Fire Detection and Suppression Form 76
CERTIFICATE OF NSTS/ISS PAYLOAD SAFETY COMPLIANCE ..... **Error! Bookmark not defined.**
NSTS/ISS PAYLOAD SAFETY VERIFICATION TRACKING LOG 79

1. INTRODUCTION

This Phase I/II/III Flight Safety Data Package for the Alpha Magnetic Spectrometer-02 (AMS-02) ISS DDRS is submitted in response to the safety requirements of NSTS 1700.7B, "Safety Policy and Requirements for Payloads Using the Space Transportation System", and NSTS 1700.7B, ISS Addendum, —Safety Policy and Requirements for Payloads Using the International Space Station. This safety package has been prepared in accordance with NSTS/ISS 13830C, "Payload Safety Review and Data Submittal Requirements for Payloads Using the Space Shuttle/International Space Station. Also, JSC 26943, "Guidelines for the Preparation of Payload Flight Safety Data Packages and Hazard Reports for Payloads Using the Space Shuttle", was used as a guideline document.

2. SCOPE

This Safety Data package contains the safety analysis performed for the AMS-02 ISS Digital Data Recording System (ISS DDRS) flight hardware and flight operations of the AMS-02 mission.

3. PURPOSE

The purpose of this safety analysis is as follows:

- Identify potential flight hazards associated with the AMS-02 ISS DDRS Payload design and operation
- Evaluate their cause and impact on ISS, and flight crews
- Define methods for eliminating or controlling the hazards
- Document the status of the verification methods

This safety package is intended to provide the information necessary for a review of the AMS-02 ISS DDRS Payload by the JSC Payload Safety Review Panel (PSRP). A Verification Tracking Log of all open verifications at the time of this submittal is provided to document all open verification work at the time of the submittal.

4. AMS-02 ISS DDRS PROJECT OVERVIEW

The ISS Digital Data Recording System is a state-of-the-art T61p laptop based system that will nominally provide a recording of the AMS-02 science data as close to the source as possible. DDRS also provides a means for the ISS crew to observe operational data and command the AMS-02 Payload. In the event ISS data systems or ground commanding are unavailable for AMS-02, the AMS-02 experiment can be completely operated from the alternate interface that AMS-02 ISS DDRS provides. The AMS-02 ISS DDRS command path to AMS-02 is via High Rate Data Link.

5. AMS-02 ISS DDRS SYSTEM

5.1 OVERVIEW

The ISS Digital Data Recording System (AMS-02 ISS DDRS) is a NASA provided T61p ISS laptop, dedicated for AMS use. It will:

- Provide recording (24/7) on-board the ISS for AMS-02 payload data

- Provide play-back capability to downlink lost or corrupted AMS-02 payload data
- Protect for ISS data systems, as well as AMS-02 payload, outages
- Allow for contingency crew monitoring of AMS-02 payload status
- Allow for contingency crew commanding of AMS-02 payload systems

The AMS-02 ISS DDRS interfaces consist of a High Rate Data Link (HRDL, fiber-optic) bi-directional connection at Utility Interface Panel (UIP), an ISSLAN JSL connection, and 28VDC input power at ExPRESS (EXpedite the PRocessing of Experiments to the Space Station) Rack located in the US Laboratory Module (nominally).

The AMS-02 ISS DDRS resident AMS-02 ISS DDRS software is loaded on T61p prime hard-drive. Recorded AMS-02 payload data will be stored on an AMS-02 project certified / provided 500GB/750GB SATA hard-drive located in the GFE Ultra-Bay Adaptor installed in the T61p ISS laptop. Crew hard-disk change-out is minimized by over-writing data on the AMS disk once it is verified on the ground (only used to prolong hard disk life).

The AMS-02 ISS DDRS interfaces and functionality are shown in the schematic Figure 5.1-1, and a CAD representation of the AMS-02 ISS DDRS installation is shown in Figure 1-2. The AMS-02 ISS DDRS HRDL to USB adaptors are shown in Figure 1-3. The rear unit, marked Transmitter, shows the HRDL fiber optic interface while the near field unit (Receiver) shows the USB “B” interface. These units are engineering units and utilize a socket for the main integrated circuit chips, for the flight units, the chips will be soldered in place.

The commanding potential impact of the AMS-02 ISS DDRS as a commanding source as been considered within the core AMS-02 Flight Safety Package as the AMS-02 ISS DDRS provides a subset of available ground based commanding. There are no safety critical commands stored or available through the AMS-02 ISS DDRS system to the AMS-02.

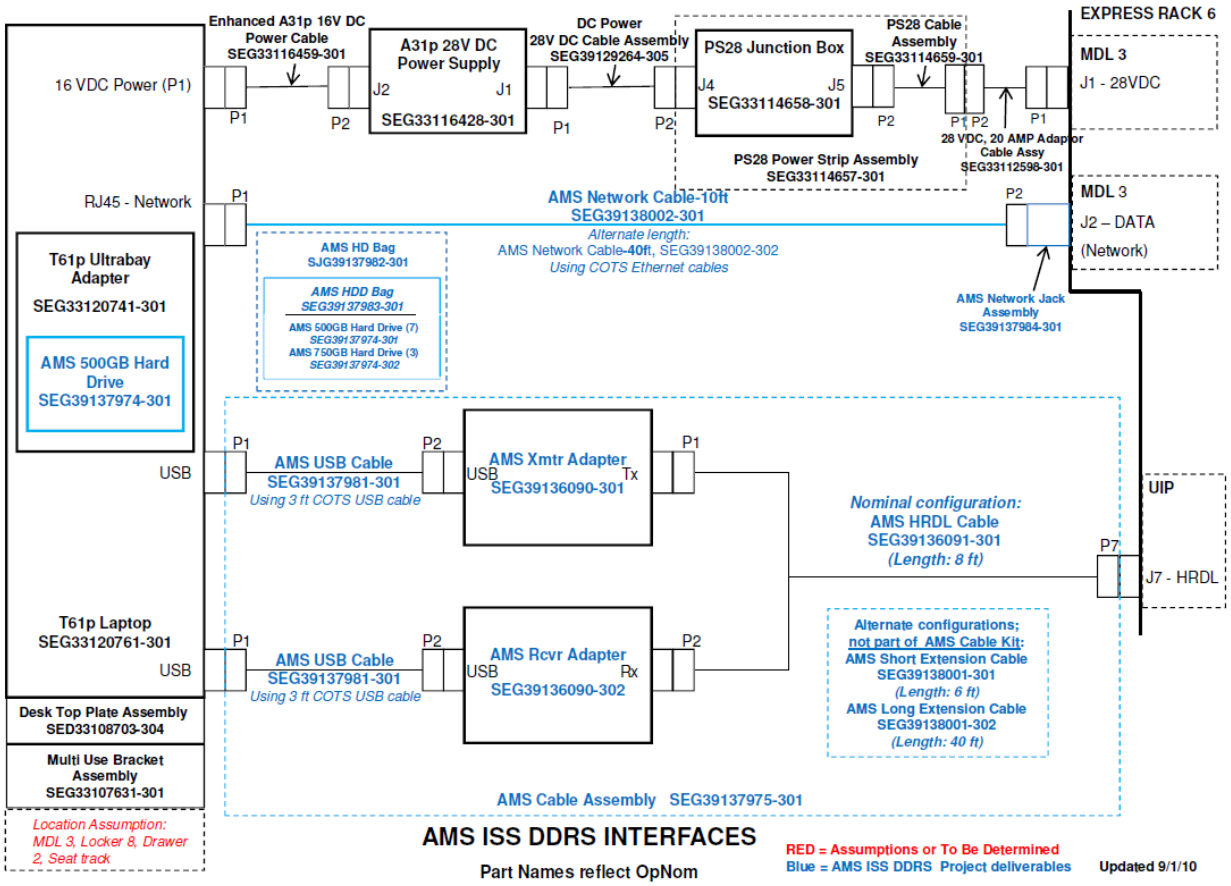

Figure 5.1-1 AMS-02 ISS DDRS Hardware and Interfaces

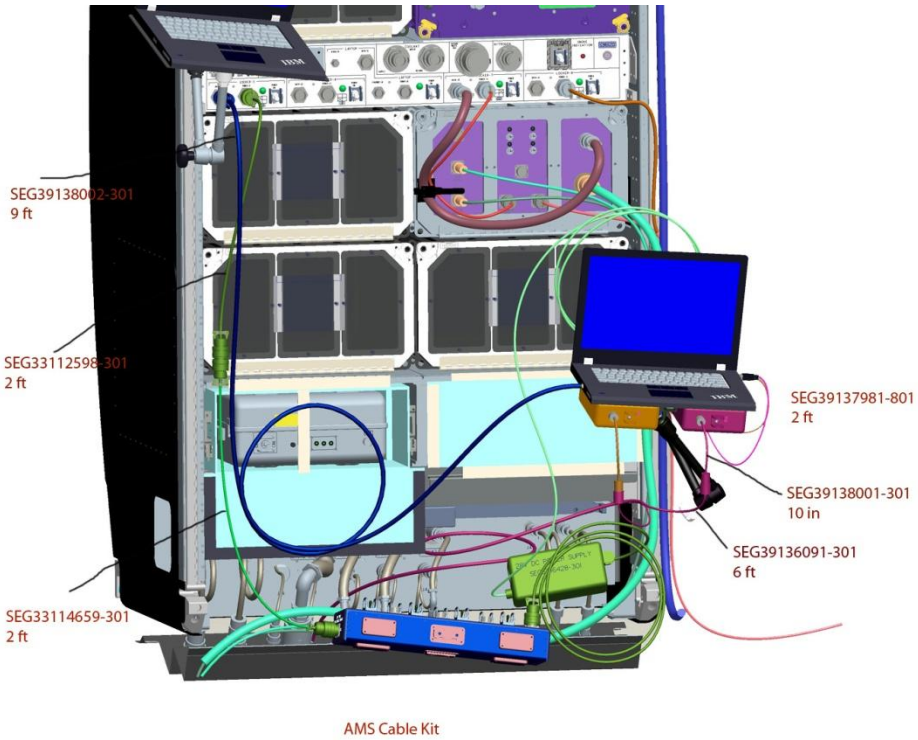

Figure 5.1-2 AMS-02 ISS DDRS Installed on ExPRESS Rack

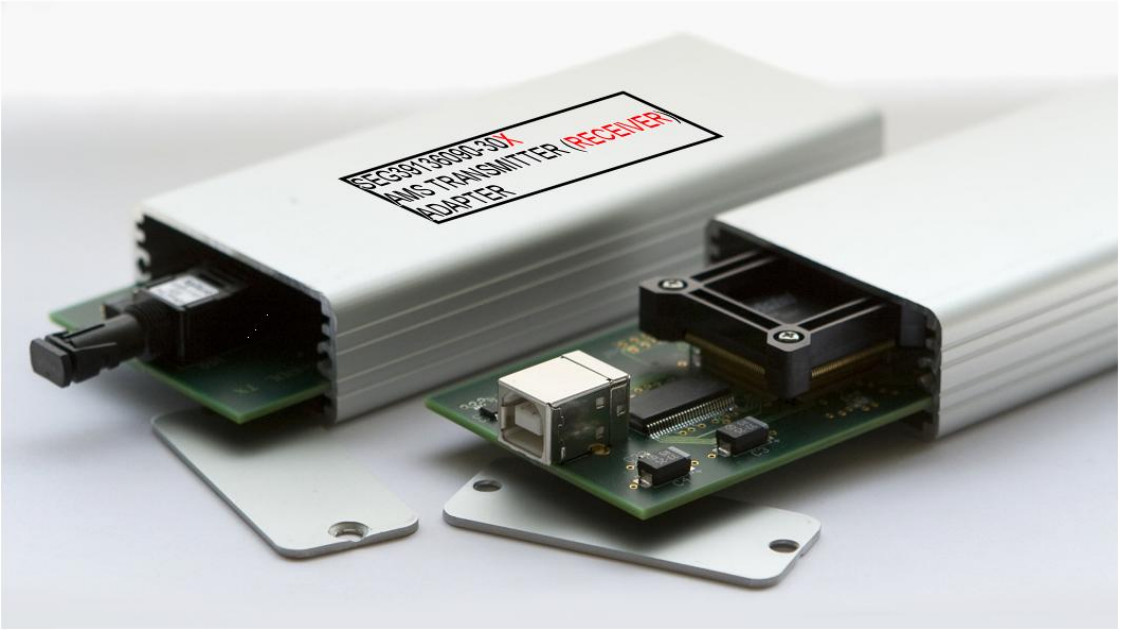

Figure 5.1-3 AMS-02 ISS DDRS-02 HRDL to USB Adaptors
(Engineering Model with removable chip, Flight chip will be soldered in place)

5.2 INTERFACES

AMS-02 ISS DDRS command path to AMS-02 is via a bi-directional High Rate Data Link at the ISS Utility Interface Panel of an ISS ExPRESS Rack. AMS-02 ISS DDRS also provides ISS LAN Joint Station Lan (JSL) connection to the ExPRESS Rack at the J2 connection. The dedicated T61p Laptop computer is powered by 28V DC connection at the ExPRESS Rack.

AMS-02 ISS DDRS hardware specifically interfaces with:

- T61p (GFE) network port
- ISS MDL3 network access point
- T61p (GFE) USB ports
- ISS HRDL port (Fiber optic)
- T61p Ultrabay Adapter Assy (GFE)

The AMS-02 ISS DDRS does not interface directly with ISS power, all power is provided through the T61p USB ports and through the Ultrabay adapter which are voltage regulated and current limited through the T61p.

All GFE interfaces are being utilized within their certifications.

5.3 AMS-02 ISS DDRS PARTS

All ISS provided GFE is being used within its certification. Table 5.3-1 shows the name and part number of the ISS GFE that the AMS-02 ISS DDRS will make use of. Table 5.3-1 lists the AMS Project provided hardware for the AMS-02 ISS DDRS

Table 5.3-1 AMS-02 ISS DDRS Utilized GFE Parts

Op Nom	Part Number
NASA Fiber Optic Cable	NFOC-2FFF-1GRP-1
UIP P7 Connector Assembly	NATC06G13N4PN
Backshell	M85049/38S13N
Plug Protective Cover	NATC-PPC-N-13-06
Fiber Pin Termini Contact	NZGC-F-16PB
J7 Fiber Socket Termini Contact	NZGC-F-16SB
P2 Connector Assembly to Express MDL 3 J2	MS27467T15F35P
P2 Mate to J2 Connector	MS27468T15F35S
Contact Pins	M39029/58-360
P2 Mate to J2 Pins	M39029/56-348
Connector Cap	MS27501F15C
ESD Stowage Bags	528 43072-6
T61p Laptop	SEG33120761-301
T61p 160 GB Prime Hard Drive (Prime installed)	SEG33120738-301
T61p Internal Battery (installed)	SEG33120739-301
T61p Ultrabay Adapter Assy (installed)	SEG33120741-301
T61p Firmware/BIOS	SKG33120762_C
T61p 160 GB Prime Hard Drive (uninstalled data spare)	SEG33120738-301
T61p Ultrabay Adapter Assy (uninstalled) (Can be from onboard pantry)	SEG33120741-301
PGSC DC PWR cable	SEG33116459-301
DC PWR SUPLY	SEG33116428-301
DC PWR SUPLY cable	SEG39129264-305
PS28 Power Strip Assembly	SEG33114657-301
PS28 Junction Box	SEG33114658-301
PS28 Cable Assembly	SEG33114659-301
28 VDC, 20 AMP Adaptor Cable Assy	SEG33112598-301
Desk Top Plate Assembly	SED33108703-304
Multi-Use Bracket Assembly	SEG33107631-301

Table 5.3-2 AMS Project Provided Hardware for AMS-02 ISS DDRS

Op Nom	Part Number	Serial Number	Qty Needed	Weight (lbs)	Stowage Dimension (Inches) W x L x H
AMS Network Cable-10FT	SEG39138002-301	1001, 1002	2	0.5	10 x 10 x 2
AMS Network Cable - 40FT	SEG39138002-302	1003, 1004	2	0.5	12 x 12 x 4
AMS Network Jack	SEG39137984-301	1001, 1002	2	0.5	1.5 x 1.5 x 4
AMS Cable Kit	SEG39137975-301	1001, 1002	2	1.2	12 x 12 x 4
AMS HRDL Cable	SEG39136091-301	1001, 1002	2 (1/kit)	0.5	12 x 12 x 4
AMS USB Cable	SEG39137981-301	1001-1004	4 (2/kit)	0.1	6 x 6 x 1
AMS Xmtr Adapter	SEG39136090-301	1001, 1002	2 (1/kit)	0.3	2.5 x 3.5 x 0.9
AMS Rcvr Adapter	SEG39136090-302	1003, 1004	2 (1/kit)	0.3	2.5 x 3.5 x 0.9
AMS Short Extension Cable	SEG39138001-301	1001, 1002	2	0.75	12 x 12 x 1
AMS Long Extension Cable	SEG39138001-302	1003, 1004	2	2.4	12 x 12 x 4
AMS HD Bag (kit)	SJG39137982-301	1001	1	1.5	9 x 7 x 3
AMS 500GB HD	SEG39137974-301	1001-1007	7	0.25 (x7)	2.75 x 4 x 0.3 (x7)
AMS 750GB HD	SEG39137974-302	1008- 1010	3	0.25 (x7)	2.75 x 4 x 0.3 (x3)

5.3.1 AMS Network Cable –10 ft.

The AMS Network Cable-10FT is a commercial off the shelf (COTS) Ethernet cable that is 10 feet long wrapped in Teflon tape to address material concerns. Each end of the cable is a standard RJ45 connector connected to the Cat-5 cable. The cable utilizes Low Smoke Zero Hydrogen (LMZH) jacketing material. Figure 5.3.1 shows the generic construction of the network cable without the Teflon tape overwrap.

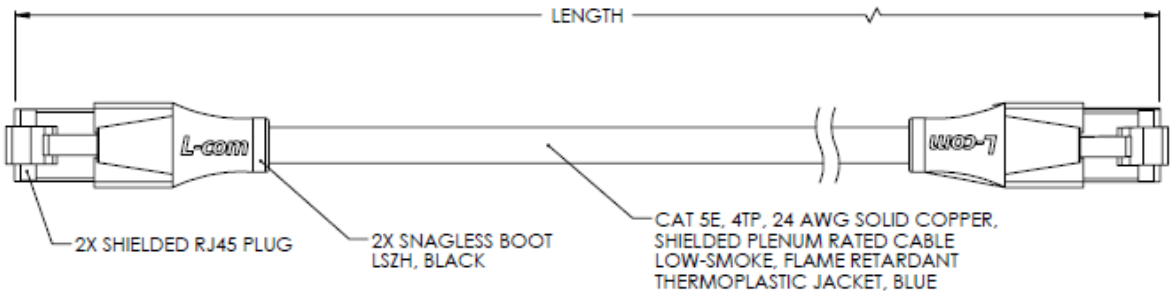

Figure 5.3-1 AMS Network Cable Construction

5.3.2 AMS Network Cable –40 ft.

The AMS Network Cable-40FT is a commercial off the shelf (COTS) Ethernet cable that is 40 feet long wrapped in Teflon tape to address material concerns. Each end of the cable is a standard RJ45 connector connected to the Cat-5 cable. The cable utilizes Low Smoke Zero Hydrogen (LMZH) jacketing material. See Figure 5.3.1 for construction of cable with exception of Teflon tape overwrap.

5.3.3 AMS Network Jack

This adapter converts the RJ45 connector that the AMS Short and Long Network Cables would interface with to the Mil Connector that is capable of interfacing with the ExPRESS Rack data port. The Jack uses a Cat-6 socket that is wired to the MIL-DTL-38999 Series I Circular Connector. Figure 5.3.2 shows this component.

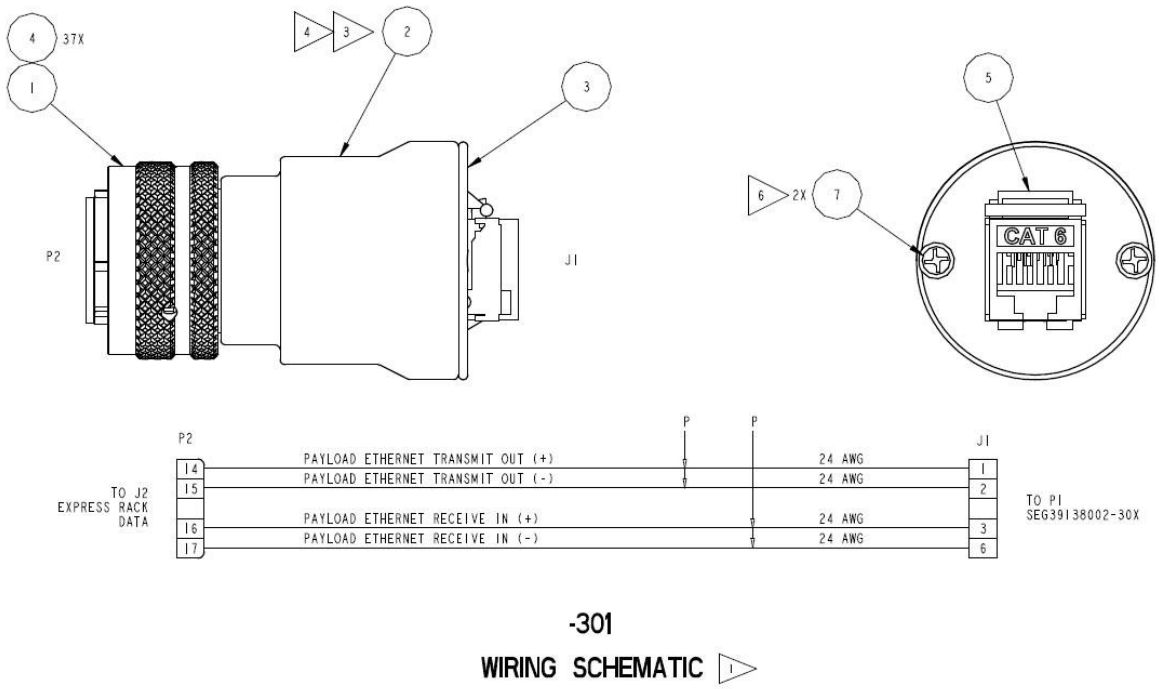

Figure 5.3-2 AMS Network Jack

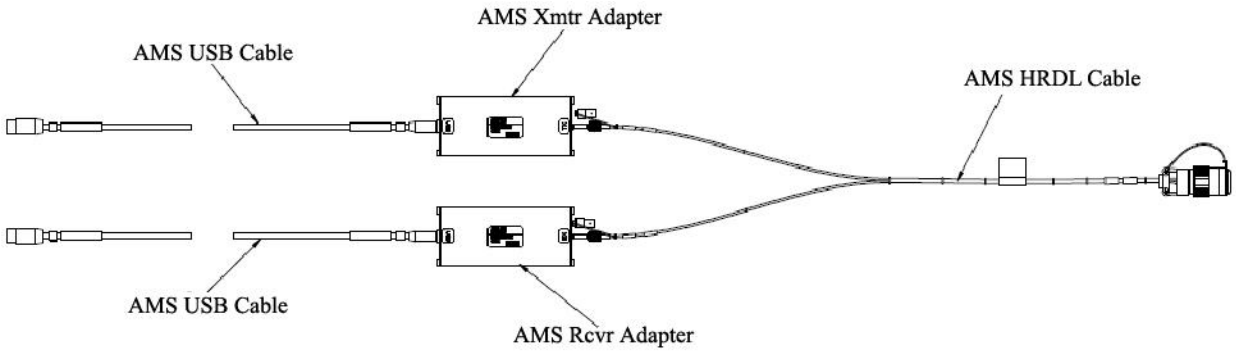

Figure 5.3-3 AMS Cable Kit (assembly)

5.3.4 AMS HRDL Cable

The AMS HRDL Cable is a fiber optic cable manufactured to ISS specifications in the JSC B36 Flight Fabrication Facility for interfacing with the ISS HRDL system. This fiber optic cable connects the AMS Transmitter Adapter and the AMS Receiver Adapter with ST fiber connectors to the HRDL data system P2 connector. The fiber cable is configured as a pair of fiber optic cables bundled in a physical "Y" configuration. The entire length of the AMS HRDL cable is covered in the bend limiting tubing to preclude damage to the fiber optic cable from making too tight a curve or kinking or being crushed.

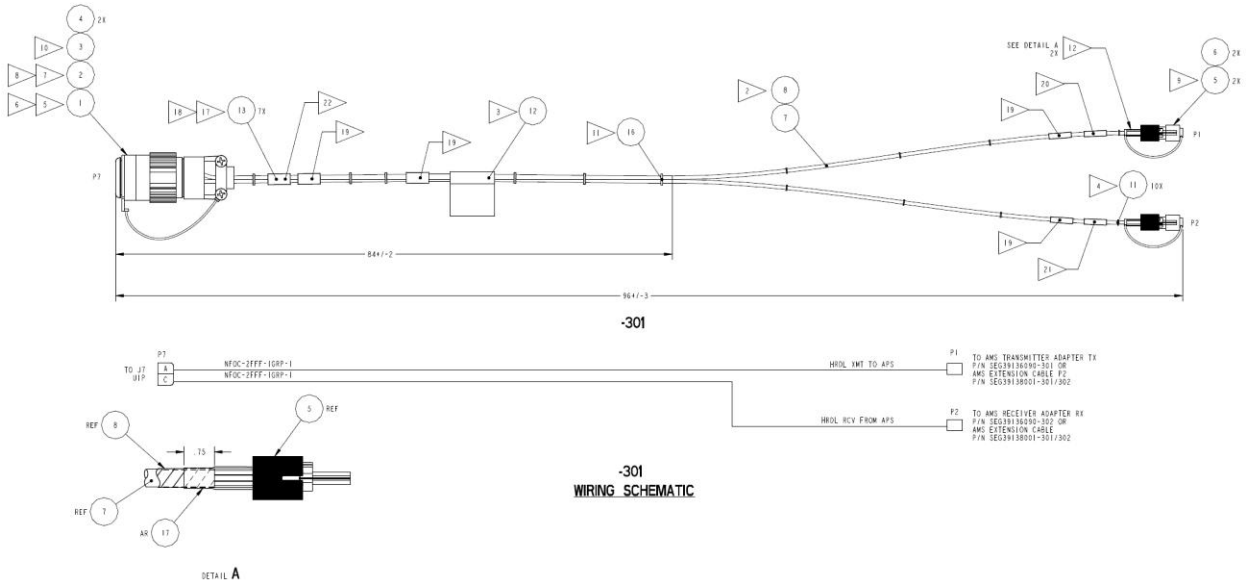

Figure 5.3-4 AMS HRDL Cable

5.3.5 AMS Adapters

The AMS Adapters cases are made of extruded aluminum housing with aluminum end caps, each cap secured by two fasteners installed in locking helicoil inserts. They enclose identical printed wire circuit (PC) boards, differing only in the software and firmware required to differentiate transmit and receive signals. The PC boards are slid into a supporting slot (Figures 5.1-3 and 5.3-5) in the extruded aluminum case. All power for the electronics derives from the standard USB interface with the T61p laptop. There are no user interfaces on this box, either to operate or indicate condition of the adapter, only cable interface ports. The USB type B

connector end of each adapter has a thin solid gasket made of copper-nickel-copper material to help mitigate EMI emissions between the housing edges and the endplate. The other side utilizes a ST style connector for fiber optics connection. The fiber optic transceiver utilizes LED sourced non-collimated light (not a laser) to generate signals for its fiber connection to the ISS HRDL. Velcro will be attached to the Adapters to secure them to the support assembly or other convenient location during operations. An example of the faceplace and installations screws is shown in Figure 5.3-6.

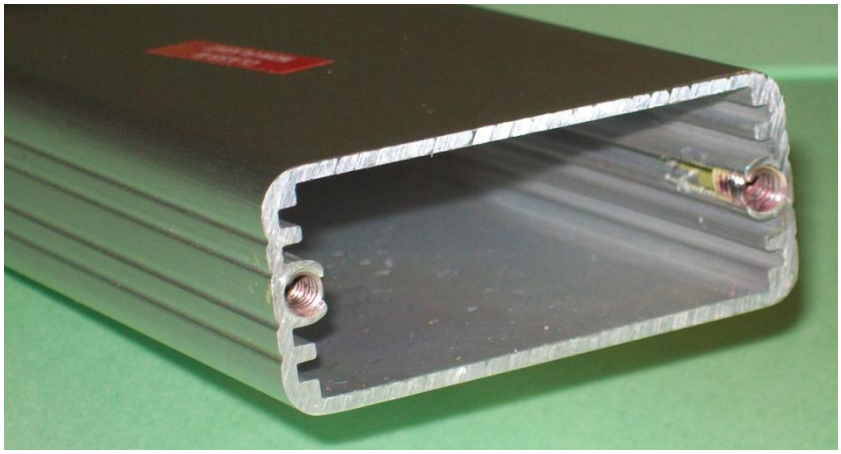

Figure 5.3-5 Extruded Aluminum Case Structure
(Class III Non-Flight)

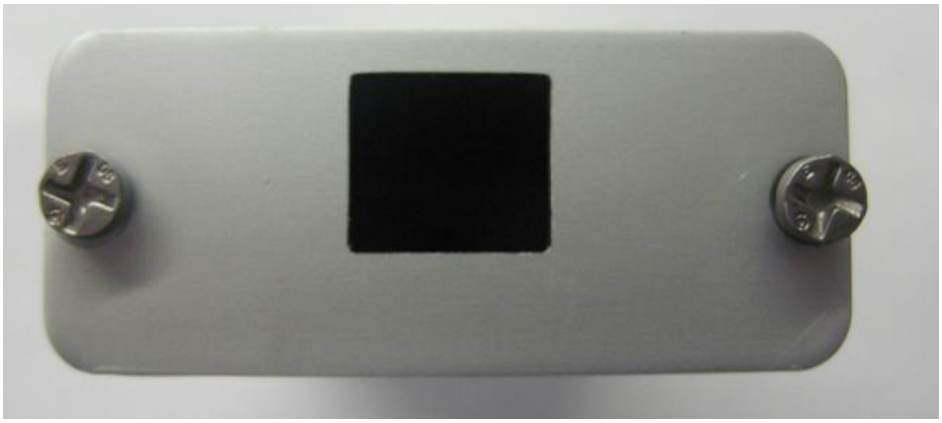

Figure 5.3-6 Adapter USB Faceplate with Flight-Like Screws

5.3.5.1 AMS Xmtr Adapter

The AMS Xmtr (transmitter) Adapter, shown in Figure 5.3-7, takes USB signals from the T61p laptop computer and converts them to fiber optic signals for transmission through the HRDL Cable to the external AMS.

Figure 5.3-7 AMS Xmtr Adapter

5.3.5.2 AMS Rcvr Adapter

The AMS Rcvr (receiver) Adapter, shown in Figure 5.3-8, receives fiber optic signals through the HRDL Cable from the external AMS, and converts them to USB signals for transmission through the USB Cable to the T61p Laptop computer.

Figure 5.3-8 AMS Rcvr Adapter

5.3.6 AMS USB Cable

The USB Cables are COTS AMS USB Cables and connect the AMS Xmtr Adapter and the AMS Rcvr Adapter to the T61p Laptop computer. The cables are wrapped with clear Teflon tape and properly labeled to qualify as Class 1 flight hardware.

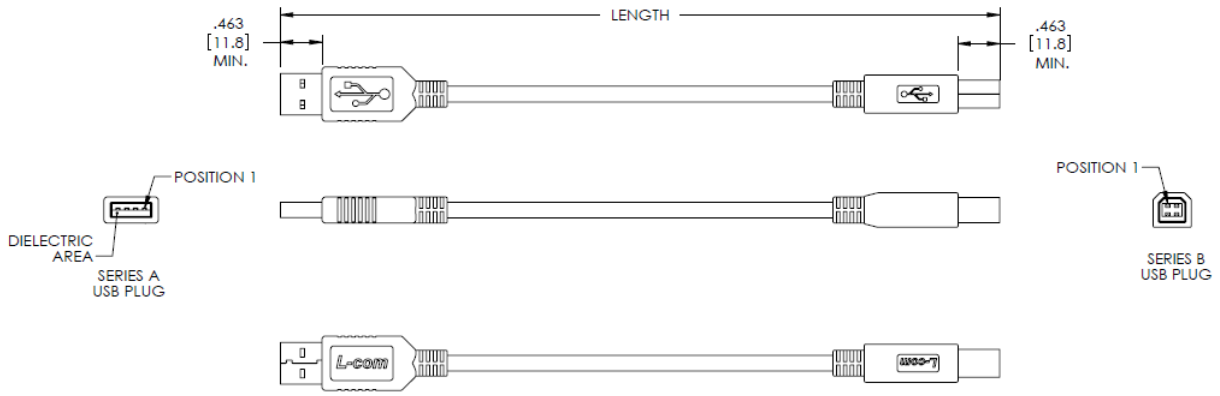

Figure 5.3-9 AMS USB Cable (A-B USB Cable)

5.3.7 AMS Short Extension Cable

The AMS Short Extension Cable is a 6 foot extension cable in the case that the AMS-02 ISS DDRS must be relocated or if an alternate HRDL connection point must be used due to on-orbit condition. This cable interfaces between the AMS HRDL cable and the AMS Transmitter Adapter and AMS Receiver Adapter. The fiber optic cable is fitted with ST connector and sockets, and manufactured in the JSC B36 Flight Manufacturing Facility (FMF) according to ISS fiber optic cable standards. The length of the cable is covered with bend limiting tubing.

5.3.8 AMS Long Extension Cable

The AMS Long Extension Cable is a 40 foot extension cable in the case that the AMS-02 ISS DDRS must be relocated or if an alternate HRDL connection point must be used due to on-orbit condition. This cable interfaces between the AMS HRDL cable and the AMS Transmitter Adapter and AMS Receiver Adapter. The fiber optic cable is fitted with ST connector and sockets, and manufactured in the JSC B36 Flight Manufacturing Facility (FMF) according to ISS fiber optic cable standards. The length of the cable is covered with bend limiting tubing and clear Teflon tape

5.3.9 AMS HD (Kit) Bag

The AMS HD Bag provides protection and storage for the 'spare' hard drives during transportation and on-orbit. It consists primarily of nomex material with pockets to hold up to 10 hard drives, and is secured closed with velcro patches and a strap with a velcro attach point. The 'kit' consists of the bag, 7 AMS 500GB HDs, and 3 AMS 750GB HDs. Figures 5.3-10 and 5.3-11 show the HD Bag with hard disk inserted in both unfolded and folded configurations. Hard disks will be stored within ISS provided antistatic bags.

Figure 5.3-10 AMS HD Bag with hard disks drives installed

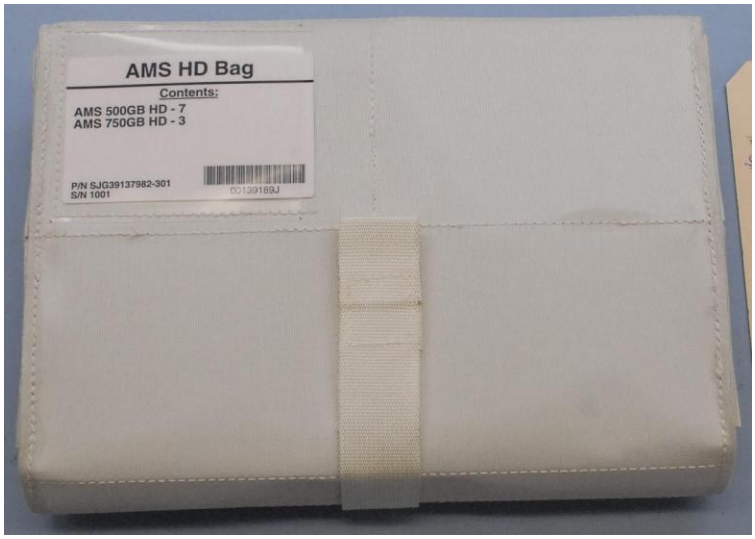

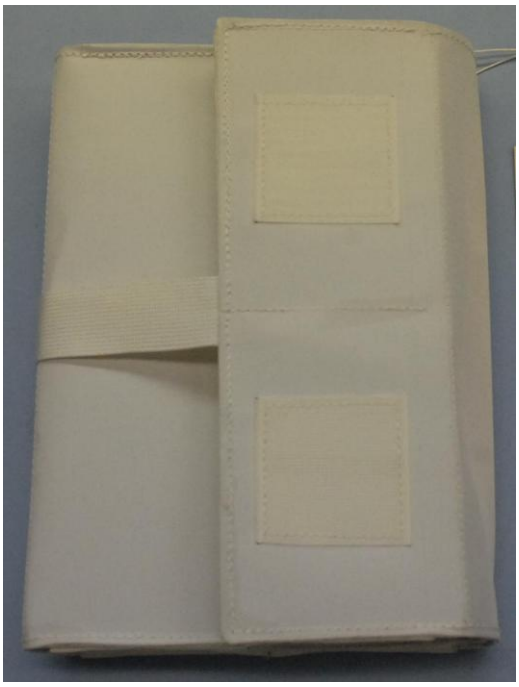

Figure 5.3-11 AMS HD Bag filled and folded for storage

5.3.10 AMS Hard Disk Drives

The ISS DDRS will utilize two different types of hard drives that will be installed into the T61p Ultrabay. The drives are a 500GB Hitachi drive and a 750GB Western Digital drive. Both types

of drives will be configured for easy installation and removal in the Ultrabay adapter. Figure 5.3-12 shows the configuration for installation in the Ultrabay with a metal cover plate installed.

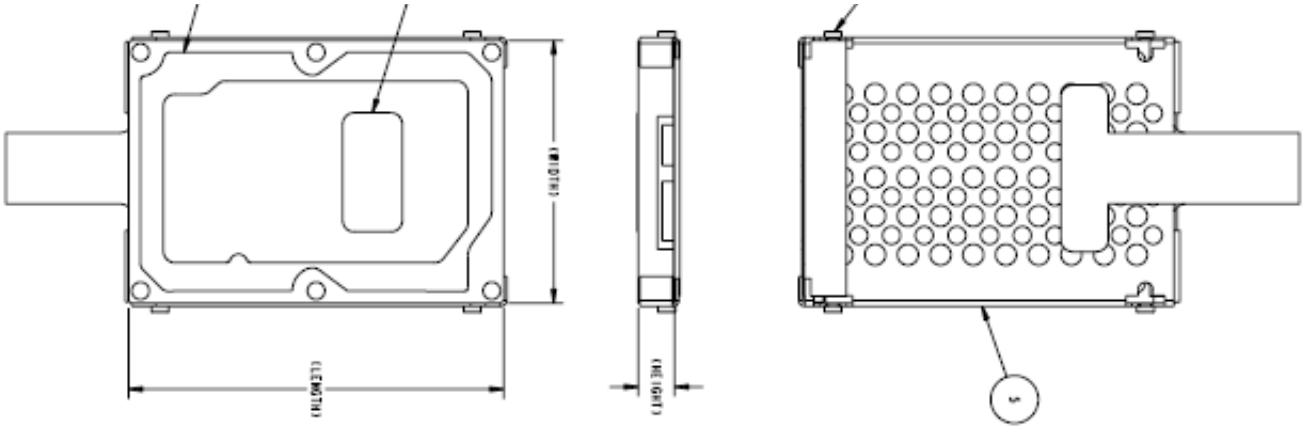

Figure 5.3-12 Hard Disk Configuration to Install in Ultrabay

5.3.10.1 AMS 500GB Hard Drive

The AMS 500GB Hard Drive is a Hitachi HTS725050A9A364 COTS Serial Advanced Technology Attachment (SATA) hard disk drive that can readily be installed in the T61p Ultrabay adapters for installation into the T61p laptops. Hard drives meet industry standards for physical and electrical interfaces. This drive operates at 7200 revolutions per minute (RPM), operates on 5 VDC (±5%) and draws a maximum of 5.5 W peak at startup, 2.0 W during seeks, 1 W during active idle and 0.2 W during standby. This drive has been independently reviewed and has consumer safety certification among a number of countries' approval for safety and product conformity. ISS provided cover plates have been installed on these drives prior to flight. These hard disk drives are shown in Figure 5.3-13.

Figure 5.3-13 Hitachi 500 GB Hard Disk Drive

5.3.10.2 AMS 750GB Hard Drive

The AMS 750GB Hard Drive is a Western Digital WD7500BPVT COTS SATA hard disk drive that can readily be installed in the T61p Ultrabay adapters for installation into the T61p laptops. Hard drives meet industry standards for physical and electrical interfaces. This drive operates at 5400 RPM, operates on 5 VDC (±10%) draws a maximum of 5 W at startup and draws 1.6 W during seeks, 0.65 W during active idle and 0.2 W during standby. This drive has been independently reviewed and has consumer safety certification among a number of countries'

approval for safety and product conformity. ISS provided cover plates have been installed on these drives prior to flight. These hard disk drives are shown in Figure 5.3-14.

Figure 5.3-14 Western Digital 750 GB Hard Disk Drive

6. AMS-02 ISS DDRS Operations

The AMS-02 external payload is continuously operational (24 / 7 / 365), with nominal monitor and control performed by the ground-based AMS Payload Operations Control Center (POCC), which is located at JSC MCC-H for STS-134, then migrates to CERN in Geneva Switzerland after 3 months. The AMS-02 payload generates an average of 6 Mbits of data per second, which is routed on ISS using the fiber-optic based High Rate Data Link (HRDL) and transmitted to the ground via the ISS Ku-band system. The nominal AMS-02 Ku downlink transmission rate is ~27 Mbit/sec to account for Ku resource allocation / availability.

The AMS-02 payload data is "First In, First Out" (FIFO) and once the data is shipped, it no longer exists should it be lost or corrupted. The intent of ISS DDRS is to provide a recording of the critical health and science data as close to the source as possible. This recording will be performed in parallel with Ku downlink. Once the POCC has determined that a portion of the Ku-system down-linked data has been lost or corrupted, the POCC (nominally) or the crew (in contingency) can command the ISS DDRS to playback that particular portion of the recorded data. The ISS DDRS playback communications path is also the ISS HRDL and Ku-system down-link.

Flight procedures associated with the ISS DDRS are listed and described below:

Crew Procedure	Description	Intent
Set-up & activation	• Configure AMS Laptop and cables • Power up and launch software	• Nominal for Increment 25 • Contingency for troubleshooting
Ghost Load	Transfer new ISS DDRS software to AMS Laptop using flight media	Contingency for software update loads
Hard Disk	Remove AMS Laptop T61p Ultrabay Adaptor and replace AMS Hard Disk Changeout	Periodic nominal ops for hard disk durability (no down-mass)
Crew Monitor and Command	Using AMS Laptop Graphic User Interface display and space-to-ground communications with the AMS ground-based POCC: • Relay payload status information to POCC sceientists • Enter POCC provided command sequences to be relayed to AMS	Contingency procedures for extended comm outages between the external payload and the AMS ground-based POCC

The ISS DDRS allows for contingency crew monitor of payload status and contingency crew commanding (pre-loaded commands that are not safety related) of the AMS-02 external payload systems via Graphical User Interface (GUI), based upon procedures, flight notes or S/G voice-loop. These activities are foreseen as follows:

- Use in AMS-02 on-orbit data flow simulation and path check-out following ULF-5 AMS Laptop set-up and activation.
- Crew monitor of AMS-02 external payload data flow and system health during initial payload activation on ULF-6.
- Crew command and monitor of the AMS-02 external payload should the ISS S-Band (payload command uplink and critical health data downlink) or the Ku-System (high rate payload data downlink) communications paths be lost or unavailable for extended durations.

Typically, the payload systems monitoring would include basic critical health parameters, as viewed on a GUI display screen, and the GUI button-click style commanding would be basic

commands to secure the payload until POCC communications are restored. Hard disk swap-out will be performed periodically by the crew to extend the life of the hard-disks; the disks will not be nominally returned from on-orbit. Hard Disk swaps will utilize the Ultrabay feature of the T61p laptops and the standard procedures for accomplishing this task which includes the capability of swapping drives without depowering the laptop.

The current manifest has the AMS Laptop and associated hardware flying in a mid-deck locker on the STS-133 / ULF-5 mission, and transfer it to the ISS. The crew will install the hardware as shown in Figures 5.1-1 and 5.1-2. Current topology shows this installation at US Lab Express Rack 6 where it will remain, typically with lid closed and support arm folded to a convenient location. If required, the crew will also use this opportunity to perform an ISS DDRS software "ghost-load" update using flight media (DVD).

7. Safety Summary

The AMS-02 ISS DDRS is a combination of AMS-02 Project provided hardware and ISS provided hardware. The AMS-02 Project has worked with the ISS Program in updating the T61p laptop, a Criticality 1 piece of ISS hardware for the AMS-02 to utilize it as Criticality 3 for hardware and function. The ISS Program (OD) has undertaken the task to update the necessary GCAR to reflect the AMS-02 application specifics with the required AMS-02 Project inputs. This is not covered in this safety data package, but covered under the ISS GFE process. The AMS-02 is utilizing the ISS provided GFE in accordance with the requirements and limitations that the ISS has dictated through their hardware certifications.

Hardware is be extremely simple to assess:

- No structures apart from the adapter box, which has been analyzed to large factors of safety.
- Adapter boxes will be assembled and tested at JSC.
- All items use standard aerospace materials.
- System tested for EMI performance.
- DDRS Adapter Boxes powered from T61p laptop USB port, T61p powered by Express rack and laptop battery – all GFE.
- Electrical power connectors (to ExPRESS rack) are all standard – P7 connector is GFE.

7.1 Safety Analysis and Identified Hazards

The ISS DDRS has been reviewed by Energy Flow/Barrier Analysis methodology and Standardized hazard review.

The Energy Flow/Barrier Analysis did not identify any source or storage of energy sufficient to create a unique hazard. The standard GFE has been previously assessed and not included directed in this analyses, all interfaces utilize low power USB connections and optic interfaces. Optical power is non-collimated and low energy.

The standard hazard review indicated the potential for a number of hazards, these have all been addressed on the standard JSC Form 1230 hazard report form.

7.1.1 Structural Failure

The ISS DDRS is soft stowed for ascent on the Space Shuttle. It will me weight, dimension and CG requirements for the stowage allotments provided.

While on the ISS and operating the active components will be structurally mounted to the Desk Top Plate Assembly and the Multi-Use Bracket Assembly, previously certified GFE used for supporting the GFE T61p laptop. The soft structural interface of the Adapter boxes will be made with Velcro to the GFE or convenient surface. Non-operational equipment will be in available stowage until needed.

7.1.2 Sealed Containers

The ISS DDRS make no use of sealed containers. This hazard is not applicable.

7.1.3 Vented Containers

The electronics enclosures of the ISS DDRS have been analyzed and shown to have insufficient volume to constitute a hazard due to pressure differential across the enclosures. All enclosures are vented (not sealed) and contain no hazardous materials that would be released in the event of a low pressure/vacuum environment.

7.1.4 Sharp Edges, Corners and Protrusions

The ISS DDRS has been constructed with the concern for sharp edges and corners in mind. All corners have been rounded and edges broken to preclude contact hazards. The equipment will be inspected to demonstrate compliance with the NASA-STD-3000/SSP-50005 standards.

7.1.5 Shatterable Material Release

The only frangible materials associated with the ISS DDRS are the fiber optics and fiber optics interfaces with the HRDL system of the ISS. All cables will be constructed in accordance with ISS standards and will have sealed fiber cable ends and properly jacketed fibers to preclude release.

7.1.6 Flammable Materials.

A flammability assessment of the ISS DDRS shows that all materials used are either non-flammable or used in an acceptable quantity and application to not constitute a fire threat.

7.1.7 Materials Offgassing

The ISS DDRS will be offgas tested and meet the standards of NASA STD 6001.

7.1.8 RF Radiation

The ISS DDRS does not intentionally transmit or receive RF signals. EMI/EMC testing indicated an exceedence and the design was modified to include a gasket material to “seal” the RF exposure of the Adapters. Testing subsequent to the inclusion of the gasket material showed the Adapters passing all EMI/EMC testing.

7.1.9 Lasers

The ISS DDRS does not contain any laser source. This hazard is not applicable.

7.1.10 Batteries

The only batteries associated with the ISS DDRS are in the GFE T61p Laptop and used entirely within the GFE certification for that hardware. There are no batteries on the payload provided ISS DDRS hardware. This hazard is not applicable.

7.1.11 Touch Temperature

The ISS DDRS payload provided hardware have been analyzed and shown that they will remain under touch temperature limits during operations. The use of the GFE hardware will be consistent with their certifications and will not adversely affect their touch temperature certifications. The PO provided hard disks will be handled in the same manner as the GFE certified hard disks for exchange and do not constitute a touch temperature concern.

7.1.12 Electrical Power Distribution

The ISS DDRS Payload provided hardware is powered through the T61p laptop. All interfaces of the T61p to the ISS systems are made through GFE certified connections that the ISS DDRS does not modify. The power interfaces are made through the standard power port for the ISS DDRS hard disks and through the T61p USB connections. All are internally current limited by the laptop and cannot propagate a failure to the ISS vehicle systems. All grounding/bonding interfaces are made through these standardized connections.

7.1.13 Ignition of Flammable Atmospheres of the Payload Bay

The ISS DDRS does not fly in the payload bay and the payload provided hardware is unpowered in its storage location during ascent. This hazard is not applicable.

7.1.14 Rotating Equipment

The ISS DDRS payload provided hardware utilizes hard disk drives that utilize spinning platens within the hard disk enclosure. These are common industry standard hard disks and do not pose a unique threat to the ISS or the crew.

7.1.15 Mating/Demating of Powered Connectors

The ISS DDRS utilizes the GFE T61p hardware that will interface with the ExPRESS Rack power and will be utilized in accordance with it's existing certification and procedures for mating and demating that power. The Payload Provided electrical cables and equipment utilize low voltage low current connections at either a signal level or USB power levels (5V, 0.5 A max).

7.1.16 Blocking Crew Egress from Module.

The location of the ISS DDRS on the ExPRESS Rack does not intrude into egress paths nor are any of the cables of the ISS DDRS to be routed through a hatch.

7.1.17 Release of Material

The ISS DDRS contains no materials that pose a toxicological, biological or ECLSS impact. This hazard is not applicable.

7.1.18 Galvanic Corrosion

The gold plated EMI shield gasket and the 6063-T6 aluminum alloy of the transmitter and receiver adapter enclosures have an identified galvanic potential. This has been assessed as being acceptable and non-hazardous in MUA ESCG\ISS-281, "AMS Transmitter Adapter and Receiver Adapter, Alpha Magnetic Spectrometer 02 (AMS-02)," dated 8/10/2010.

7.2 Life Limited Parts

The AMS-02 ISS DDRS utilizes hard disks that have a mean time between failures on the order of 60,000 hours of operations based on terrestrial applications of the COTS components. All components are use and replace in accordance with standard hard disk exchange procedures for the T61p Ultrabay drives. The Transmitter Adapter and Receiver Adapters are also use until fail and replace. No maintenance or special operations are required to extend or as a consequence of component life limits.

7.3 Fire Detection and Suppression

The AMS-02 ISS DDRS is operated only while deployed in the habitable module in the aisle. The module area/aisle smoke detector and the crew (when present) will be the means of detecting a fire or pyrolysis event. The ISS DDRS components do not share airflow with any rack or subrack elements and does not have a dedicated fire event identification or notification system. The payload provided hardware does not utilize any force air flow but exists within the airflow nominally found in the crew environment within a habitable volume such as the U. S. Lab module.

Any need to suppress a fire associated with the ISS DDRS would be accomplished with an ISS Portable Fire Extinguisher with the wide area nozzle attached. JSC Form 1428, ISS DDRS FDS-01 has been prepared to reflect this configuration and control methodology and is provided in section 9.

7.4 Maintenance

The AMS-02 ISS DDRS payload provided components do not have any established regular maintenance. There is a planned exchange of hard disks on a regular basis, but this is a standard operational procedure for the GFE T61p with Ultrabay. Regular maintenance of GFE hardware is done in accordance with any requirements of the certified hardware. In the event of hardware fault, backup hardware is flown to exchange with the failed units, this constitutes in flight repair/replacement activities that follow the nominal installation/ deintegration procedures. There are no unique hazards associated with these tasks.

7.5 Operational Controls

The AMS-02 ISS DDRS does not utilize any identified operational controls as a consequence of the payload provided hardware or unique configuration.

7.6 Toxic Materials

The AMS-02 ISS DDRS does not utilize any Toxic Materials.

7.7 Batteries

The AMS-02 ISS DDRS does not utilize any batteries within its payload provided hardware. The ISS provided GFE T61p laptop has a dedicated COTS battery that is previously certified through the GFE process.

7.8 On-Orbit Verification/Reverification

There are no identified requirements for on-orbit verification or reverification with the ISS DDRS payload provided hardware.

7.9 Anomalies and Failures

7.9.1 EMI Testing

The AMS-02 ISS DDRS failed initial EMI testing and required a design modification to provide a thin solid gasket made of gold plated, copper-nickel-copper material to help mitigate EMI

emissions between the housing edges and the endplate. The unit passed testing after this modification was made.

7.10 Noncompliances

The AMS-02 ISS DDRS has no identified noncompliances.

7.11 Action items

The AMS-02 ISS DDRS has no outstanding action items from previous safety reviews.

7.12 GFE Certification

The ISS DDRS interfaces directly with a number of GFE items, these items have been reviewed to assure that the application of the ISS DDRS has not required alteration of the GFE nor alter or impact acceptance rational for GFE operations. The following table indicates the GFE potentially affected by ISS DDRS.

System Name	PartNumber	Part Name	GCAR	Rev	Close Date
T61P LAPTOP ASSY	SEG33120761-301	T61p ThinkPad Laptop Computer	G5787	D	07/22/10
T61P LAPTOP ASSY	SEG33120738-301	T61p 160GB Hard Disk Drive	G5787	D	07/22/10
T61P LAPTOP ASSY	SEG33120739-301	T61p Internal Battery	G5787	D	07/22/10
T61P LAPTOP ASSY	SEG33120741-301	T61P ULTRABAY ADAPTER	G5787	D	07/22/10
DESK TOP PLATE ASSY, INFLIGHT COMPUTER	SED33108703-304	DESK TOP PLATE ASSY, INFLIGHT COMPUTER	G5485	0	11/27/06
MULTIUSE BRACKET	SEG33107631-301	MULTIUSE BRACKET	G1724	A	11/06/06

Generic items that support these items have been reviewed and found that the application of the proximate GFE items, such as power cables, laptop power supplies, etc., have been reviewed and their operation is independent of the ISS DDRS application.

This document is under the Document Configuration Control of AMS
Printed hardcopy is for uncontrolled reference only.

8. Hazard Report(s)

1. STD-ISS DDRS-F01

FLIGHT PAYLOAD STANDARDIZED HAZARD CONTROL REPORT	A. NUMBER	B. PHASE	C. DATE
	STD- ISS-DDRS-01	I/II/III	

D. PAYLOAD, DTO, DSO or RME *(Include Part Number(s), if applicable)*	HAZARD TITLE	E. VEHICLE
ISS Digital Data Recording System (DDRS)	STANDARD HAZARDS	*Shuttle Delivery to ISS ULF5*

F. DESCRIPTION OF HAZARD:	G. HAZARD CONTROLS: *(complies with)*	H. APP.	I. VERIFICATION METHOD, REFERENCE, AND STATUS:
1. Structural Failure	Designed to meet the applicable requirements for standard locker or soft-stowed items for launch/landing as defined in SSP 57008 or equivalent IDD NSTS 21000-IDD-MDK.	☒	1.1.1 SVM: Inspection of As Built Design 1.1.1STATUS: Closed. ESCG Memorandum ESCG-4510-10-SES-MEMO-0026, "AMS-02 ISS DDRS Hazard Controls," dated September 30, 2010
2. Structural Failure of Sealed Containers	Sealed containers must be compliant with a) and b) in all cases: a) Be a single, independent container containing a non-hazardous substance. b) Contain less than 14,240 foot-pounds (19,310 Joules) of stored energy due to pressure. *AND* Additionally, one of either c), d) or e) must be met, depending on the MDP and verification method. c) Have a maximum delta pressure of 1.5 atmospheres (22 psia, 1.5 bars). *OR* d) Have an MDP greater than 1.5 atm (22 psia, 1.5 bars), but less than 6.81 atm (100 psia, 6.9 bars) and analysis or test showing minimum safety factor for the design is 2.5 X MDP. *OR* e) Have an MDP greater than 1.5 atm (22 psia, 1.5 bars), but less than 6.81 atm (100 psia, 6.9 bars) and each flight unit pass a proof test to 1.5 X MDP.	☐ ☐ ☐ ☐ ☐ ☐	N/A

APPROVAL	PAYLOAD ORGANIZATION	SSP/ISS
PHASE I		
PHASE II		
PHASE III	TREAU MARTIN 6/20/10	

JSC Form 1230 (Rev August 10, 2010) (MS Word July 1996)

FLIGHT PAYLOAD STANDARDIZED HAZARD CONTROL REPORT	A. NUMBER	B. PHASE	C. DATE
	STD- ISS-DDRS-01	I/II/III	

D. PAYLOAD, DTO, DSO or RME *(Include Part Number(s), if applicable)*	HAZARD TITLE	E. VEHICLE
ISS Digital Data Recording System (DDRS)	STANDARD HAZARDS	***Shuttle Delivery to ISS ULF5***

F. DESCRIPTION OF HAZARD:	G. HAZARD CONTROLS: *(complies with)*	H. APP.	I. VERIFICATION METHOD, REFERENCE, AND STATUS:
3. Structural Failure of Vented Containers	Vented enclosures are not intentionally-sealed and will not create a hazard in the event of depressurization or repressurization of the surrounding volume as verified by at least one of the following: a) Contains less than 3,063 foot-pounds (4,152 J) of stored energy due to pressure in the event of vent(s) failure *Note: Calculation of the stored energy potential can be found in NASA-HDBK-5010, Appendix. G.* b) Vents are sized to maintain a minimum FOS of 1.5 for pressure loads when assessed against depressurization/repressurization rates in SSP 57000, SSP 57008, or the equivalent ICD/IDD_____) c) Provides an internal volume to effective vent area ratio that results in a differential pressure loading of no greater than 0.01 psid. *Note: Maximum Effective Vent Ratio (MEVR) for a 0.01 psid pressure differential is defined as:* _____	☒ ☐ ☐	3.a.1 SVM: Analysis of ISS DDRS enclosures for energy storage capability in excess of 3063 ft lbs 3.a.1 STATUS: Closed, Analysis of energy content attached to hazard report *Note: Include a listing of the vented container(s) as an attachment.*

FLIGHT PAYLOAD STANDARDIZED HAZARD CONTROL REPORT	A. NUMBER	B. PHASE	C. DATE
	STD- ISS-DDRS-01	I/II/III	

D. PAYLOAD, DTO, DSO or RME *(Include Part Number(s), if applicable)*	HAZARD TITLE	E. VEHICLE
ISS Digital Data Recording System (DDRS)	STANDARD HAZARDS	***Shuttle Delivery to ISS ULF5***

F. DESCRIPTION OF HAZARD:	G. HAZARD CONTROLS: *(complies with)*	H. APP.	I. VERIFICATION METHOD, REFERENCE, AND STATUS:
4. Sharp Edges, Corners, and/or Protrusions	Meets the intent of one or more of the following: a) NASA-STD-3000 / SSP 50005. b) NSTS 07700 Volume 14, Appendix 7 (EVA hardware). c) NSTS 07700 Volume 14, Appendix 7(IVA hardware)/ SSP 57000. d) SSP 41163, Paragraph 3.3.6.12.3 (EVA)/ SSP 41163, Paragraph 3.3.6.12.4 (IVA).	☒ ☐ ☐ ☐	4.a.1 SVM: Sharp Edge, Corners and/or Protrusion inspection of as built hardware 4.a.1 STATUS: Closed. Human Factors Implementation Team (HFIT) Hardware Certificate of Compliance for AMS-02 ISS DDRS, 10/6/2010
5. Shatterable Material Release	Meets all that apply: a) All materials are contained. b) Optical glass (i.e. lenses, filters, etc.) components of crew cabin experiment hardware that are non-stressed (no delta pressure) and have passed both a vibration test at flight levels and a post-test visual inspection. c) Shuttle payload bay hardware shatterable material components that weigh less than 0.25 lb (113g) and are non-stressed (no delta pressure) or non-structural.	☒ ☐ ☐	5.a.1 SVM: Inspection, all fiber optic cables and interfaces contained per TPS Build 5.a.1 STATUS: Closed. JSC TPS No 2A1020182, "Fabricate HRDL Cable Assembly P/N SEG39136091-301 S/N 1001 (CI)," 9/20/2010, JSC TPS 2A1020183, "Fabricate HRDL Cable Assembly SEG39136091-301 S/N 1002 (CI)," 9/23/2010, JSC TPS 2A1020148, "Fabricate Extension Cable Assemblies P/N SEG3913800-301 S/N 1001 (CI) and 1002 (CI)," 9/28/10, JSC TPS 2A1020149, "Fabricate Extension Cable Assemblies P/N SEG39138001-302 S/N 1003 (CI) and 1004 (CI)," 10/5/2010 *Note: Include a listing and figure(s) of shatterable material(s) as an attachment.*
6. Flammable Materials	Meets one or more of the following: a) A-rated materials selected from MAPTIS or applicable IP materials process. b) Flammability assessment per NSTS 22648, JSC 29353, or applicable International Partner materials process.	☐ ☒	6.b.1 SVM: JSC/ES4 approval of materials usage 6.b.1 STATUS: Closed. MATL-10-065A, "Alpha Magnetic Spectrometer (AMS-02) ISS Digital Data Recording System (DDRS)," dated 10/15/2010

FLIGHT PAYLOAD STANDARDIZED HAZARD CONTROL REPORT	A. NUMBER	B. PHASE	C. DATE
	STD- ISS-DDRS-01	I/II/III	

D. PAYLOAD, DTO, DSO or RME *(Include Part Number(s), if applicable)*	HAZARD TITLE	E. VEHICLE
ISS Digital Data Recording System (DDRS)	STANDARD HAZARDS	***Shuttle Delivery to ISS ULF5***

F. DESCRIPTION OF HAZARD:	G. HAZARD CONTROLS: *(complies with)*	H. APP.	I. VERIFICATION METHOD, REFERENCE, AND STATUS:
7. Materials Offgassing	Meets one or more of the following: a) Offgassing tests of assembled article per NASA-STD-6001. b) Offgassing evaluation per: MSFC-HDBK-527/JSC or MAPTIS.	☒ ☒	7.a.1 SVM: Acceptance of offgassing test results for transmitter and receiver adapter boxes. 7.a.1 STATUS: Closed. MATL-10-065A, "Alpha Magnetic Spectrometer (AMS-02) ISS Digital Data Recording System (DDRS)," dated 10/15/2010 7.b.1 SVM: Acceptance of offgassing analysis for hardware other than transmitter and receiver adapter boxes. 7.b.1 STATUS Closed. MATL-10-065A, "Alpha Magnetic Spectrometer (AMS-02) ISS Digital Data Recording System (DDRS)," dated 10/15/2010
8. Nonionizing Radiation 8.1 Non-transmitters	Meets all that apply: a) Meets ICD-2-19001, 10.7.3.2.2 EMI compatibility testing. *AND/OR* b) Meets SSP 30238 EMI compatibility testing.	☐ ☒	8.1.b.1 SVM: EMI Testing 8.1.b.1 STATUS: Closed. EV5-10-EMC-019R, "EMI/EMC Test Report Certification of the Alpha Magnetic Spectrometer (AMS) Transmitter and Receiver Adapters," dated August 31, 2010 *Note: Specify all ICD-2-19001, Section 20 and ISS/EMEP approved TIA exceedances in verification section.*

FLIGHT PAYLOAD STANDARDIZED HAZARD CONTROL REPORT	A. NUMBER	B. PHASE	C. DATE
	STD- ISS-DDRS-01	I/II/III	

D. PAYLOAD, DTO, DSO or RME *(Include Part Number(s), if applicable)*	HAZARD TITLE	E. VEHICLE
ISS Digital Data Recording System (DDRS)	STANDARD HAZARDS	***Shuttle Delivery to ISS ULF5***

F. DESCRIPTION OF HAZARD:	G. HAZARD CONTROLS: *(complies with)*	H. APP.	I. VERIFICATION METHOD, REFERENCE, AND STATUS:
8.2 Lasers	Meets all that apply: a) Classified as as a Class 1 and/or Class 2 laser, as defined in ANSI Z136.1-2007 (as measured at the source). b) The radiant exposure, H, or irradiance, E, at the ISS crewmember's eye or on the crewmember's skin for laser source shall not exceed the maximum permissible exposure (MPE) as defined in ANSI Z136.1-2007. c) Optical magnification equipment on board ISS that could be used to view a laser source or its specular reflection shall be considered in any ocular hazard analysis.	☐ ☐ ☐	N/A *Note: Include the manufacturer laser data sheet(s) as an attachment.* *Note: Lasers operating at class 1M, 2M, 3R, 3B and 4 meeting ANSI Z136.1 -2007 and ANSI Z136.4-2005 shall be documented on a unique hazard report.*
9. Battery Failure	Meets all that apply:		N/A
9.1 Alkaline cells and batteries *Notes:* • *Up to 12 V* • *Up to 60 Watt-hours capacity* • *No potential charging source* • *Cells not in gas-tight compartment.*	Cells and batteries pass acceptance tests that include: a) Loaded and open circuit voltage measurements. b) Visual examination. c) Leakage check under vacuum (e.g. 6 hours at 0.1 psia).	☐	N/A *Note: Include confirmation of test completion and approval of Form-03 by JSC\EP5.*

FLIGHT PAYLOAD STANDARDIZED HAZARD CONTROL REPORT	A. NUMBER	B. PHASE	C. DATE
	STD- ISS-DDRS-01	I/II/III	

D. PAYLOAD, DTO, DSO or RME *(Include Part Number(s), if applicable)*	HAZARD TITLE	E. VEHICLE
ISS Digital Data Recording System (DDRS)	STANDARD HAZARDS	***Shuttle Delivery to ISS ULF5***

F. DESCRIPTION OF HAZARD:	G. HAZARD CONTROLS: *(complies with)*	H. APP.	I. VERIFICATION METHOD, REFERENCE, AND STATUS:
9.2 Primary button cells: e.g. - Li-(CF)x, Li-iodine, LiV_2O_5, $LiMnO_2$, Ag-Zn Rechargeable button cells: e.g. - LiV_2O_5, Li-ion, Ni-Cd, Ni-MH, Ag-Zn cells *Notes:* • *Battery capacity ≤ 300 mAh* • *Less than 3 cells per common circuit* • *Cells not in gas-tight compartment.*	Cells and batteries pass acceptance tests that include: a) Loaded and open circuit voltage measurements. b) Visual examination. *c)* Leakage check under vacuum (e.g. 6 hours at 0.1 psia). *Note: For button cells soldered to a circuit board, only a functional check of the battery in the equipment is required.*	☐	N/A *Note: Include confirmation of test completion and approval of Form-03 by JSC\EP5.*
9.3 COTS Rechargeable NiMH, NiCd & Ag/Zn batteries *Note:* • *Batteries for IVA use up to 20 V and 60 Wh*	Batteries purchased in one lot and pass flight acceptance tests that include, as a minimum: a) Loaded and open circuit voltage measurements. b) Visual examination. c) Vibration to workmanship levels. d) Leakage check under vacuum. (e.g. 6 hours at 0.1 psia). e) Charge/discharge cycles before and after vibration and vacuum testing.	☐	N/A *Note: Include confirmation of test completion and approval of Form-03 by JSC\EP5.*

FLIGHT PAYLOAD STANDARDIZED HAZARD CONTROL REPORT	A. NUMBER	B. PHASE	C. DATE
	STD- ISS-DDRS-01	I/II/III	

D. PAYLOAD, DTO, DSO or RME *(Include Part Number(s), if applicable)*	HAZARD TITLE	E. VEHICLE
ISS Digital Data Recording System (DDRS)	STANDARD HAZARDS	***Shuttle Delivery to ISS ULF5***

F. DESCRIPTION OF HAZARD:	G. HAZARD CONTROLS: *(complies with)*	H. APP.	I. VERIFICATION METHOD, REFERENCE, AND STATUS:
9.4 COTS rechargeable Li-ion batteries *Note:* • *Batteries for IVA use up to 10 V and 60 Wh*	Batteries purchased in one lot and pass flight acceptance tests that include, as a minimum: a) Loaded and open circuit voltage measurements. b) Visual examination. c) Vibration to environment or 2X workmanship level, whichever is higher. d) Leakage check under vacuum (e.g. 6 hours at 0.1 psia). e) Functional check (i.e. charge/discharge cycles) before and after vibration and vacuum.	☐	N/A *Note: Include confirmation of test completion and approval of Form-03 by JSC\EP5.*
10. Touch Temperature	Meets all that apply, all payload accessible surfaces: a) Are within IVA touch temperature range of –18 Degrees C. (0 Degrees F) and 49 Degrees C (120 Degrees F). a1) For systems with active thermal management: Design contains a single fault tolerant design to not exceed touch temperature limits. a2) For systems with no active thermal management: Design is incapable of exceeding touch temperature limits. a3) For surfaces exceeding touch temperature limits: Acceptability of those higher temperatures has been determined using the formula within letter MA2-95-048 “Limits for Intravehicular Activity (IVA) Touch Temperatures”, which considers thermal properties of the involved materials. b) Meet EVA touch temperature criteria of NSTS 07700 Volume 14, Appendix 7.	 ☐ ☒ ☐ ☐	10.a2.1 SVM: Touch Temperature Anaylsis/Testing 10.a2.1 STATUS: Closed. ESCG Memorandum ESCG-4470-10-TEAN-DOC-0130, “Touch Temperature Analysis for Alpha Magnetic Spectrometer (AMS-02) ISS Digital Data Recording System (DDRS),” dated September 2, 2010

FLIGHT PAYLOAD STANDARDIZED HAZARD CONTROL REPORT	A. NUMBER	B. PHASE	C. DATE
	STD- ISS-DDRS-01	I/II/III	

D. PAYLOAD, DTO, DSO or RME *(Include Part Number(s), if applicable)*	HAZARD TITLE	E. VEHICLE
ISS Digital Data Recording System (DDRS)	STANDARD HAZARDS	***Shuttle Delivery to ISS ULF5***

F. DESCRIPTION OF HAZARD:	G. HAZARD CONTROLS: *(complies with)*	H. APP.	I. VERIFICATION METHOD, REFERENCE, AND STATUS:
11. Electrical Power Distribution	Meets all that apply: IVA Payloads: a) For Shuttle-powered payloads: Meets all circuit protection requirements of letter TA-92-038 and bonding and grounding requirements in NSTS 37330. b) For ISS-powered payloads: Meets station interface circuit protection requirements of SSP 57000 or applicable module ICD, payload circuit protection requirements of letter TA-92-038, and bonding and grounding requirements per SSP 30240 and SP 30245. EVA Payloads less than 32 volts: c) For Shuttle-powered payloads: Meets all circuit protection and wire sizing requirements of letter TA-92-038. d) For ISS-powered payloads: Meets station interface circuit protection requirements of SSP 57003 or applicable module ICD, payload circuit protection and wire sizing requirements of letter TA-92-038.	☐ ☒ ☐ ☐	11.b.1 SVM: Review of Design 11.b.1 STATUS: Closed. ESCG-4295-10-ADV SY-MEMO-0041, "AMS-02 ISS DDRS Electrical Power Distribution and Mating/Demating of Powered Connectors," dated September 21, 2010 *Note: Include circuit protection wire sizing, bonding and grounding diagrams as an attachment.* *Note: Payloads with voltages above 32 volts shall be documented on a unique hazard report.*

FLIGHT PAYLOAD STANDARDIZED HAZARD CONTROL REPORT	A. NUMBER	B. PHASE	C. DATE
	STD- ISS-DDRS-01	I/II/III	

D. PAYLOAD, DTO, DSO or RME *(Include Part Number(s), if applicable)*	HAZARD TITLE	E. VEHICLE
ISS Digital Data Recording System (DDRS)	STANDARD HAZARDS	***Shuttle Delivery to ISS ULF5***

F. DESCRIPTION OF HAZARD:	G. HAZARD CONTROLS: *(complies with)*	H. APP.	I. VERIFICATION METHOD, REFERENCE, AND STATUS:
12. Ignition of Flammable Atmospheres in Payload Bay	Meets the following for Shuttle launch, entry, landing, and post landing mission phases: a) Hardware is unpowered and all payload surfaces are below 352°F. *AND* b) Hardware MLI is grounded per ICD 2-19001.	☐ ☐	N/A
13. Rotating Equipment	Rotating equipment meets both of the following: a) Enclosure has obvious containment capabilities. b) Rotating part does not exceed 8 inches (200 mm) in diameter and 8000 revolutions per minute (rpm) speed in all conditions. *OR* c) Computer Hard Disk Drive structure/enclosure is unmodified and HDDs are industry/safety certified (Example: UL, IEC, CE ratings).	☐ ☐ ☒	13.c.1 SVM: Inspection of Flight Hardware 13.c.1 STATUS: Closed. ESCG Memorandum ESCG=4530-10-GFESEI-MEMO-0025, "AMS-02 ISS DDRS Safety Data Pack: Hazard Verification 13.c.1 Rotating Equipment," dated September 22, 2010 *Note: Include listing of rotating equipment as an attachment.*

FLIGHT PAYLOAD STANDARDIZED HAZARD CONTROL REPORT	A. NUMBER	B. PHASE	C. DATE
	STD- ISS-DDRS-01	I/II/III	

D. PAYLOAD, DTO, DSO or RME *(Include Part Number(s), if applicable)*	HAZARD TITLE	E. VEHICLE
ISS Digital Data Recording System (DDRS)	STANDARD HAZARDS	***Shuttle Delivery to ISS ULF5***

F. DESCRIPTION OF HAZARD:	G. HAZARD CONTROLS: *(complies with)*	H. APP.	I. VERIFICATION METHOD, REFERENCE, AND STATUS:
14. Mating/demating powered connectors	Meets all that apply: a) Meets the low power criteria of letter MA2-99-170 (32V or less, and less than or equal to 3A maximum available upstream current) . *AND/OR* b) Meets the paragraph 1 criteria of letter MA2-99-170 (i.e., IVA only, greater than 3A and open circuit voltage no greater than 32 volts). *AND* c) Meets bonding and grounding requirements per NSTS 37330 and/or SSP 30240 & SSP 30245.	☒ ☐ ☐	14.a.1 SVM: Review of Design 14.a.1 STATUS: Closed. ESCG-4295-10-ADV SY-MEMO-0041, "AMS-02 ISS DDRS Electrical Power Distribution and Mating/Demating of Powered Connectors," dated September 21, 2010 Note; Demating and mating operational controls for GFE T61p interface to ExPRESS Rack addressed in hazard reports (ExPRESS) EXPR-11 and (T61p) T61p-0004, Cause 4, Control 5 *Note: Include bonding and grounding diagram for mating/demating connectors as an attachment.*
15. Contingency Return and Rapid Safing	Meets all that apply: a) If payload is unstowed in Shuttle middeck: Can be stowed within 50 minutes. *Note: See paragraph 3 of letter MA2-96-190.* b) If payload is operated in the ISS: Design does not impede emergency IVA egress to the remaining adjacent pressurized volumes.	☐ ☒	15.b.1 SVM: Review of Design 15.b.1 STATUS: Closed. ISS PIRN 57206-NA-0006A, "ER-6 / MERLIN / PWD / ISSFW / CUCU / PS-28 / Condensate Transfer Pump / AMS Laptop Protrusion Exception for Stage ULF5 and Subsequent," dated 6/22/2010 approved 8/6/2010.

FLIGHT PAYLOAD STANDARDIZED HAZARD CONTROL REPORT	A. NUMBER	B. PHASE	C. DATE
	STD- ISS-DDRS-01	I/II/III	

D. PAYLOAD, DTO, DSO or RME *(Include Part Number(s), if applicable)*	HAZARD TITLE	E. VEHICLE
ISS Digital Data Recording System (DDRS)	STANDARD HAZARDS	***Shuttle Delivery to ISS ULF5***

F. DESCRIPTION OF HAZARD:	G. HAZARD CONTROLS: *(complies with)*	H. APP.	I. VERIFICATION METHOD, REFERENCE, AND STATUS:
16. Unintentional Release of Material	Hardware has been assessed for all planned transportation, stowage, and operation location(s), has a minimum of one (1) level of containment, and meets the following constraints: a) Maximum of Toxic Hazard Level 0 (THL-0) as classified by JSC 27472 *AND/OR* b) Maximum of Biological Safety Level 1 (BSL-1) as classified by JSC 63828 *AND* c) Release will have no impacts to Environmental Control and Life Support (ECLS)	☐ ☐ ☐	N/A *Note: Include Hazardous Material Summary Table (HMST) as an attachment.*

SVM 1.1.1

Engineering and Science Contract Group

2224 Bay Area Boulevard
Houston, Texas 77058

ESCG-4510-10-SES-MEMO-0026
30 September 2010

TO: Leland Hill, Chris Tutt, Phil Mott, Tim Urban

FROM: George R. Brown

SUBJECT: AMS-02 ISS DDRS Hazard Controls

AMS-02 ISS DDRS deliverable components consist of cables, connectors, removable hard drives, and small extruded aluminum boxes(adapters) enclosing printed circuit boards(PCB). The control for this hazard is review of payload design to show it complies with the requirements of NSTS-21000-IDD-MDK. Review/inspection of the design and as-built hardware confirms that the hardware meets the requirements of NSTS-21000-IDD-MDK, "Middeck Interface Definition Document".

The payload that will be stowed in STS Standard Middeck Locker is referred to as the AMS ISS Digital Data Recording System (ISS DDRS) hardware (also known as AMS Laptop hardware). It will consist of the following hardware:

Item	P/N	S/N	Provider
AMS Network Cable-10FT	SEG39138002-301	1001, 1002	Jacobs
AMS Network Cable-40FT	SEG39138002-302	1001	Jacobs
AMS Network Jack	SEG39137984-301	1001, 1002	Jacobs
AMS Xmtr Adapter	SEG39137984-301	1001, 1002	Jacobs
AMS Rcvr Adapter	SEG39137984-302	1003, 1004	Jacobs
AMS USB Cable	SEG39137981-301	1001-1004	Jacobs
AMS HRDL Cable	SEG39136091-301	1001, 1002	Jacobs
AMS Short Extension Cable	SEG39138001-301	1001,1002	Jacobs
AMS Long Extension Cable	SEG39138001-302	1003, 1004	Jacobs
AMS HD Bag	SEG39137982-301	1001	Jacobs
AMS 500GB HD AMS 750GB HD	SEG39137974-301 SEG39137974-302	1001-1007 1011-1013	Jacobs

A review of ISS DDRS components design shows that:

1) None of the ISS DDRS components exceeds the stowage volume of standard Modular Stowage Locker.

ESCG
ENGINEERING & SCIENCE CONTRACT GROUP
JACOBS
ERC | Barrios | GeoControl | Hamilton Sundstrand | MEI

Memorandum
(Continued)

For ULF5:

Item	P/N	S/N	Stowage Dimensions*	Volume (cu. Ft.)
AMS Network Cable-10FT	SEG39138002-301	1001	12x12x4	.33
AMS Network Jack	SEG39137984-301	1001	1.5x1.5x3	.004
AMS Xmtr Adapter	SEG39137984-301	1001, 1002	4x2.5x1 (2)	.01
AMS Rcvr Adapter	SEG39137984-302	1003, 1004	4x2.5x1 (2)	.01
AMS USB Cable	SEG39137984-301	1001-1002	6x6x1 (2)	.04
AMS HRDL Cable	SEG39137981-301	1001	14x14x4	.45
AMS HD Bag	SEG39137982-301	1001	10x7.5x3	.13

* inches

For ULF6:

Item	P/N	S/N	Stowage Dimensions*	Volume (cu. Ft.)
AMS Network Cable-10FT	SEG39138002-301	1002	12x12x4	.33
AMS Network Cable-40FT	SEG39138002-302	1001	14x14x4	.45
AMS Network Jack	SEG39137984-301	1002	1.5x1.5x3	.004
AMS USB Cable	SEG39137984-301	1003, 1004	6x6x1 (2)	.04
AMS HRDL Cable	SEG39137981-301	1002	14x14x4	.45
AMS Short Extension Cable	SEG39138001-301	1001,1002	12x12x2 (2)	.33
AMS Long Extension Cable	SEG39138001-302	1003, 1004	14x14x4 (2)	.9

* inches

2) Payload (excluding trays, foam, protective provisions) does not exceed the 54 pound limit referenced in IDD.

3) Payload does not require any special accommodations or power during storage.

4) Payload will utilize standard locker and attachment hardware provided by program.

5) Payload has been evaluated to meet the limit load factors encountered during lift off and landing.

This memo is submitted as formal closure of Safety Verification Method (SVM) 1.1.1 of Hazard Report (HR) Number STD-ISS-DDRS-F01. The review of the AMS ISS DDRS shows that payload is in compliance with requirements of NSTS-21000-IDD-MDK.

SVM 3.a.1:

Calculation of threshold Volume to exceed 4152 Joules of energy in a vented container used in habitable environment.

E= Threshold Energy = 3063 ft lb_f = 4152 J = 36748.3 in lb_f

P_i= Internal Pressure = atmosphere = 14.7 psia

P_e= External Pressure = Vacuum = 0 psia

V = Volume Threshold

k = ratio of specific heat (air) = 1.4

Therefore, any free volume under 999.95 cubic inches will not be a threat per JSC Form 1230, Hazard 3, Control 3a regardless of vent size, there simply cannot be sufficient energy to constitute a hazardous concern.

Outer dimensions of ISS DDRS Boxes:

Assume all interior volume is free for enclosures for first check.

Item	**D1**	**D2**	**D3**	**Volume**	(units - inches)
Hard Disk	3.96	2.76	0.374	4.09	<< 999.95 cubic inches – no potential for hazard
Transmitter Box/Receiver Box	4.85	2.13	0.906	9.34	<< 999.95 cubic inches – no potential for hazard

Dimensions shown are maximum exterior dimensions

As there is no potential for storing sufficient energy to create a hazard should any vents become blocked, no additional analysis will be performed.

SVM 6.b.1, 7.b.1:

JSC MATERIALS AND FRACTURE CONTROL CERTIFICATION

PROJECT/SUBSYSTEM MANAGER: T. Martin/EA321	REF: MATL – **10 – 065A**
HARDWARE NAME: Alpha Magnetic Spectrometer (AMS-02) ISS Digital Data Recording System (DDRS)	PART NUMBER: See Attachment 2

APPLICABLE REQUIREMENTS:

Materials Requirements:

- ☒ JSC 27301F, Materials Control Plan for JSC Flight Hardware
- ☒ NASA-STD-6016, Standard Materials and Processes Requirements for Spacecraft
- ☒ NSTS 1700.7B, Safety Policy and Requirements for Payloads Using the Space Transportation System
- ☐ Other:

Fracture Control Requirements:

- ☐ JSC 25863B, Fracture Control Plan for JSC Space-Flight Hardware
- ☐ NASA-STD-5019, Fracture Control Requirements for Spaceflight Hardware
- ☐ Other:

SPECIFIC ASSESSMENTS:

- ☒ Flammability
- ☒ Toxicity
- ☒ Stress Corrosion Cracking
- ☒ General Corrosion
- ☐ Fracture Control (☒ Not Applicable; Concurrence: **M.S.**)
- ☒ Age Life ☐ Other:
- ☐ Atomic Oxygen/Ultraviolet
- ☐ Thermal Vacuum Stability
- ☐ Fluid Compatibility:
- ☒ Microbiological Resistance

LOCATION:

- ☒ Orbiter Crew Cabin
- ☐ Orbiter Payload Bay
- ☒ Progress
- ☒ Spacehab
- ☒ MPLM
- ☒ Soyuz
- ☒ ATV
- ☒ HTV
- ☒ Space Station: ☒ Internal ☐ External
- ☐ Other:

MATERIALS USAGE AGREEMENTS (MUAs):

- ☐ No MUAs
- ☒ MUA Number(s): **ESCG/ISS 281**

Deviation: Galvanic Corrosion

LIMITATIONS: ☐ No Limitations

- ☒ Materials: The AMS Adapter Assemblies shall be packaged with MIL-D-3464, Type II desiccant for transportation and storage.
- ☐ Fracture Control:

This JSC Materials and Fracture Control Certification is consistent with existing Materials or Fracture Control Reciprocal Agreements. Materials Certification to JSC 27301 or NASA-STD-6016 and Fracture Control Certifications to JSC 25863 or NASA-STD-5019 comply with applicable materials and processes and fracture control requirements in the following program-specific documents: SE-R-0006D, Space Shuttle System Requirements for Materials and Processes; SSP 30233G, Space Station Requirements for Materials and Processes; NASA-STD-5003, Fracture Control Requirements for Payloads Using the Space Shuttle; SSP 30558C, Fracture Control Requirements for Space Station; SSP 52005B, ISS Payload Flight Equipment Requirements and Guidelines for Safety-Critical Structures.

APPROVALS

M.D. Pedley	10/15/10	M.D. Pedley	10/15/10
Fracture Control Manager, S. Forth	Date	GFE Materials Control Manager, M. Pedley	Date

MATL– 10 – 065A

ATTACHMENT 1

Hardware Acceptance Summary Report for Materials

Revision A of MATL-10-065 corrects the part number error for the hard drives and updates the toxicity assessment of the Transmitter and Receiver Adapters with the offgassing test results of the Transmitter Adapter. Except for the toxicity assessment update, there are no changes to the original materials assessment (MATL-10-065 released 9/21/10).

The Alpha Magnetic Spectrometer -02(AMS-02) ISS Digital Data Recording System (DDRS) consists of a GFE certified T61p Laptop, hard drives, Ethernet modified-Commercial Off The Shelf (COTS) cables, USB modified-COTS cables, fiber optic cables, fiber optic connectors, and adapter boxes with Printed Circuit Boards (PCBs) to convert Universal Serial Bus (USB) signals to Fiber Optic (FO) signals. The ISS DDRS will provide a means to buffer AMS-02 science data in case of a Ku-band outage and a means for the ISS crew to observe and command the AMS-02 payload.

The 36" long USB cable made of tinned copper wiring with polyolefin insulation has nickel-plated connectors and is wrapped with Teflon tape for flammability protection. The USB cables send and receive signals to/from the T61P laptop computer through the Receiver and Transmitter Adapters, which convert the USB signals to FO signals for transmission through the High Rate Data Link (HRDL) FO cables to/from the Universal Interface Panel (UIP) on the EXPRESS Rack and from there to /from the AMS-02 payload. The network (Ethernet) cables have polycarbonate plugs and flammable polyethylene jacket. Nonflammable Teflon tape is used to wrap the entire length of the network cables for flammability protection. The HRDL cable and HRDL extension cables are built from the already certified FO cable (SSQ21654E, General Specification for Space Qualify Multimode Single Fiber Cable) and connectors (CRES 303/316L or Ni-plated brass). Nonflammable Teflon tape is used to wrap the entire length of the flammable bend limiting FO tubing (polypropylene). The Network Jack consists of a 6061-T651 Al alloy shell and an electroless nickel plated plug connector (MS27467T15F35P). The hard drives (500GB and 750GB) are made of the same materials as the 160GB hard drive in the certified T61p Laptop. Seven Hitachi 500GB hard drives and three Western Digital 705GB hard drives will be stowed in a non-flammable Nomex bag (SEG39137983-701, AMS Hard Disk Drive (HDD) Bag). The AMS Hard Drive (HD) Bag (SJG39137982-301) consists of 10 hard drives stored in the AMS HDD bag, which is made of nonflammable Nomex HT90-40 fabric, Chemglass Stiffener, 10 mil Teflon film, and Nomex Velcro fasteners. The AMS Adapter Assembly (SEG39136090-301and -302) consists of an extruded 6063-T6 box enclosed on each end with 6063-T6 (or 6061-T6) end plate, and a USB/HRDL PCB coated with RTV 3140. The DDRS hardware will be soft stowed for launch and installed on-orbit in Express Rack, ISS Laboratory.

Stress Corrosion Cracking (SCC)
All metallic materials were evaluated for SCC and found acceptable.

General Corrosion:
All metallic materials have acceptable corrosion protection finishes. The gold-plated Cu/Invar/Cu gasket was attached to the 6063-T6 (or 6061-T6) end plate and the 6063-T6 adapter housing for electrical bonding and Electromagnetic Interference (EMI) shielding. This dissimilar metal coupling between the gold-plated copper and alodine 6063-T6 (or 6061-T6) is not acceptable because the electrical potential difference of this dissimilar metal coupling exceeds the 0.25 volts recommended for a permissible dissimilar metal couple. To mitigate the risk of galvanic corrosion at the gold-plated copper/alodine 6063-T6 interface, the AMS adapter assembly shall be placed in a packaging bag with MIL-D-3464, Type II desiccant for transportation and storage (Reference: MUA# ESCG\ISS-281).

Flammability:
All the flammable wiring/cable insulations are wrapped with nonflammable Teflon tapes for flammability protection. The flammable cable straps used in the HRDL and extension cables have a minimum separation distance of 2 inches. The hard drives have metallic enclosure and are not powered on by themselves. The hard drives are not flammable. The HDD bag is made of nonflammable Nomex fabrics. Other non-metallic materials are either nonflammable or used in non-flammable configurations by analysis.

Toxicity:
There will be no offgassing toxicity issue for the manifest of the seven Hitachi 500 GB and three Western Digital 750 GB hard drives on Shuttle and ISS based on the offgassing test results of a similar hard drive (Toxic Hazard Index (T-value) of 0.006/maximum allowable units of 83 hard drives for Shuttle and Toxic Hazard Index of 0.003/maximum allowable units of 166 hard drives for ISS, WSTF#95-29579). The Transmitter Adapter passed the offgassing test with the T-value of less than 0.001 for Shuttle and ISS (WSTF #10-44641). There will be no offgassing toxicity issue for the Transmitter Adapter because its T-value of <0.001 is much less than the acceptable value of 0.5. Since the Receiver Adapter and the Transmitter Adapter are identical except for a few EEE parts on the conformally coated PCB, there will also be no offgassing toxicity issue for the Receiver Adapter by analysis. Non-metallic materials of other ISS DDRS hardware are used in quantities below their maximum allowable limits for Shuttle and ISS per Materials and Processes Technical Information System (MAPTIS).

July 2009

Aging:
The ISS DDRS hardware was evaluated for aging and found acceptable. The hardware is replaceable as needed.

Microbiological Resistance:
The ISS DDRS hardware was evaluated for fungus resistance and found acceptable based on its accessibility for cleaning.

Conclusion:
The AMS Adapter Assemblies shall be packaged with MIL-D-3464, Type II desiccant for transportation and storage.

Chia Chang – MP, Mo Shoeb – FC, Certification Request Log Number 2212

ATTACHMENT 2

Attachment to MATL – **10 – 065A**

Hard Drive Assembly, AMS, 500 GB	SEG39137974-301
Hard Drive Assembly, AMS, 750 GB	SEG39137974-302
Hard Drive Assembly, AMS, 640 GB	SEG39137974-303
Cable Assembly, USB	SEG39137981-301
Cable Assembly, Network	SEG39138002-301 and -302
AMS Adapter Assembly	SEG39136090-301 and -302
Cable Assembly, AMS HRDL	SEG39136091-301
Network Jack Assembly	SEG39137984-301
Cable Assembly, Extension	SEG39138001-301 and -302
AMS HD Bag	SJG39137982-301

ISS MATERIALS USAGE AGREEMENT	USAGE AGREEMENT NO.	REV.	PAGE 1 OF 2
	ESCG/ISS-281		

TITLE:	CATEGORY:	EFFECTIVITY:
AMS Transmitter Adapter and Receiver Adapter, Alpha Magnetic Spectrometer 02 (AMS-02)	2	STS-133/ULF5

TYPE OF DEVIATION:	REQUIREMENT DEVIATED:
☐ MATERIAL ☒ EQUIPMENT (NO. PER VEHICLE: 4)	☐ FLAMMABILITY ☐ TVS ☐ SCC ☐ OFFGASSING ☐ O_2 COMPATIBILITY ☒ OTHER Galvanic Corrosion

EQUIPMENT	PART NUMBER	MANUFACTURER
AMS Transmitter Adapter, and Receiver Adapter	SEG39136090-301, and -302	NASA/JSC

MATERIAL	TRADE NAME	SPECIFICATION	MANUFACTURER
6063 Al alloy box and end plate, Gold-plated Cu/Invar/Cu			

THICK (in.)	WEIGHT (lbs.)	AREA (in^2)	LOCATION	ENVIRONMENT		
				TEMPERATURE (°F)	PRESS (PSIA)	MEDIA
			☒ HABITABLE ☐ NONHABITABLE	65 F to 95 F	Ambient to 10.2 psia	30% oxygen worst case

APPLICATION (use second sheet if required)

The AMS Transmitter and Receiver Adapters convert High Rate Data Link (HRDL) signals from fiber optics to Universal Serial Bus (USB), to be processed by a T61p laptop computer for storage and later transmission to ground facilities. The initial construction of the housing for the adapters did not produce sufficient grounding to eliminate unwanted radiated emissions at the USB connector end of the Adapters. A fix was identified, adding a conductive 'gasket' that would ground the end plate to the USB connector and by extension then to the entire housing. Testing conducted at the developer's facility in CERN, Switzerland showed that this effectively eliminated the radiated emissions. The gaskets are being implemented in the Class 1 units to mitigate the EMI issue for the Adapters. In order to mitigate possible corrosion of the copper material in the gasket, the gaskets will be gold-plated. A concern was raised by ESCG Materials about dissimilar metal coupling (galvanic corrosion) between the gold-plating of the gaskets and the end plate and the adapter housing (6063-T6 Al alloy). The dissimilar metal coupling configuration is shown in Figure 1, Attachment 1.

RATIONALE (use second sheet if required)

1) The AMS HRDL/USB Adapters are not safety critical hardware.
2)The adapter assembly will be bagged and stored with MIL-D-3464E, Type II desiccant during transportation and stowage.
3) The galvanic corrosion between alodine 6063-T6 Al alloy and gold-plated gasket is not likely to occur in the non-condensable ISS pressurized environment.
4) Spare adapters are manifested and will replace the adapters that fail.
5) Failure of electrical grounding of the adapters due to galvanic corrosion does not affect any ISS system or equipment in any way.

APPROVALS

ORIGINATOR/ORGANIZATION	DATE	JSC MATERIALS AND PROCESSES TECHNOLOGY BRANCH	DATE
ESCG Chris Chang 8/10/10	8/10/10	M. D. Pelley	8/10/10
PROJECT MANAGER	**DATE**	**PROGRAM MANAGER**	**DATE**
Michael F. Fohey 8/17/10			

JSC Form 1466 (Rev June 93) Michael F. Fohey NASA-JSC

ISS MATERIALS USAGE AGREEMENT	USAGE AGREEMENT NO. ESCG/ISS-281	REV.	PAGE 2 OF 2
TITLE: AMS Transmitter Adapter and Receiver Adapter, Alpha Magnetic Spectrometer 02 (AMS-02)	CATEGORY: 2	EFFECTIVITY: STS-134	

APPLICATION (Cont.):
This MUA provides rationale for accepting this dissimilar metal coupling configuration. AMS Project will provide appropriate controls to insure hardware is protected from exposure to excessive humidity.

JSC Form 1466 (Rev June 93) NASA-JSC

ATTACHMENT 1

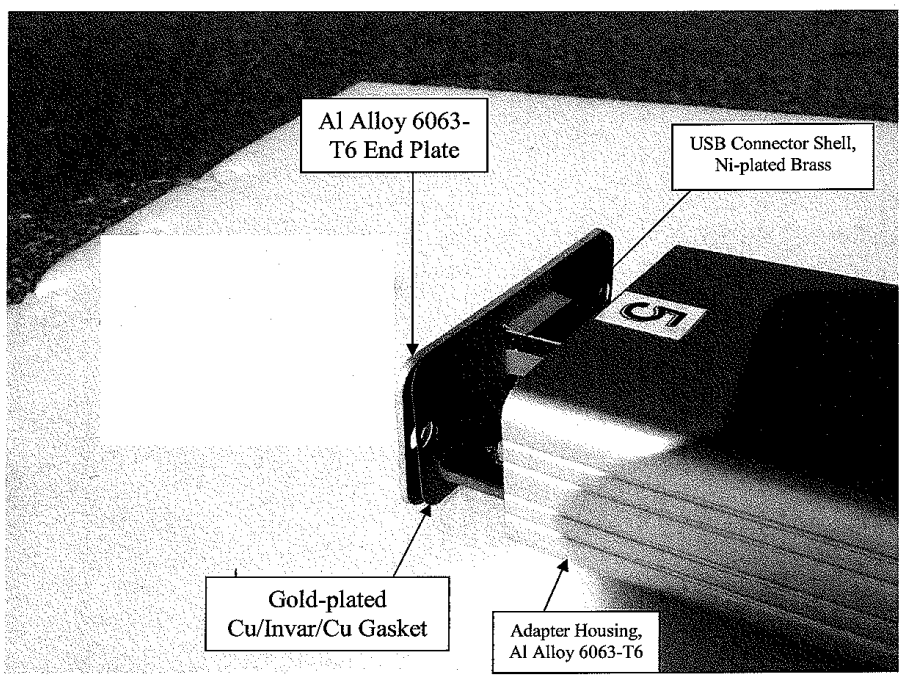

Figure 1: Photo of Unassembled Transmitter or Receiver Adapter Showing Dissimilar Metal Coupling Configuration

SVM 8.1.b.1:

National Aeronautics and
Space Administration

EV5-10-EMC-019R
August 31, 2010

Lyndon B. Johnson Space Center
2101 NASA Parkway
Houston, TX 77058

EMI/EMC TEST REPORT
Certification of the
Alpha Magnetic Spectrometer (AMS)
Transmitter and Receiver Adapters

	NAME	PHONE	SIGNATURE/DATE
DISTRIBUTION	EA3/Trenton Martin	281-483-3296	9/8/10
WRITTEN BY	ESCG/ Charles Bautsch	281-483-0222	9/8/10
APPROVED BY	EV5/ Robert C. Scully	281-483-1499	for R. Scully 9/8/10

Table of Contents

Summary Information Sheet 3
Test Report Summary 4
1.0 INTRODUCTION 5
2.0 APPLICABLE DOCUMENTS 5
3.0 CONFIGURATION OF THE EQUIPMENT UNDER TEST 5
4.0 TEST RESULTS 8
4.1 RE02, Radiated Emissions, 14 kHz – 10 GHz; 13.5 – 15.5 GHz 13
4.2 RS03, Radiated Susceptibility, Discrete Frequencies 20
5.0 CONCLUSIONS 29
6.0 APPENDIX 30

List of Figures
Fig. 3.1. General Test Configuration for AMS02 Tx and Rx Adapters 5
Fig. 3.2. AMS02 Tx and Rx Adapter Assemblies 6
Fig. 3.3. Test Support Equipment for the AMS02 Tx and Rx Adapters 6
Fig. 3.4. Test Setup for the AMS02 Tx and Rx Adapters 7
Fig. 4.1.1. RE02 Test Data 13
Fig. 4.1.2. RE02 Test Data, Rod Antenna, 14 kHz – 30 MHz 14
Fig. 4.1.3. RE02 Test Setup, Rod Antenna, 14 kHz – 30 MHz 14
Fig. 4.1.4. RE02 Test Data, Biconical Antenna, 30 MHz – 200 MHz, Horizontal Polarization 15
Fig. 4.1.5. RE02 Test Setup, Biconical Antenna, 30 MHz – 200 MHz, Horizontal Polarization 15
Fig. 4.1.6. RE02 Test Data, Biconical Antenna, 30 MHz – 200 MHz, Vertical Polarization 16
Fig. 4.1.7. RE02 Test Setup, Biconical Antenna, 30 MHz – 200 MHz, Vertical Polarization 16
Fig. 4.1.8. RE02 Test Data, Spiral Cone Antenna, 200 MHz – 1000 MHz 17
Fig. 4.1.9. RE02 Test Setup, Spiral Cone Antenna, 200 MHz – 1000 MHz 17
Fig. 4.1.10. RE02 Test Data, Horn Antenna, 1 GHz – 15.5 GHz, Horizontal Polarization 18
Fig. 4.1.11. RE02 Test Setup, Horn Antenna, 1 GHz – 15.5 GHz, Horizontal Polarization 18
Fig. 4.1.12. RE02 Test Data, Horn Antenna, 1 GHz – 15.5 GHz, Vertical Polarization 19
Fig. 4.1.13. RE02 Test Setup, Horn Antenna, 1 GHz – 15.5 GHz, Vertical Polarization 19
Fig. 4.2.1. RS03 Test Setup, Biconical Antenna, Horizontal Polarization, 30 MHz – 200 MHz 26
Fig. 4.2.2. RS03 Test Setup, Biconical Antenna, Vertical Polarization, 30 MHz – 200 MHz 26
Fig. 4.2.3. RS03 Test Setup, Double Ridge Horn Antenna, Horizontal Polarization, 200 MHz – 1000 MHz 27
Fig. 4.2.4. RS03 Test Set up, Double Ridge Horn Antenna, Vertical Polarization, 200 MHz – 1000 MHz 27
Fig. 4.2.5. RS03 Test Setup, Small Double Ridge Horn Antenna, Horizontal Polarization, 1 GHz – 15.5 GHz 28
Fig. 4.2.6. RS03 Test Setup, Small Double Ridge Horn Antenna, Vertical Polarization, 1 GHz – 15.5 GHz 28

List of Tables
TABLE 4-1 Test Results (SSP 30237) 8
TABLE 4-2 RS03 Discrete Frequencies & Test Levels 8
TABLE 4.2-1 RS03 Test Data, Discrete Frequencies, Horizontal Polarization 20
TABLE 4.2-2 RS03 Test Data, Discrete Frequencies, Vertical Polarization 23
TABLE 5-1 Test Summary: AMS Tx and Tx Adapters 29

Summary Information Sheet

TASK PERFORMANCE SHEET (TPS):	2A1020166
EQUIPMENT UNDER TEST:	AMS Transmitter Adapter : P/N SEG39136090-301, S/N 1001 AMS Receiver Adapter : P/N SEG39136090-302, S/N 1003
PROJECT MANAGER:	Wesley Gordon, 281-244-3688
TEST DATE:	August 19 – August 20, 2010
TEST LOCATION:	NASA, Johnson Space Center, Houston, TX Primary EMI Laboratory
EMC PROJECT ENGINEER:	Charlie Bautsch, 281-483-0222
NASA JSC EMC LEAD:	Robert C. Scully, 281-483-1499
TEST MANAGER:	Xiang Ni. 281-483-0186
TEST OPERATOR(S):	Cynthia Hightower, 281-483-4476 Charles Brooks, 281-483-8402

Test Report Summary

The Transceiver and Transmitter Adapters are part of the AMS02 ISS Digital Data Recorder System (DDRS). They convert between USB and HRDL fiber optic signals. There is one module for transmit (Tx) and one for receive (Rx). The DDRS ensures data integrity in the event of ISS data systems and/or payload outages. The following tests (RE02 and RS03) were performed for EMI/EMC certification of the Tx and Rx adapters per SSP 30237.

August 19, 2010

- RE02, Radiated Emissions, Electric Field (14 kHz–10 GHz, 13.5 GHz–15.5 GHZ)
  - The AMS02 Tx and Rx Adapters meet the specified requirements for RE02.

August 20, 2010

- RS03, Radiated Susceptibility, Electric Field (discrete frequencies)
  - The AMS02 Tx and Rx Adapters meet the specified requirements for RS03.

The AMS02 Tx and Rx Adapters are in full compliance with SSP 30237 test requirements.

1.0 INTRODUCTION

This test report details the preparations for, and results of, the Electromagnetic Interference/Compatibility (EMI/EMC) testing accomplished for ISS certification of the Alpha Magnetic Spectrometer (AMS02) Transmitter and Receiver Adapters.

2.0 APPLICABLE DOCUMENTS

The following documents of the exact issue shown form a part of this Test Report to the extent specified herein. In the event of conflict between the documents referenced herein and the contents of this report, this document shall have precedence.

SSP 30237, Rev. R Dated: January 31, 2007	Space Station Electromagnetic Interference Emission and Susceptibility Requirements
ESCO-5132-06-BDL-DOC-0056 Dated August 2006	Electromagnetic Interference/Compatibility Laboratory Test Methods
JSC 27933, Rev B Dated March 05, 2004	EMI/EMC Laboratory Configuration Document

3.0 CONFIGURATION OF THE EQUIPMENT UNDER TEST

The AMS02 Tx and Rx Adapters are configured for testing as shown below. The adapter modules are powered by the T61 laptop computer's USB power source of 5 Vdc through the USB cables. A fiber optic cable is used to a provide loop-back for the HRDL signals at 6 Mbps.

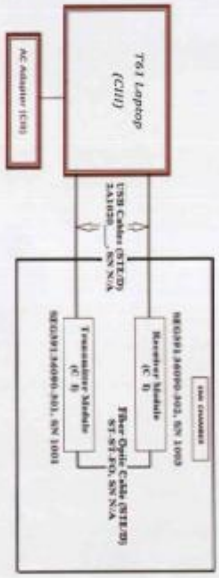

Fig. 3.1. General Test Configuration for the AMS02 Tx & Rx Adapters

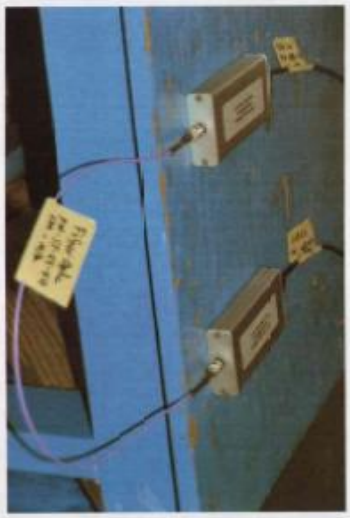

Fig. 3.2. AMS02 Tx and Rx Adapter Assemblies

Fig. 3.3. Test Support Equipment for the AMS02 Tx and Rx Adapters

Fig. 3.4. Test Setup for the AMS02 Tx and Rx Adapters

4.0 TEST RESULTS

This section provides details of the tests performed per Space Station requirements. Test results indicate that the AMS02 Tx and Rx Adapters are in compliance with the requirements of SSP 30237, as shown in TABLE 4-1. The radiated susceptibility test, RS03, is evaluated at the discrete frequencies listed in TABLE 4-2. These frequencies and test levels are based on RF emitter sources located on the ISS.

TABLE 4-1
Test Results (SSP 30237)

EMI TEST	DESCRIPTION	COMPLY? Y/N
RE02	Radiated Emissions Electric Field 14 kHz-10 GHz, 13.5-15.5 GHz	Y
RS03	Radiated Susceptibility Electric Field Refer to TABLE 4-2	Y

TABLE 4-2
RS03 Discrete Frequencies and Test Levels

System Name	Frequency (MHz)	Required Levels V/m
ORLAN Korona VHF2 (EVA Voice)	121.125	5
ORLAN Korona VHF2 (EVA Voice)	121.75	5
FGB TORU (TOPY) - Dipole		
Progress TORU (A9)		
Soyuz VHF2 (A1)		
SM Voice (VHF-2) (EVA mode)	130.167	5
SM Voice (VHF-2) (Space to Ground)		
SM Voice (VHF-1)	143.625	5
FGB Sirius (ARISS) - VHF	145 - 148	5
SM ARISS - VHF		

TABLE 4-2 (continued)
RS03 Discrete Frequencies and Test Levels

System Name	Frequency (MHz)	Required Levels V/m
Progress Telemetry (A1)	166.15	5
Soyuz Telemetry (A2)		
UHF-ATC Antenna	243	5
ORLAN Tranzit Telemetry	247	5
UHF-ATC Antenna	259.7	5
UHF-ATC Antenna	296.8	5
SM GTS 1 (UHF)	400.1	30
WVS UHF Antenna (Spread Spectrum)	400.175 - 400.975	30
WVS (Command) Payload Bay		
SSCS Airlock Antenna	414.2	30
UHF SSCS External Antenna (Lab Module) High Power		
UHF SSCS External Antenna (Lab Module) Low Power		
UHF SSCS External Antenna (Port P1 Truss) High Power		
UHF SSCS External Antenna (Port P1 Truss) Low Power		
SSCS SSER		
SSO Airlock		
SSO UHF SSCS Payload Bay Antenna (High Power)		
SSO UHF SSCS Payload Bay Antenna (Low Power)		
SSCS Airlock Antenna	417.1	30
UHF SSCS External Antenna (Lab Module) High Power		
UHF SSCS External Antenna (Lab Module) Low Power		
UHF SSCS External Antenna (Port P1 Truss) High Power		
UHF SSCS External Antenna (Port P1 Truss) Low Power		
SSCS SSER		
SSO UHF SSCS Payload Bay Antenna (High Power)		
SSO UHF SSCS Payload Bay Antenna (Low Power)		
SM ARISS UHF	435 - 438	30
FGB Television (KL-108A)	463	5
FGB TORU (TOPY) - Slot		
DC1 A52 Television		
SM Television		
Progress Television (A2, A10)		
Soyuz Television (A13, A14)		
SM Telemetry	628	5
SM Telemetry	630	5
FGB Telemetry (BP-9TY)(БР-9ЦУ)	632	5

TABLE 4-2 (continued)
RS03 Discrete Frequencies and Test Levels

System Name	Frequency (MHz)	Required Levels V/m
FGB Telemetry (BP-9TY)(БР-9ЦУ)	634	5
TVIS (Heart Monitor)	868.35	5
Instrumented EVA Worksite Interface (I-WIF)	902	5
External Wireless Instrumentation System (EWIS) Antenna	915	5
Wireless Instrumentation System (WIS) Antenna		
Wireless Instrumentation System (WIS) Antenna		
Aft Thrust Structure Micro-SGU	916.5	5
Micro TAU		
OMS Pod Micro-SGU		
SRMS Wireless Strain Gauge Instrumentation System (WSGIS)	916.7	5
SSO Wing Leading Edge		
Wide Band Micro TAU (WBMTAU)		
Progress Command(A3, A4, A7, A8)	922.76	5
Soyuz Command (A11, A12)		
Soyuz Command (A3, A4, A5, A6, A7, A8)		
SM Command (Regul) HGA	924.6	5
SM Command (Regul) LGA		
SSO TACAN	962 - 1213	25
SM GTS 2 (X-Dipole)	1428 - 1430	25
S-Band Payload Interrogator Antenna	2025 - 2120	25
JEM Prox (Aft Antenna) - High Power	2030.4	25
JEM Prox (Upper Antenna) - High Power		
JEM Prox (Forward Antenna) - High Power		
JEM Prox (Aft Antenna) - Low Power		
JEM Prox (Upper Antenna) - Low Power		
JEM Prox (Forward Antenna) - Low Power		
WAS SM --> ATV (WAS Ant) Forward SM to ATV	2030.43	25
WAL SM --> ATV (WAL Ant) Forward SM to ATV		
ATV Prox Ant (Return ATV to ISS)	2205	25
HTV PLS Zenith (High Power)		
HTV PLS Zenith (Low Power)		
HTV PLS Nadir (High Power)		
HTV PLS Nadir (Low Power)		

TABLE 4-2 (continued)
RS03 Discrete Frequencies and Test Levels

System Name	Frequency (MHz)	Required Levels V/m
S-Band Quad Antennas	2217.5	25
RokvISS (Robotic Komponent Verification on ISS)	2239.4	25
ACES - S-Band Downlink (ISS)	2248	25
S-Band Hemi Antenna	2250	25
S BD ACS High Gain Antenna	2265	25
S BD ACS Low Gain Antenna		
ATV TDRS Ant (Return ATV to TDRSS)	2287.5	25
HTV IOS Zenith (Nominal Operations)		
HTV IOS (Loss of Attitude-Zenith Antenna)		
HTV IOS (Loss of Attitude-Nadir Antenna)		
S-Band Quad Antennas		
FGB Komparus	2366.75	25
FGB Komparus	2367.063	25
802.11 Pre-N Access Point	2400 - 2482	25
802.11 Pre-N Laptop		
RFID		
802.11B Laptop		
Bluetooth Laptop		
Wireless LAN		
Wireless LAN		
WVS S-Band Antenna on EMU		
WVS S-Band Antenna on EMU		
WVS S-Band Antenna on EMU		
WVS S-Band Antenna on EMU		
3M Orbit Radio Tracking	2005	25
Progress Tracking (A5,A6)	2860	25
Soyuz Tracking (A9, A10)		
FGB Tracking (38G6)	2890	25
SM Kurs-P (2AP-BKA)	3230	25
SM Kurs-P (4AO-BKA)	3234	25
SM Kurs-P (AKP-BKA N3 & N4)	3240	25
SM Kurs-P (AP-BKA)		

TABLE 4-2 (continued)
RS03 Discrete Frequencies and Test Levels

System Name	Frequency (MHz)	Required Levels V/m
FGB Kurs-P Dish (4A0-BKA)	3245	25
FGB Kurs-P Dish (AP-BKA)		
FGB Kurs-P Dish (2AP-BKA)		
FGB Kurs-P (AKP-BKA N3, N4)		
SM Kurs-P (AP-BKA)		
SM Kurs-P (AKP-BKA N3, N4)		
Progress KURS-A (2ASF1-N1, N2)	3294	25
Progress KURS-A (2AO-BKA)		
Soyuz KURS-A (2ASF-N1, N2)		
Soyuz KURS-A		
FGB Kurs-A (AC-BKA)	3294.2 - 3298.9	25
FGB Kurs-A (AKP-BKA N1, N2)		
DC1 KURS-A (AKP-BKA)		
Progress KURS-A (AKR-BKA & AKR-BKA(r))		
Soyuz KURS-A (AKR-BKA & AKR-BKA (z,r))		
Soyuz KURS-A (2AO)	3299	25
ATV KURS-KMTA 1		
ATV KURS-KMTA 2		
SSP 30237 specific callout	8500	20
ACES - Ku-Band Uplink (Ground)	13475	25
SSO Ku-Band Radar Antenna (High Power Mode)	13883	25
SSO Ku-Band Radar Antenna (Low Power Mode)		
SSO Ku-Band Radar Antenna (Medium Power Mode)		
ACES - Ku-Band Downlink (ISS)	14703.4	25
KU BD SGS (Failure mode)	15003.4	25
KU BD SGS (normal mode)		
SSO Ku-Band Antenna		
SM Ku-Band (Lira)	15155	25
SSO MSBLS	15460	25

4.1 RE02, Radiated Emissions, 14 kHz – 10 GHz; 13.5 – 15.5 GHz

The test data show in Fig. 4.1.1. indicates compliance of the AM302 Tx and Rx Antennas with RE02 test requirements. Fig. 4.1.2. through Fig. 4.1.13. show the test data and test setups for the applicable antenna frequency ranges, including horizontal and vertical polarizations as required in SSP 30237.

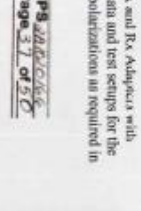

ORIGINAL

Fig. 4.1.1. RE02 Test Data

ORIGINAL

Fig. 4.1.2. RE02 Test Data, Rod Antenna, 14 kHz -30 MHz

Fig. 4.1.3. RE02 Test Setup, Rod Antenna, 14 kHz -30 MHz

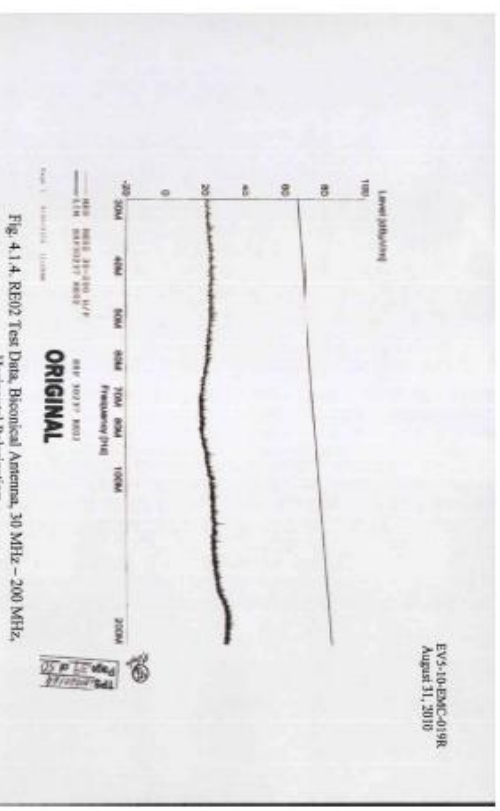

Fig. 4.1.4. RE02 Test Data, Biconical Antenna, 30 MHz – 200 MHz, Horizontal Polarization

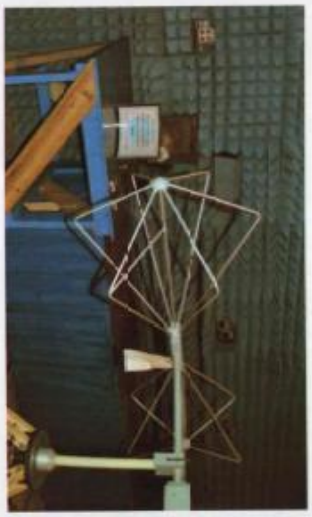

Fig. 4.1.5. RE02 Test Setup, Biconical Antenna, 30 MHz – 200 MHz, Horizontal Polarization

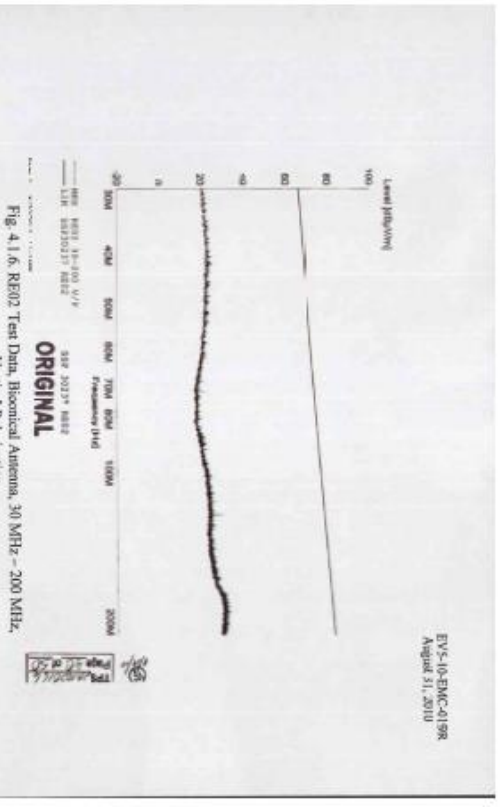

Fig. 4.1.6. RE02 Test Data, Biconical Antenna, 30 MHz – 200 MHz, Vertical Polarization

Fig. 4.1.7. RE02 Test Setup, Biconical Antenna, 30 MHz – 200 MHz, Vertical Polarization

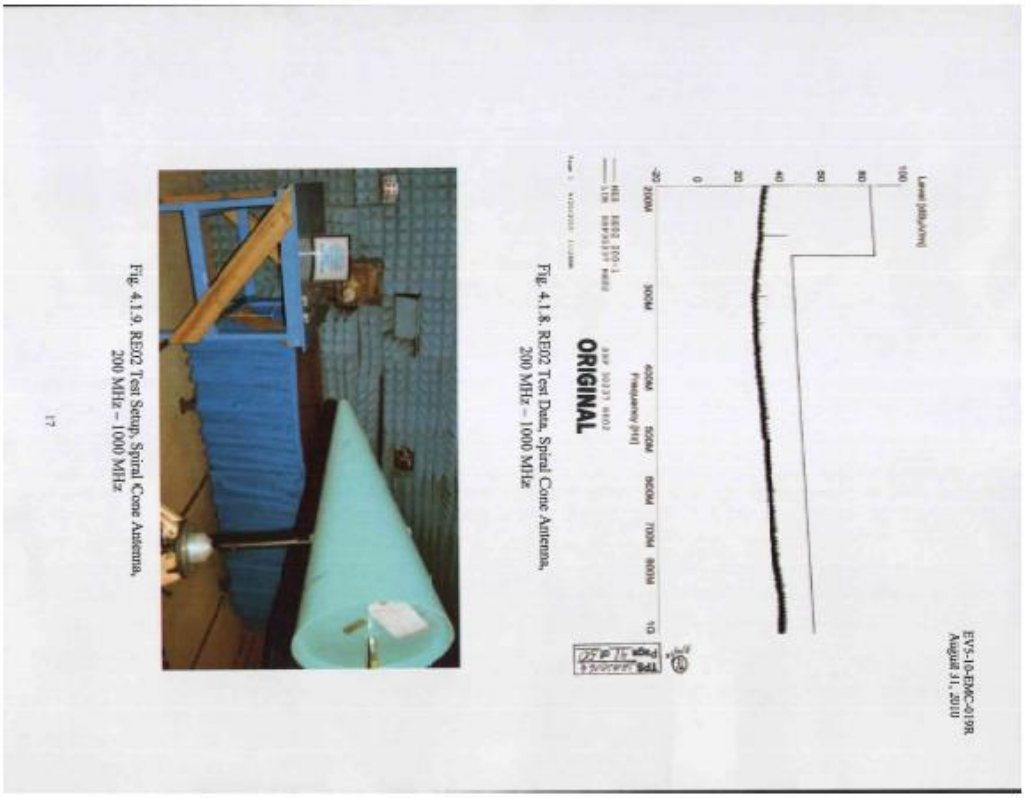

Fig. 4.1.8. RE02 Test Data, Spiral Cone Antenna, 200 MHz – 1000 MHz

Fig. 4.1.9. RE02 Test Setup, Spiral Cone Antenna, 200 MHz – 1000 MHz

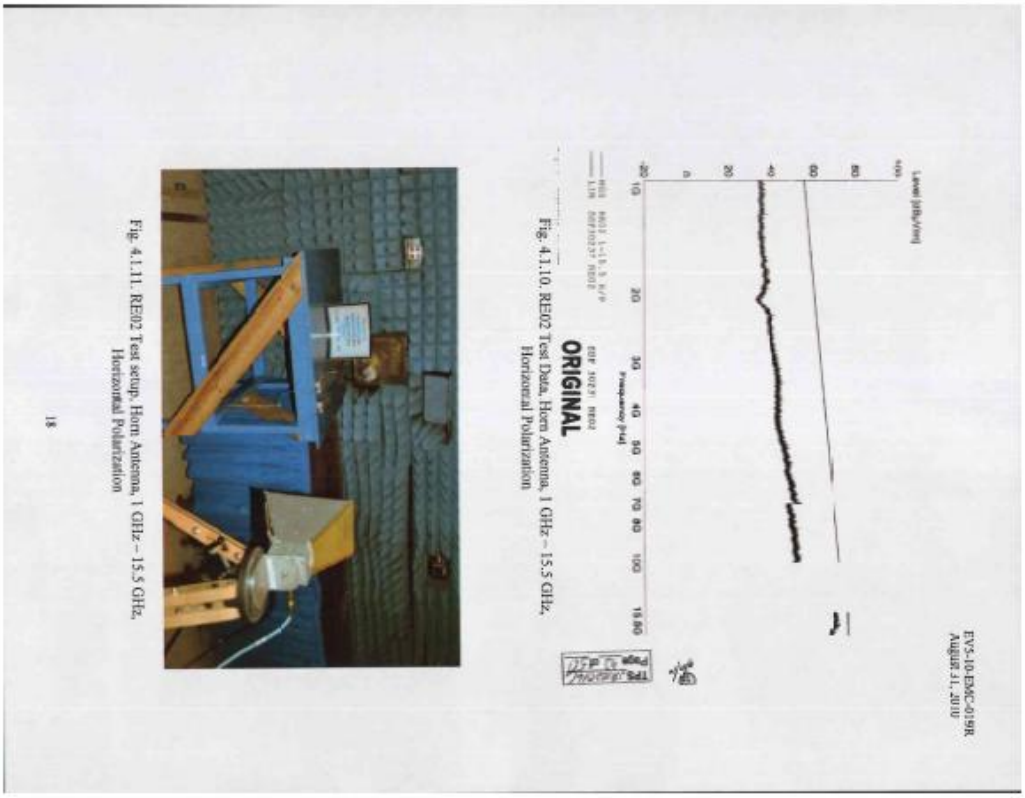

Fig. 4.1.10. RE02 Test Data, Horn Antenna, 1 GHz – 15.5 GHz, Horizontal Polarization

Fig. 4.1.11. RE02 Test setup, Horn Antenna, 1 GHz – 15.5 GHz, Horizontal Polarization

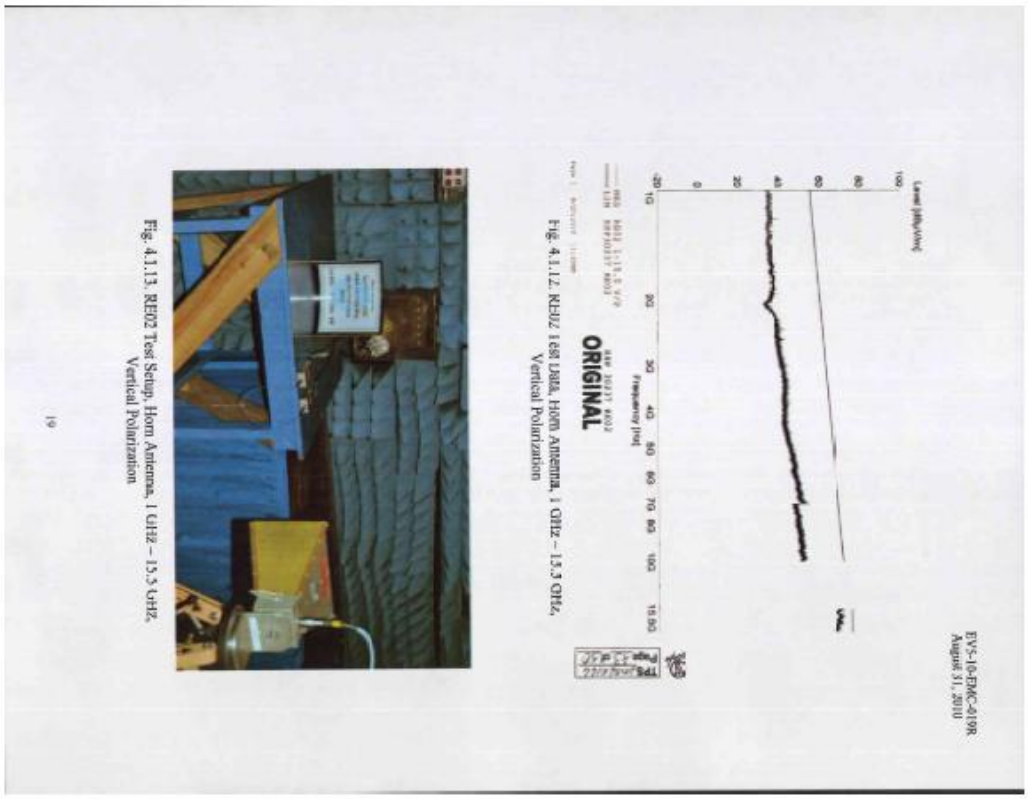

Fig. 4.1.12. RE02 168 UBTA, Horn Antenna, 1 GHz – 15.5 GHz, Vertical Polarization

Fig. 4.1.13. RE02 Test Setup, Horn Antenna, 1 GHz – 15.5 GHz, Vertical Polarization

4.2 RS03, Radiated Susceptibility, Discrete Frequencies

The following test data shown for RS03 is based on the discrete ISS Emitter Frequencies listed in TABLE 4.2. The measured data shown in TABLE 4.2-1 is for horizontal antenna polarization. The measured data shown in TABLE 4.2-2 is for vertical antenna polarization. The test data demonstrates compliance of the AMS Tx and Rx Adapters with the RS03 test requirements. Fig. 4.2.1. through Fig. 4.2.6. show test setups for the applicable frequency ranges and antenna polarizations.

TABLE 4.2-1
RS03 Test Data, Discrete Frequencies, Horizontal Polarization

Horizontal Polarization (Discrete Frequencies)					
FREQUENCY (MHz)	SSP30237 Limit (V/m)	Injected Test Signal Probe #1 Level (V/m)	Injected Test Signal Probe #2 Level (V/m)	Remarks	Test Sample Response
178.125	5.00	4.90	5.25	AMS Pass Margin 0.7, 4V/m Level @ 5.0V	Not Susceptible
221.750	5.00	4.90	5.15	AMS Pass Margin 0.7, 4V/m Level @ 5.0V	Not Susceptible
139.187	5.00	5.05	5.45	AMS Pass Margin 0.7, 4V/m Level @ 5.0V	Not Susceptible
143.655	5.00	5.14	5.00	AMS Pass Margin 0.7, 4V/m Level @ 5.0V	Not Susceptible
148.500	5.00	5.28	5.35	AMS Pass Margin 0.7, 4V/m Level @ 5.0V	Not Susceptible
148.500	5.00	5.24	5.45	AMS Pass Margin 0.7, 4V/m Level @ 5.0V	

TABLE 4.2-1 (continued)
RS03 Test Data, Discrete Frequencies, Horizontal Polarization

Horizontal Polarization (Discrete Frequencies)

FREQUENCY (MHz)	SSP30237 Limit (V/m)	Injected Test Signal Probe #1 Level (V/m)	Injected Test Signal Probe #2 Level (V/m)	Remarks	Test Sample Response
198.150	5.00	5.83	3.19	AMS Pass Maintain R.F. Vm Level @ Limit	Not Susceptible
243.000	5.00	4.23	3.19	AMS Pass Maintain R.F. Vm Level @ Limit	Not Susceptible
247.000	5.00	4.23	3.19	AMS Pass Maintain R.F. Vm Level @ Limit	Not Susceptible
258.750	5.00	4.36	3.43	AMS Pass Maintain R.F. Vm Level @ Limit	Not Susceptible
298.600	5.00	6.81	3.28	AMS Pass Maintain R.F. Vm Level @ Limit	Not Susceptible
308.100	30.00	38.91	30.84	AMS Pass Maintain R.F. Vm Level @ Limit	Not Susceptible
409.175	30.00	27.98	30.40	AMS Pass Maintain R.F. Vm Level @ Limit	Not Susceptible
412.975	30.00	28.10	30.40	AMS Pass Maintain R.F. Vm Level @ Limit	↓
414.000	30.00	24.00	30.00	AMS Pass Maintain R.F. Vm Level @ Limit	Not Susceptible
417.100	30.00	18.78	30.10	AMS Pass Maintain R.F. Vm Level @ Limit	Not Susceptible
425.000	30.00	23.17	30.00	AMS Pass Maintain R.F. Vm Level @ Limit	Not Susceptible
436.000	30.00	24.71	30.10	AMS Pass Maintain R.F. Vm Level @ Limit	↓
480.000	5.00	4.01	5.00	AMS Pass Maintain R.F. Vm Level @ Limit	Not Susceptible
528.000	5.00	4.00	5.05	AMS Pass Maintain R.F. Vm Level @ Limit	Not Susceptible
530.000	5.00	4.18	5.09	AMS Pass Maintain R.F. Vm Level @ Limit	Not Susceptible
532.000	5.00	4.07	5.07	AMS Pass Maintain R.F. Vm Level @ Limit	Not Susceptible
634.000	5.00	4.60	5.13	AMS Pass Maintain R.F. Vm Level @ Limit	Not Susceptible
888.000	5.00	5.63	4.49	AMS Pass Maintain R.F. Vm Level @ Limit	Not Susceptible
902.000	5.00	4.46	5.09	AMS Pass Maintain R.F. Vm Level @ Limit	Not Susceptible
915.000	5.00	4.31	5.51	AMS Pass Maintain R.F. Vm Level @ Limit	Not Susceptible
918.000	5.00	4.27	5.45	AMS Pass Maintain R.F. Vm Level @ Limit	Not Susceptible
918.750	5.00	4.33	5.61	AMS Pass Maintain R.F. Vm Level @ Limit	Not Susceptible
922.750	5.00	4.02	5.50	AMS Pass Maintain R.F. Vm Level @ Limit	Not Susceptible
924.000	5.00	4.48	5.17	AMS Pass Maintain R.F. Vm Level @ Limit	Not Susceptible
960.000	25.00	30.49	24.85	AMS Pass Maintain R.F. Vm Level @ Limit	Not Susceptible
1311.000	30.00	31.08	30.84	AMS Pass Maintain R.F. Vm Level @ Limit	↓
1428.000	30.00	24.47	30.98	AMS Pass Maintain R.F. Vm Level @ Limit	Not Susceptible
1430.000	30.00	25.07	30.11	AMS Pass Maintain R.F. Vm Level @ Limit	↓
2000.000	30.00	30.30	29.21	AMS Pass Maintain R.F. Vm Level @ Limit	Not Susceptible
2120.000	30.00	19.79	29.70	AMS Pass Maintain R.F. Vm Level @ Limit	↓
2200.400	30.00	30.77	30.08	AMS Pass Maintain R.F. Vm Level @ Limit	Not Susceptible
2200.400	30.00	30.77	30.04	AMS Pass Maintain R.F. Vm Level @ Limit	Not Susceptible
2207.000	30.00	24.61	29.63	AMS Pass Maintain R.F. Vm Level @ Limit	Not Susceptible
2217.800	30.00	24.00	29.23	AMS Pass Maintain R.F. Vm Level @ Limit	Not Susceptible
2230.400	30.00	22.09	30.57	AMS Pass Maintain R.F. Vm Level @ Limit	Not Susceptible
2240.000	30.00	20.84	30.37	AMS Pass Maintain R.F. Vm Level @ Limit	Not Susceptible
2250.000	30.00	20.80	25.71	AMS Pass Maintain R.F. Vm Level @ Limit	Not Susceptible

TABLE 4.2-1 (continued)
RS03 Test Data, Discrete Frequencies, Horizontal Polarization

Horizontal Polarization (Discrete Frequencies)

FREQUENCY (MHz)	SSP30237 Limit (V/m)	Injected Test Signal Probe #1 Level (V/m)	Injected Test Signal Probe #2 Level (V/m)	Remarks	Test Sample Response
2260.000	30.00	19.80	25.36	AMS Pass Maintain R.F. Vm Level @ Limit	Not Susceptible
2287.500	30.00	20.40	26.00	AMS Pass Maintain R.F. Vm Level @ Limit	Not Susceptible
2299.750	30.00	20.20	25.18	AMS Pass Maintain R.F. Vm Level @ Limit	Not Susceptible
2367.000	30.00	25.27	25.16	AMS Pass Maintain R.F. Vm Level @ Limit	Not Susceptible
2400.000	30.00	20.62	24.36	AMS Pass Maintain R.F. Vm Level @ Limit	Not Susceptible
2402.000	30.00	22.23	23.89	AMS Pass Maintain R.F. Vm Level @ Limit	↓
2408.000	30.00	21.73	24.43	AMS Pass Maintain R.F. Vm Level @ Limit	Not Susceptible
2480.000	30.00	20.48	23.43	AMS Pass Maintain R.F. Vm Level @ Limit	Not Susceptible
2890.000	25.00	20.54	23.28	AMS Pass Maintain R.F. Vm Level @ Limit	Not Susceptible
3130.000	25.00	23.02	23.28	AMS Pass Maintain R.F. Vm Level @ Limit	Not Susceptible
3234.000	25.00	23.02	23.08	AMS Pass Maintain R.F. Vm Level @ Limit	Not Susceptible
3240.000	25.00	23.87	23.88	AMS Pass Maintain R.F. Vm Level @ Limit	Not Susceptible
3245.000	25.00	24.14	23.80	AMS Pass Maintain R.F. Vm Level @ Limit	Not Susceptible
3294.000	25.00	20.47	23.80	AMS Pass Maintain R.F. Vm Level @ Limit	Not Susceptible
3294.500	25.00	20.45	23.41	AMS Pass Maintain R.F. Vm Level @ Limit	Not Susceptible
3298.800	25.00	20.47	23.87	AMS Pass Maintain R.F. Vm Level @ Limit	↓
3299.000	25.00	20.24	23.17	AMS Pass Maintain R.F. Vm Level @ Limit	Not Susceptible
3960.000	20.00	20.73	19.29	AMS Pass Maintain R.F. Vm Level @ Limit	Not Susceptible
10475.000	20.00	20.61	18.13	AMS Pass Maintain R.F. Vm Level @ Limit	Not Susceptible
13860.000	25.00	25.23	19.42	AMS Pass Maintain R.F. Vm Level @ Limit	Not Susceptible
14703.400	25.00	25.62	21.43	AMS Pass Maintain R.F. Vm Level @ Limit	Not Susceptible
15337.500	25.00	25.95	21.57	AMS Pass Maintain R.F. Vm Level @ Limit	Not Susceptible
15155.000	25.00	25.67	19.29	AMS Pass Maintain R.F. Vm Level @ Limit	Not Susceptible
15490.000	25.00	22.06	25.13	AMS Pass Maintain R.F. Vm Level @ Limit	Not Susceptible

TABLE 4.2-2
RS03 Test Data, Discrete Frequencies, Vertical Polarization

Vertical Polarization (Discrete Frequencies)					
FREQUENCY (MHz)	SSP30237 Limit (V/m)	Injected Test Signal Probe #1 Level (V/m)	Injected Test Signal Probe #2 Level (V/m)	Remarks	Test Sample Response
135.125	5.00	5.18	4.18	AMS Pass Maintain R.F. V/m Level @ Limit	Not Susceptible
137.750	5.00	5.38	4.24	AMS Pass Maintain R.F. V/m Level @ Limit	Not Susceptible
138.187	5.00	5.07	5.07	AMS Pass Maintain R.F. V/m Level @ Limit	Not Susceptible
143.025	5.00	5.38	4.45	AMS Pass Maintain R.F. V/m Level @ Limit	Not Susceptible
145.000	5.00	5.74	4.83	AMS Pass Maintain R.F. V/m Level @ Limit	Not Susceptible
148.000	5.00	5.16	4.58	AMS Pass Maintain R.F. V/m Level @ Limit	↓

TABLE 4.2-2 (continued)
RS03 Test Data, Discrete Frequencies, Vertical Polarization

Vertical Polarization (Discrete Frequencies)					
FREQUENCY (MHz)	SSP30237 Limit (V/m)	Injected Test Signal Probe #1 Level (V/m)	Injected Test Signal Probe #2 Level (V/m)	Remarks	Test Sample Response
198.138	5.00	5.91	5.43	AMS Pass Maintain R.F. V/m Level @ Limit	Not Susceptible
244.000	5.00	5.07	4.21	AMS Pass Maintain R.F. V/m Level @ Limit	Not Susceptible
247.000	5.00	5.62	4.30	AMS Pass Maintain R.F. V/m Level @ Limit	Not Susceptible
258.750	5.00	5.71	4.30	AMS Pass Maintain R.F. V/m Level @ Limit	Not Susceptible
348.000	5.00	5.04	4.06	AMS Pass Maintain R.F. V/m Level @ Limit	Not Susceptible
400.138	30.00	36.20	22.98	AMS Pass Maintain R.F. V/m Level @ Limit	Not Susceptible
400.175	30.00	36.80	22.71	AMS Pass Maintain R.F. V/m Level @ Limit	Not Susceptible
400.875	30.00	36.03	22.66	AMS Pass Maintain R.F. V/m Level @ Limit	↓
414.000	30.00	36.18	27.11	AMS Pass Maintain R.F. V/m Level @ Limit	Not Susceptible
417.125	30.00	36.80	29.68	AMS Pass Maintain R.F. V/m Level @ Limit	Not Susceptible
430.000	30.00	36.13	27.46	AMS Pass Maintain R.F. V/m Level @ Limit	Not Susceptible
436.000	30.00	30.10	24.79	AMS Pass Maintain R.F. V/m Level @ Limit	↓
460.000	5.00	5.18	5.19	AMS Pass Maintain R.F. V/m Level @ Limit	Not Susceptible
528.000	5.00	5.19	5.48	AMS Pass Maintain R.F. V/m Level @ Limit	Not Susceptible
530.000	5.00	5.25	5.08	AMS Pass Maintain R.F. V/m Level @ Limit	Not Susceptible
544.000	5.00	5.06	5.01	AMS Pass Maintain R.F. V/m Level @ Limit	Not Susceptible
594.000	5.00	5.27	4.79	AMS Pass Maintain R.F. V/m Level @ Limit	Not Susceptible
888.250	5.00	5.66	4.04	AMS Pass Maintain R.F. V/m Level @ Limit	Not Susceptible
902.000	5.00	5.66	4.77	AMS Pass Maintain R.F. V/m Level @ Limit	Not Susceptible
915.000	5.00	5.58	4.91	AMS Pass Maintain R.F. V/m Level @ Limit	Not Susceptible
918.000	5.00	5.83	4.92	AMS Pass Maintain R.F. V/m Level @ Limit	Not Susceptible
918.750	5.00	5.84	4.93	AMS Pass Maintain R.F. V/m Level @ Limit	Not Susceptible
922.750	5.00	5.10	4.68	AMS Pass Maintain R.F. V/m Level @ Limit	Not Susceptible
924.000	5.00	5.18	4.90	AMS Pass Maintain R.F. V/m Level @ Limit	Not Susceptible
962.000	20.00	20.64	22.86	AMS Pass Maintain R.F. V/m Level @ Limit	Not Susceptible
1213.000	20.00	20.13	28.19	AMS Pass Maintain R.F. V/m Level @ Limit	↓
1428.000	20.00	20.48	28.66	AMS Pass Maintain R.F. V/m Level @ Limit	Not Susceptible
1430.000	20.00	20.14	28.84	AMS Pass Maintain R.F. V/m Level @ Limit	↓
2025.000	20.00	20.26	25.82	AMS Pass Maintain R.F. V/m Level @ Limit	Not Susceptible
2120.000	20.00	17.19	25.80	AMS Pass Maintain R.F. V/m Level @ Limit	↓
2200.875	20.00	20.11	25.79	AMS Pass Maintain R.F. V/m Level @ Limit	Not Susceptible
2201.875	20.00	20.07	25.72	AMS Pass Maintain R.F. V/m Level @ Limit	Not Susceptible
2205.000	20.00	21.94	25.24	AMS Pass Maintain R.F. V/m Level @ Limit	Not Susceptible
2217.000	20.00	20.72	28.03	AMS Pass Maintain R.F. V/m Level @ Limit	Not Susceptible
2228.400	20.00	20.06	25.10	AMS Pass Maintain R.F. V/m Level @ Limit	Not Susceptible
2246.000	20.00	20.47	25.80	AMS Pass Maintain R.F. V/m Level @ Limit	Not Susceptible
2250.000	20.00	20.09	26.01	AMS Pass Maintain R.F. V/m Level @ Limit	Not Susceptible

TABLE 4.2-2 (continued)
RS03 Test Data, Discrete Frequencies, Vertical Polarization

FREQUENCY (MHz)	Injected Test Signal SSPS/SS237 Level (V/m)	Probe #1 Level (V/m)	Probe #2 Level (V/m)	Remarks	Test Sample Response
[illegible]	[illegible]	[illegible]	[illegible]	AMS Free Mission S.F. [illegible]	Not Susceptible
[illegible]	[illegible]	[illegible]	[illegible]	AMS Free Mission S.F. [illegible]	Not Susceptible
[illegible]	[illegible]	[illegible]	[illegible]	AMS Free Mission S.F. [illegible]	Not Susceptible
[illegible]	[illegible]	[illegible]	[illegible]	AMS Free Mission S.F. [illegible]	Not Susceptible
[illegible]	[illegible]	[illegible]	[illegible]	AMS Free Mission S.F. [illegible]	Not Susceptible
[illegible]	[illegible]	[illegible]	[illegible]	AMS Free Mission S.F. [illegible]	Not Susceptible
[illegible]	[illegible]	[illegible]	[illegible]	AMS Free Mission S.F. [illegible]	Not Susceptible
[illegible]	[illegible]	[illegible]	[illegible]	AMS Free Mission S.F. [illegible]	Not Susceptible
[illegible]	[illegible]	[illegible]	[illegible]	AMS Free Mission S.F. [illegible]	Not Susceptible
[illegible]	[illegible]	[illegible]	[illegible]	AMS Free Mission S.F. [illegible]	Not Susceptible
[illegible]	[illegible]	[illegible]	[illegible]	AMS Free Mission S.F. [illegible]	Not Susceptible
[illegible]	[illegible]	[illegible]	[illegible]	AMS Free Mission S.F. [illegible]	Not Susceptible
[illegible]	[illegible]	[illegible]	[illegible]	AMS Free Mission S.F. [illegible]	Not Susceptible
[illegible]	[illegible]	[illegible]	[illegible]	AMS Free Mission S.F. [illegible]	Not Susceptible
[illegible]	[illegible]	[illegible]	[illegible]	AMS Free Mission S.F. [illegible]	Not Susceptible
[illegible]	[illegible]	[illegible]	[illegible]	AMS Free Mission S.F. [illegible]	Not Susceptible
[illegible]	[illegible]	[illegible]	[illegible]	AMS Free Mission S.F. [illegible]	Not Susceptible
[illegible]	[illegible]	[illegible]	[illegible]	AMS Free Mission S.F. [illegible]	Not Susceptible
[illegible]	[illegible]	[illegible]	[illegible]	AMS Free Mission S.F. [illegible]	Not Susceptible
[illegible]	[illegible]	[illegible]	[illegible]	AMS Free Mission S.F. [illegible]	Not Susceptible
[illegible]	[illegible]	[illegible]	[illegible]	AMS Free Mission S.F. [illegible]	Not Susceptible
[illegible]	[illegible]	[illegible]	[illegible]	AMS Free Mission S.F. [illegible]	Not Susceptible

Fig. 4.2.1. RS03 Test Setup, Biconical Antenna, Horizontal Polarization, 30 MHz - 200 MHz

Fig. 4.2.2. RS03 Test Setup, Biconical Antenna, Vertical Polarization, 30 MHz - 200 MHz

Fig. 4.2.3. RS03 Test Setup, Double Ridge Horn Antenna, Horizontal Polarization, 200 MHz – 1000 MHz

Fig. 4.2.4. RS03 Test Setup, Double Ridge Horn Antenna, Vertical Polarization, 200 MHz – 1000 MHz

Fig. 4.2.5. RS03 Test Setup, Small Double Ridge Horn Antenna, Horizontal Polarization, 1 GHz – 15.5 GHz

Fig. 4.2.6. RS03 Test Setup, Small Double Ridge Horn Antenna, Vertical Polarization, 1 GHz – 15.5 GHz

5.0 CONCLUSIONS

The EMI measured data indicates the AMS Transmitter Adapter, P/N 39136090-301, S/N 1001, and AMS Receiver Adapter, P/N 39136090-302, S/N 1003, are in full compliance with the test requirements specified in SSP 30237.

TABLE 5-1
Test Summary: AMS Tx and Rx Adapters

EMI Test	Description
RE02	Radiated Emissions, Electric Field, 14 kHz - 10 GHz, 13.5 GHz - 15.5 GHz. Passed RE02 on 8/19/2010.
RS03	Radiated Susceptibility, Electric Field, Discrete Frequencies per Table 4-2. Passed RS03 on 8/20/2010.

6.0 APPENDIX

This appendix contains copies of the following documents:

- Task Performance Sheets, 2A1020166
- TRR Checklist
- TRR Attendance Sheet
- Test Request – JSC Form 90
  Test Readiness Review Summary Sheet Form 1850
- Test Readiness Review Board – Form EA-005
- Test Facility Authorized Operators List
- EUT Certified Operators List
- Facility Readiness Statement Memo
- EMI Lab Safety Briefing Sheets
- EMI Lab Sign-In Sheets
- Test in Progress Authorized Personnel Sign
- Pre-Test Checklist
- Test Process Evaluation Sheet
- Test Plan, EV5-10-EMC-019P
- Measured Data
- Integrated Test Hazard Analysis Report

{This page intentionally left blank}

SVM 10.a2.1

Engineering and Science Contract Group

2224 Bay Area Boulevard
Houston, Texas 77058

September 2, 2010
ESCG-4470-10-TEAN-DOC-0130

To:	J. C. Tutt	ESCG
Via:	J. L. Cox JLC	ESCG
Reviewed by:	M. R. Vogel MRV	ESCG
From:	C. S. Clark	ESCG

Subject: **Touch Temperature Analysis for Alpha Magnetic Spectrometer (AMS-02) ISS Digital Data Recording System (DDRS)**

The AMS-02 ISS Digital Data Recording System (DDRS) is used to record high rate data generated by the AMS-02 payload on the International Space Station (ISS). The DDRS consists of a T61p ISS Laptop, two USB/HRDL Adapter Assemblies and various interface cables. The DDRS will be mounted to a flexible arm on an ExPRESS Rack in the U.S. Lab section of ISS. This report will show that the DDRS meets the requirements for bare skin contact temperature.

The T61p ISS Laptop is standard ISS hardware that requires no additional analysis. The cables are passive and also require no touch temperature analysis. This analysis will focus on the USB/HRDL Adapter Boxes, which do dissipate heat.

Each USB/HRDL Adapter Box is a 4.7" x 2.1" x .9" clear anodized 6063 aluminum box containing electronics. The maximum power dissipation for one box is 2.5 watt. It is assumed that heat will be rejected via radiation and convection from 5 sides of the box (one of the 4.7 x 2.1" sides will be mounted using Velcro and is assumed to be perfectly insulated). Assumptions include an emissivity of 0.75 for the box surface, a radiation sink of 86ºF, cabin air temperature of 82ºF, and an airflow rate of 10 ft/min [1].

With these assumptions, the surface of the USB/HDRL Adapter Box reaches a maximum temperature of 119ºF. This is below the 120ºF limit specified for bare skin contact for metallic surfaces [2].

Craig S. Clark
Thermal and Environmental Analysis Section
Engineering and Science Contract Group

Engineering and Science Contract Group

2224 Bay Area Boulevard
Houston, Texas 77058

References

1) "EXpedite the PRocessing of Experiments to Space Station (EXPRESS) Rack Payloads Interface Definition Document", SSP 52000-IDD-ERP, Rev. H, International Space Station Program, September 2009.
2) "Interpretation of NSTS/ISS Payload Safety Requirements", NSTS/ISS 18798 Rev B, NASA- Lyndon B. Johnson Space Center, September 1997.

Distribution

C.S. Clark	ESCG
J. L. Cox	ESCG
A. H. Milliken	ESCG
J. C. Tutt	ESCG
M. F. Fohey	ESCG
L. D. Hill	ESCG
W. B. Gordon	ESCG
Project Library	

SVM 11.b.1:

Engineering and Science Contract Group

2224 Bay Area Boulevard
Houston, Texas 77058

ESCG-4295-10-ADV SY-MEMO-0041
21 September 2010

TO: Leland Hill, Chris Tutt, Phil Mott, Wes Gordon

FROM: Duong V. Nguyen

SUBJECT: AMS-02 ISS DDRS Electrical Power Distribution and Mating/Demating of Powered Connectors

When the Alpha Magnetic Spectrometer (AMS-02) payload is operated on the International Space Station (ISS); it will utilize the ISS Digital Data Recorder System (DDRS) as shown in Figure 1 below to:

- Provide recording (24/7) on-board the ISS for AMS-02 payload data
- Provide play-back capability to downlink lost or corrupted AMS-02 payload data
- Protect for ISS data systems, as well as AMS-02 payload, outages
- Allow for contingency crew monitoring of AMS-02 payload status
- Allow for contingency crew commanding of AMS-02 payload systems.

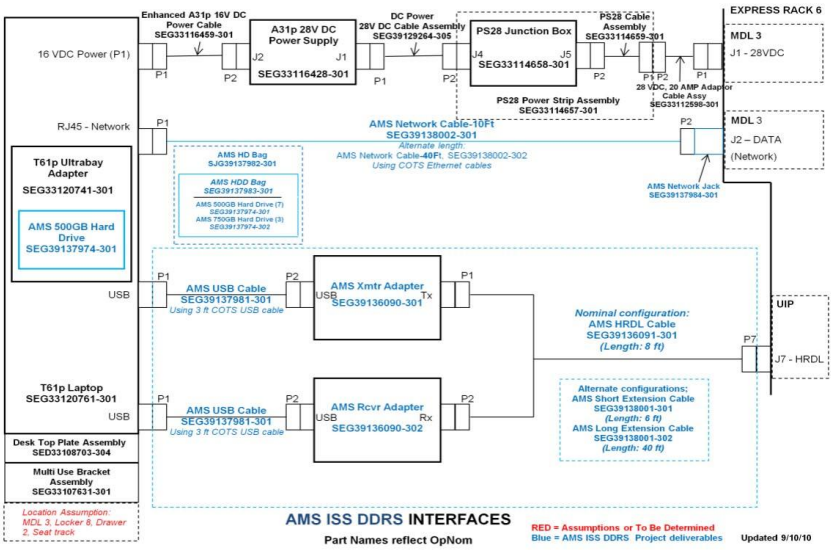

Figure 1. AMS-02 ISS DDRS System Block Diagram

AMS-02 ISS DDRS System consists of:

Government Furnished Equipment

- T61p Laptop Assembly p/n SEG33120761-301
  T61p 160 GB Prime Hard Drive (installed) p/n SEG33120738-301
  T61p Internal Battery (installed) p/n SEG33120739-301
  T61p Ultrabay Adapter (installed) p/n SEG33120741-301
- Enhanced A31p 16VDC Power Cable p/n SEG33116459-301
- A31p 28VDC Power Supply p/n SEG33116428-301
- 28VDC Cable p/n SEG39129264-305
- PS28 Power Strip Assembly p/n SEG33114657-301
  PS28 Junction Box p/n SEG33114658-301
  PS28 Cable p/n SEG33114659-301
- 28VDC, 20A Adapter p/n SEG33112598-301
- Desk Top Plate p/n SED33108703-304
- Multi-Use Bracket p/n SEG33107631-301

AMS Project Furnished Equipment

- AMS Network Cable-10 FT p/n SEG39138002-301
- AMS Network Cable-40 FT p/n SEG39138002-302
- AMS Network Jack p/n SEG39137984-301
- AMS HRDL Cable p/n SEG39136091-301
- AMS USB Cable p/n SEG39137981-301
- AMS Xmtr Adapter p/n SEG39136090-301
- AMS Rcvr Adapter p/n SEG39136090-302
- AMS Short Extension Cable p/n SEG39138001-301
- AMS Long Extension Cable p/n SEG39138001-302
- AMS HD Bag Kit p/n SJG39137982-301
  AMS HDD Bag p/n SEG39137983-301
  AMS 500GB HD p/n SEG39137974-801
  AMS 750GB HD p/n SEG39137974-802

As shown in Figure 1 above, the GFE T61p laptop is powered by ISS Express Rack 28 VDC and will use a GFE power supply and cabling to directly interface with the ISS Express Rack power system. Mating and demating of the GFE power supply will be accomplished by the standard procedures associated with the GFE laptop. GFE hardware will be utilized in accordance with its' GFE certification and will be referenced to satisfy the requirement of Letter TA-92-03.

ENGINEERING & SCIENCE CONTRACT GROUP
JACOBS
ERC | Barrios | GeoControl | Hamilton Sundstrand | MEI

Memorandum
(Continued)

AMS Xmtr/Rcvr Adapters which provides in-line conversion of HRDL signal to a standard USB interface is powered by GFE T61p Laptop USB bus and connected via AMS USB Cables.

GFE T61p Laptop USB bus is rated at 5 +/- .25 VDC and current limited at 500 mA. Since power supply's open circuit voltage is not greater than 32 VDC and designed to limit current to 3 A or less; it meets the low-power connections criteria of letter MA2-99-170 and crew mating/demating of powered connectors of AMS USB Cables for payload operations is allowed.

This memo is submitted as formal closure of Safety Verification Method (SVM) 11.b.1 and 14.a.1 of Hazard Report (HR) Number STD-ISS-DDRS-01. It provides confirmation that ISS powered DDRS System meets circuit protection requirements of letter TA-92-038 and low power critieria of letter MA2-99-170.

SVM 13.c.1

Engineering and Science Contract Group
2224 Bay Area Boulevard
Houston, Texas 77058

ESCG-4530-10-GFESEI-MEMO-0025
22 September 2010

TO: Leland Hill, Chris Tutt, Phil Mott, Wes Gordon

FROM: George R. Brown

SUBJECT: AMS-02 ISS DDRS Safety Data Pack; Hazard Verification 13.c.1 Rotating Equipment

When the Alpha Magnetic Spectrometer (AMS-02) payload is operated on the International Space Station (ISS); it will utilize the ISS Digital Data Recorder System (DDRS) as shown in Figure 1 below to:

- Provide recording (24/7) on-board the ISS for AMS-02 payload data
- Provide play-back capability to downlink lost or corrupted AMS-02 payload data
- Protect for ISS data systems, as well as AMS-02 payload, outages
- Allow for contingency crew monitoring of AMS-02 payload status
- Allow for contingency crew commanding of AMS-02 payload systems.

The only ISS DDRS payload organization provided hardware that could be considered as "rotating equipment" would be the AMS Hard Drives. The two hard drives are the 500GB Hitachi HTS725050A9A364 COTS Serial Advanced Technology Attachment (SATA) drive and the 750GB Western Digital WD7500BPVT COTS SATA drive.

The 500GB Hitachi drive operates at 7200 revolutions per minute (RPM), operates on 5 VDC (±5%) and draws a maximum of 5.5 W peak at startup, 2.0 W during seeks, 1 W during active idle and 0.2 W during standby.

The 750 GB Western Digital drive drive operates at 5400 RPM, operates on 5 VDC (±10%) and draws 1.6 W during seeks, 0.65 W during active idle and 0.2 W during standby.

Both drives have received consumer protection certifications from a number of countries, the CE mark of the units indicate that they are approved for use by the European Commission. The Underwriters Laboratory Recognized Component logo for safety certification is visible on all units as well.

These markings along with the standardized size and operational speeds of the hard disks indicate that these units do not pose a unique uncontrolled hazard as rotating equipment and are safe for use on the ISS.

Memorandum
(Continued)

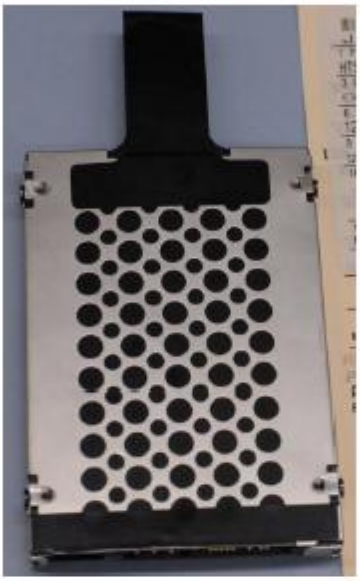

Hitachi 500 GB Hard Disk Drive

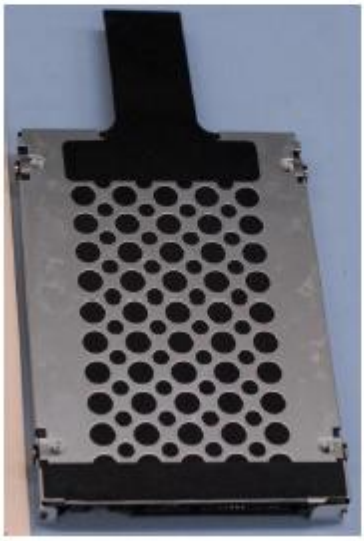

Western Digital 750 GB Hard Disk Drive

SVM 15.b.1 (Excerpts)

DATE PREPARED: 5/20/2010 Revision A: 6/22/2010	**ISS PAYLOAD OFFICE PIRN/EXCEPTION FORM**	**PAGE 1 OF 29**

Doc. No., Rev. & Title: **SSP 57206, SSP 53100, SSP 53109, SSP 53110, SSP 53111, SSP 57213**

EXPRESS Rack Six Hardware Interface Control Document
EXPRESS Rack ICD for Microgravity Experiment Locker/Incubator (MERLIN)
EXPRESS Rack ICD for Potable Water Dispenser (PWD)
EXPRESS Rack ICD for International Space Station Food Warmer (ISSFW)
EXPRESS Rack ICD for Commercial Orbital Transport Services (COTS) Ultra High Frequency (UHF) Communication Unit (CUCU)
Alpha Magnetic Spectrometer-02 Hardware Interface Control Document (AMS)

PIRN No: **57206-NA-0006A**

TITLE:

ER-6 / MERLIN / PWD / ISSFW / CUCU / PS-28 / Condensate Transfer Pump / AMS Laptop Protrusion Exception for Stage ULF5 and Subsequent

Originator:	PIRN Type:	FAX Approval Signatures to this Number:
Name: **Rick Roth** Agency: **Payload Engineering Integration** Phone: **281-961-0464** Email: **James.R.Roth@boeing.com**	☐ Standard PIRN ☒ Exception	**314-777-2866**
Utilization Change Engineer: Name: **Michael Maroon** Agency: **Payload Engineering Integration** Phone: **256-961-1139** Email: **Michael.r.maroon@boeing.com**	SSCN/CR/CEF:	RELATED PIRN No.: **57206-NA-0004A** **57206-NA-0005A**
Agency Tracking No.: **57206-0009**	SYSTEM/ELEMENT AFFECTED & STAGE EFFECTIVITY: **EXPRESS Rack 6 for Stage ULF5 and Subsequent****	

REASON FOR CHANGE OR REQUIREMENT(S) VIOLATION:

The EXPRESS Rack 6 (ER-6) does not meet the Protrusion requirements in SSP 57000, paragraphs 3.1.1.7A/B, 3.1.1.7.2B, 3.1.1.7.3A and 3.1.1.7.5; and SSP 52000, paragraph 3.6.2A/B, 3.6.2.2A, 3.6.2.3.A, and 3.6.2.5. The protrusions are a result of ER-6 subrack payloads (i.e., MERLIN and PWD) and the following Systems hardware in or connected to ER-6: the ISS Food Warmers (ISSFW), the CUCU and the PS-28 cable*. In addition, the AMS Laptop and supporting GFE are added to the ER-6 payload complement in violation of SSP 57000, requirement 3.1.1.7.3A and 3.3.8.1D limiting the rack to a single laptop.

NOTES:

*** This exception only addresses the lateral protrusions due to the power cables for the PS-28. Placement of the PS-28 will NOT be on ER-6 and is the responsibility of the Vehicle.**

**** If the ER-6 subrack complement changes the analysis will be re-performed and a new exception issued.**

Revision A: Amended analysis throughout to include the Condensate Transfer Pump; added exception summary bullets to Proposed Exceptions to SSP 57000 and SSP 52000 Requirements; Rationale for Acceptance: added references to Condensate Transfer Pump in paragraph 1 and protrusion summary paragraph to On-orbit Payload Protrusions (Lateral) summary; Replaced Figure 1 so as to include Pump protrusion and explanatory text in graphic; Section 3: deleted reference to EDV in item 2; added reference to Condensate Transfer Pump in item 5; corrected editorial error in item 6 and added text referring to crew preference placement of AMS Laptop on LAB1P4; corrected editorial error in item 8 and added statement about closure of AMS Laptop when not in use by the Crew; Operational Guidelines and Constraints: replaced 'must' with 'shall' in constraint #4; added constraint #9 regarding Condensate Transfer Pump placement; deleted ECLS MEs

AFFECTED INTERFACING PARTIES

	SIGNATURE & ORGANIZATION	DATE	SIGNATURE & ORGANIZATION	DATE	SIGNATURE & ORGANIZATION	DATE
CONCUR	/s/ Mike Miller/ OZ3	8/6/10	/s/ Tony Sapp/ IVCWG	6/28/10	/s/ Kevin Takada/ MSFC/ECLSS	8/3/10
	/s/ Vic Sanders/ Boeing PEI	8/4/10	/s/ Richard Ellenberger/ NASA HF	6/23/10	/s/ Trent Martin/ AMS PD	7/6/10
	/s/ Bill Bowers/ S&MA	6/27/10	/s/ Wayne Rast/ Crew	7/9/10	N/A OB	
	/s/ Dennis Toney/ EXPRESS Team Lead	6/25/10	/s/ Clif Jones/ POIF	7/3/10	/s/ Amin Rezapour/ ON/CUCU	7/19/10
	/s/ Lee Jordan/ EXPRESS Project Manager	7/6/10			/s/ Rod Jones/ PCB	8/6/10

THE INFORMATION CONTAINED IN THE EXPRESS RACK SIX HARDWARE INTERFACE CONTROL DOCUMENT IS INTERFACE DATA, WHICH IS CLASSIFIED AS EAR99 UNDER THE EXPORT ADMINISTRATION REGULATIONS (ear) (15 CFR 730 et.seq.) RE-EXPORT OR RE-TRANSMISSION IN VIOLATION OF U.S. EXPORT CONTROL LAWS AND REGULATIONS IS PROHIBITED.

SSP 57206, SSP 53100, SSP 53109, SSP 53110, SSP 53111, SSP 57213 Page 11 of 29
57206-NA-0006A

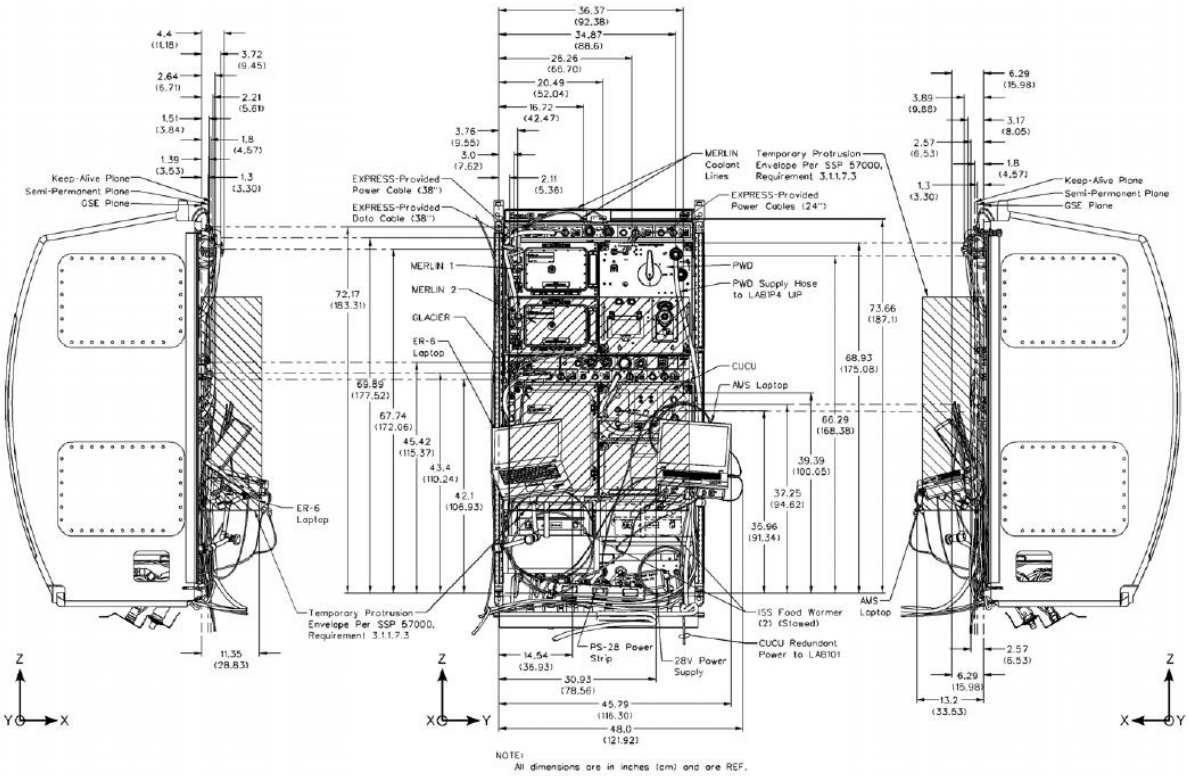

Figure 2 Integrated ER-6 (LAB1O4) Protrusions

4.2 INTRAVEHICULAR ACTIVITY EMERGENCY EGRESS PATH (ME-07)

Description

The purpose of the IVA Emergency Egress Path analysis is to ensure adequate clearance is available to provide crewmembers the capability to escape from the US Lab module in the event of a hazardous condition (e.g., fire, smoke, loss of pressure, atmospheric contamination, etc.). The IVA emergency egress path is a 45 by 32-inch (114.3 x 81.28-cm) rectangular path which may bend and curve through the length of the US Lab module. This path may be encroached upon only by operating volumes for crewmembers at worksites and by equipment in-transit. This analysis satisfies the IVA Emergency Egress Path requirements documented in SSP 57011, the Payload Verification Program Plan, CVDS (ME-07).

Results

There is no clear EEP if all Payload and Systems protrusions are deployed simultaneously to their maximum extent. Consequently, there are three possible paths depending on the Payload and Systems protrusions that are deployed as summarized in Table 4.2-1 and Figures 4.2-1, 4.2-2 and 4.2-3. ALL of these protrusions cannot be deployed simultaneously and maintain a clear EEP. As demonstrated by each figure, there are no ER-6-associated intrusions into the EEP in the depicted combinations. Therefore, no guidelines or constraints are required.

Table 4.2-1 Emergency Egress Path Summary for Multiple Protrusion Scenarios

Path No.	*System/Payload Protrusions Deployed*	*System/Payload Protrusions Stowed*	*Figure No.*	*Requirement Met?*
EEP 1	CEVIS/PPFS deployed	MELFI2 momentary protrusions and the CIR and FIR Optics Benches are stowed	4.2-1	Yes
EEP 2	MELFI2, CIR and FIR Optics Benches	CEVIS and PPFS	4.2-2	Yes
EEP 3	PPFS and FIR Optics Bench	MELFI2 and CIR Optics Bench	4.2-3	Yes

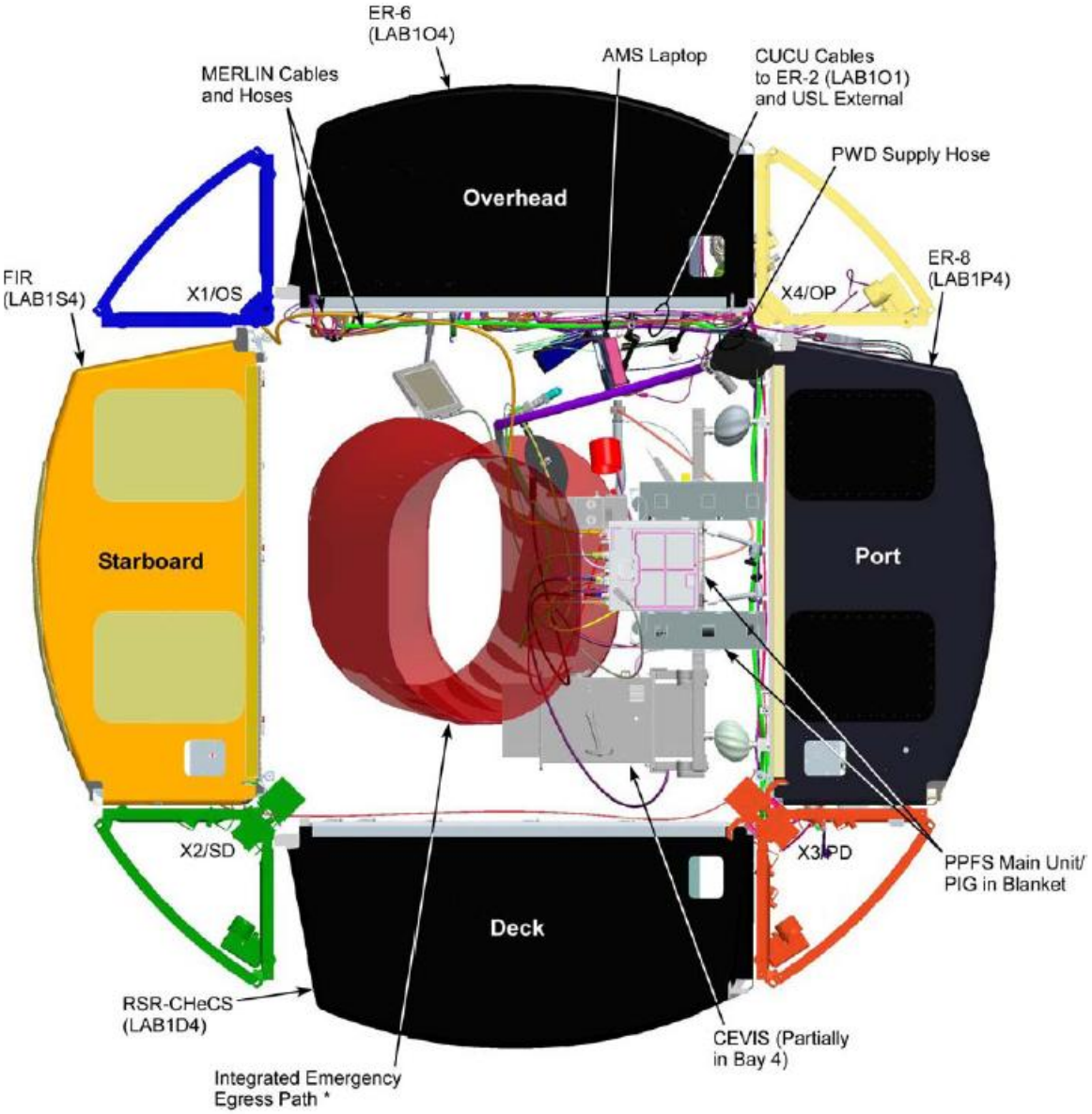

NOTE:
* The Integrated Emergency Egress Path shown is the available Path if the CEVIS and PPFS (not shown) are deployed simultaneously (CIR and FIR Optics Benches and MELFI-2 momentary protrusions are stowed).

Figure 4.2-1 ER-6 (LAB1O4) Protrusions and the Emergency Egress Path – View Looking Aft (Path if CEVIS/PPFS Deployed)

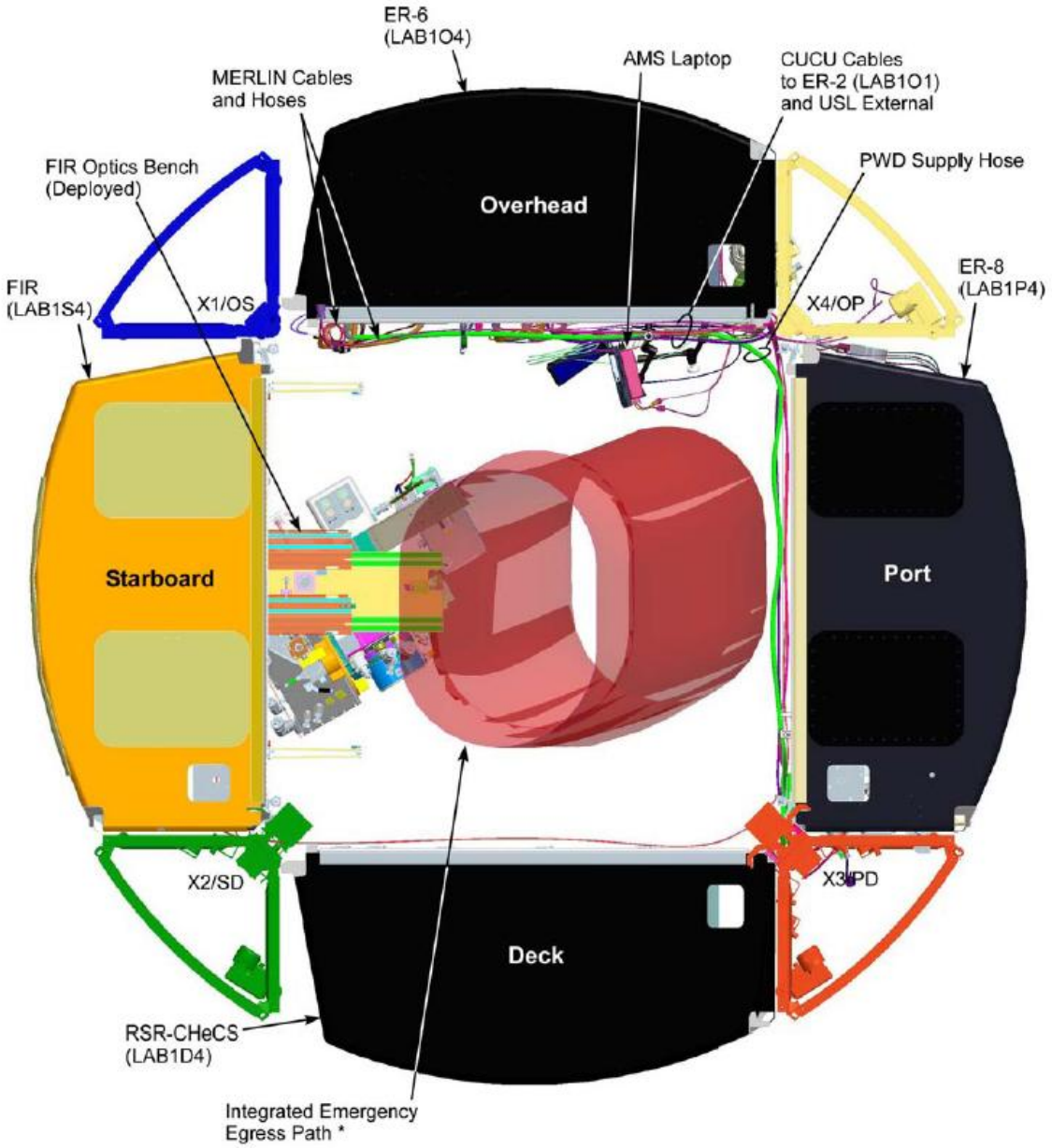

NOTE:
* The Integrated Emergency Egress Path shown is the available Path if the CIR and FIR Optics Benches and the MELFI2 momentary protrusions (not shown) are all deployed simultaneously (CEVIS/PPFS are stowed).

Figure 4.2-2 ER-6 (LAB1O4) Protrusions and the Emergency Egress Path – View Looking Aft (Path if MELFI2, CIR/FIR Optics Benches Deployed)

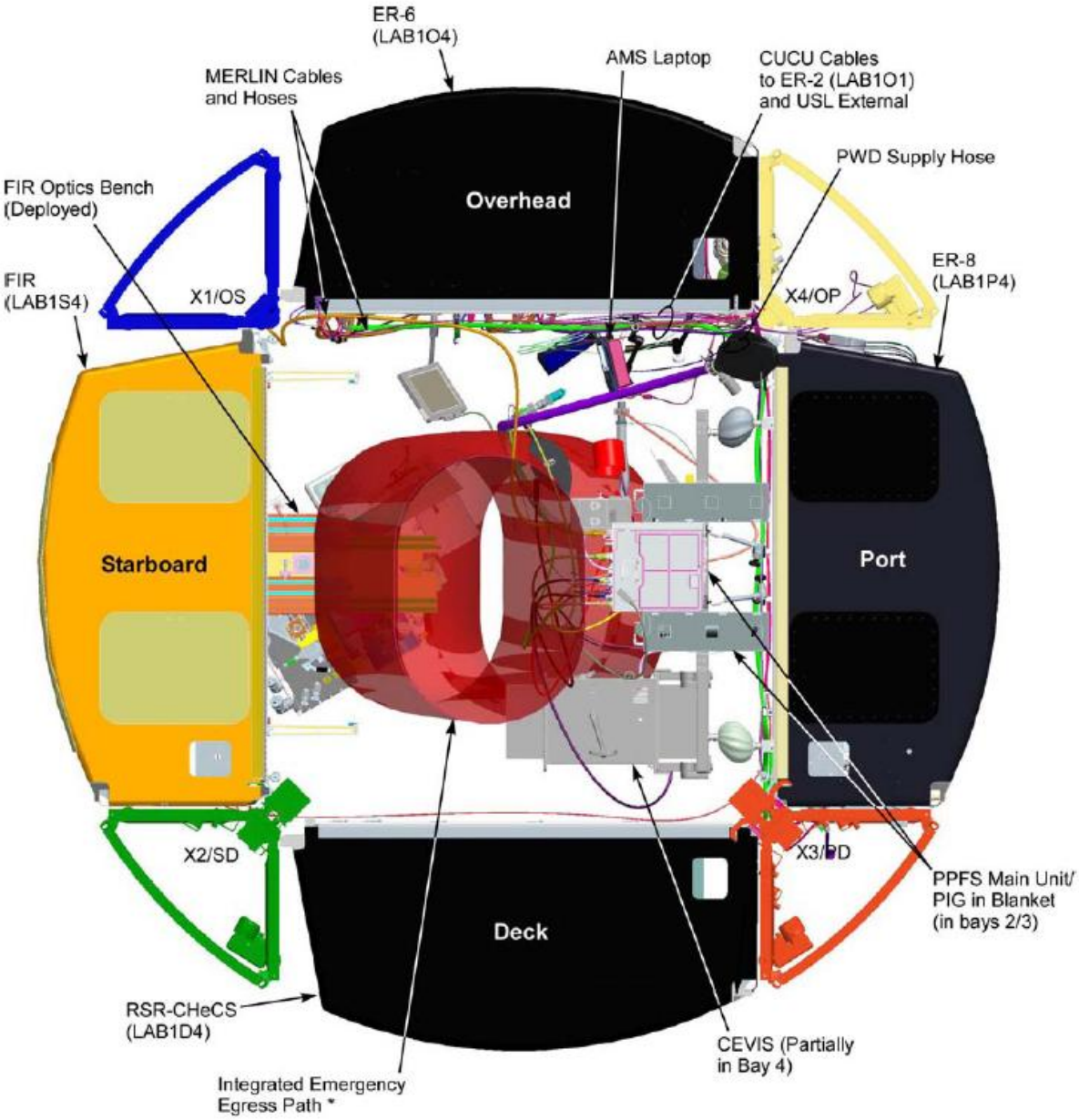

NOTE:
* The Integrated Emergency Egress Path shown is the available Path if the CEVIS/PPFS and FIR Optics Bench are deployed simultaneously (CIR Optics Bench and MELFI-2 momentary protrusions are stowed).

Figure 4.2-3 ER-6 (LAB1O4) Protrusions and the Emergency Egress Path – View Looking Aft (Path if CEVIS/PPFS and FIR Optics Bench Deployed)

9. Fire Detection and Suppression Form

Collectively there is only one established fire zone for the AMS-02 ISS DDRS. That is the operations within the crew habitable volume. This zone compromises the enclosed boxes of the HRDL transmitter and receiver are low power and have no forced air flow. The potential sources are the other powered electrical items: the T61p laptop, laptop power supply, cables and the USB cables connecting it to the HRDL transmitter and receiver boxes. The T61p laptop, its power supply and its cables are GFE items. All components of the AMS-02 ISS DDRS are situated in proximity to each other in the open habitable volume, subject to the airflow of the ECLSS system. The cabin/aisle smoke detection and the crew when present (the ISS DDRS operates continuously, even with crew not present) are the means of detecting a fire event.

Fire Suppression is accomplished by way of the standard ISS portable fire extinguisher with the wide area nozzle attachment. This suppression methodology involves surrounding the suspected hardware involved in the fire event with a volume of CO2 to remove access to oxygen\

Fire Detection and Suppression Reporting Form

a. Number: ISS DDRS-FDS-01			b. Mission Phase: On- Orbit ISS Operations	
c. Payload Name: AMS-02 ISS DDRS				
d. Fire Prevention:				
e. Payload Volume	f. Fire Detection Method	g. Verification Method, Reference and Status	h. Suppression Method	i. Verification Method, Reference and Status
Volume 1 - GFE T61p Laptop	Cabin Volume (aisle) Smoke Sensor	None	ISS Portable Fire Extinguisher	None
Volume 2 - HRDL to USB Adaptor Boxes (2)	Cabin Volume (aisle) Smoke Sensor	None	ISS Portable Fire Extinguisher	None
Volume 3				
Volume 4				
Volume 5				
Volume "n"				

j. SIGNATURES:	PAYLOAD ORGANIZATION	SSP/ISS
PHASE I		
PHASE II		
PHASE III	10/1/10	Michael R. 10/8/2011

JSC Form 1428 (August 14, 2002) (MS Excel)

CERTIFICATE OF NSTS/ISS PAYLOAD SAFETY COMPLIANCE FOR

1) **Hardware addressed on this Certificate:**
   a) Payload Name (Acronym): ISS Digital Data Recording System (ISS DDRS)
      i) If multiple components identify here or add attachment: _____

   b) Launch vehicle(s)/launch Carrier(s)*: STS-133/STS-134 (spares)

   c) Return vehicle/hardware disposal*: ISS DDRS Stays with AMS-02 which stays with ISS through ISS End of Life

   d) Hardware On-Orbit Operations (vehicle/ISS Segment): U. S. Laboratory Module

   Note: This 1114A certification is for operations on the **Shuttle and ISS (excluding the Russian Segment). It also addresses **Shuttle** launch/return. Launch/**return**/disposal on other vehicles requires adherence to the unique certification process as dictated by the applicable vehicle/IP process requirements.*

2) **Certification Applicability:** applicable to

   X Payload Design and Flight Operations

   Ground Support Equipment Design and Ground Operations

3) **The Payload Organization Hereby Certifies that:**

   X For STS, the Payload Hardware Identified on this Form Complies with all Applicable Requirements of the NSTS 1700.7 (current issue), "Safety Policy and Requirements for Payloads Using the National Space Transportation System," and/or KHB 1700.7, "Space Shuttle Payload Ground Safety Handbook."

   X For ISS, the Payload Hardware Identified on this Form Complies with all Applicable Requirements of the NSTS 1700.7 (current issue), "Safety Policy and Requirements for Payloads Using the National Space Transportation System," NSTS 1700.7 ISS Addendum (current issue), "Safety Policy and Requirements for Payloads Using the International Space Station," and/or KHB 1700.7, "Space Shuttle Payload Ground Safety Handbook."

   1) The Safe Design Life is 11+ years (life of ISS, no safety issue with life identified) Failure/Operation does not result in safety risk from Launch(11/10) (date). This is the time period the payload can be retained at or restored to a specified safe condition using prescribed resources and procedures. The limiting component(s) the determined this safe design life Is (are) Hard disk drive functional life (not safety critical) Multiple replacements are flown, which requires (recalibration, repair, replacement, etc). (Additional Analysis to extend life.)

   2) The Safe Operational Life is 11+ years (life of ISS, no safety issue with life identified) Failure/Operation does not result in safety risk from Launch(11/10) (date). The limiting component(s) that determined this safe operational life is (are) Hard disk drive functional life (not safety critical) Multiple replacements are flown, which requires (recalibration, repair, replacement, etc).

4) **Approved Waivers/Deviations:** None

5) **Approved (Payload Organization Manager) and Date:**

   10/1/10

JSC Form 1114A (Rev November 10, 2008) (MS Word September 1997)

NSTS/ISS PAYLOAD SAFETY VERIFICATION TRACKING LOG

a. FLIGHT X GROUND

c. ISS Digital Data Recording System (DDRS)(AMS-02)STS-133/ULF-5 d. DATE: September 30, 2010

e. Log No.	f. Hazard Report Number	g. Safety Verification Number	h. Safety Verif. Method (Identify Procedures By Number and Title)	i. Ground Operation(s) Contrained	j. Independent Verification Required (Yes/No)	k. Scheduled Completion Date	j. Completion Date	m. Method of Closure (Comments)
1	STD-ISS DDRS-F01	4.a.1	Sharp Edge, Corners and/or Protrusion inspection of as built hardware	No	No	10/20/2010	10/6/2010	Human Factors Implementation Team (HFIT) Hardware Certificate of Compliance for AMS-02 ISS DDRS, 10/6/2010
2	STD-ISS DDRS-F01	5.a.1	Inspection, all fiber optic cables and interfaces contained per TPS Build	No	No	10/8/2010	10/6/2010	JSC TPS No 2A1020182, "Fabricate HRDL Cable Assembly P/N SEG39136091-301 S/N 1001 (CI)," 9/20/2010, JSC TPS 2A1020183, "Fabricate HRDL Cable Assembly SEG39136091-301 S/N 1002 (CI)," 9/23/2010, JSC TPS 2A1020148, "Fabricate Extension Cable Assemblies P/N SEG3913800-301 S/N 1001 (CI) and 1002 (CI)," 9/28/10, JSC TPS 2A1020149, "Fabricate Extension Cable Assemblies P/N SEG39138001-302 S/N 1003 (CI) and 1004 (CI)," 10/5/2010
3	STD-ISS DDRS-F01	7.a.1	Acceptance of offgassing test results for transmitter and receiver adapter boxes.	No	No	10/18/2010	10/15/2010	MATL-10-065A, "Alpha Magnetic Spectrometer (AMS-02) ISS Digital Data Recording System (DDRS)," dated 10/15/2010