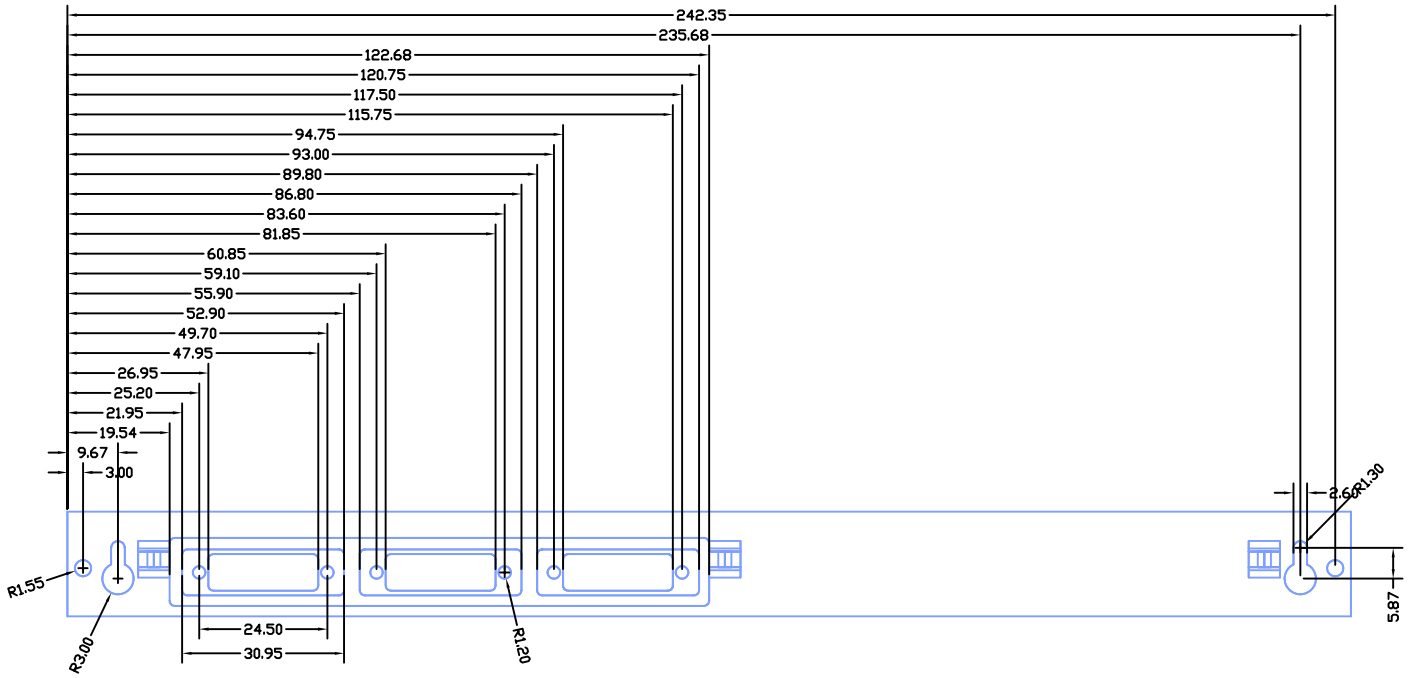

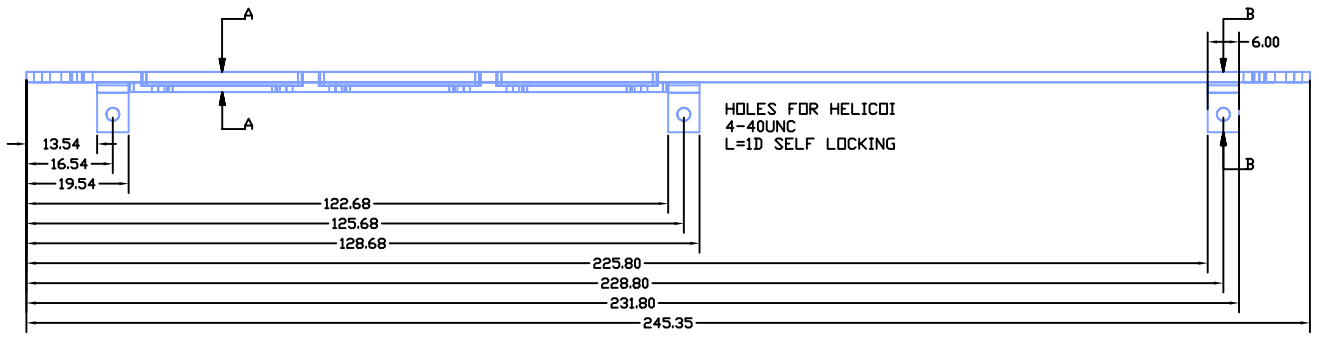

SEZ. A-A

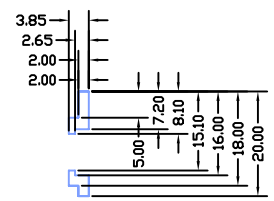

SEZ. B-B

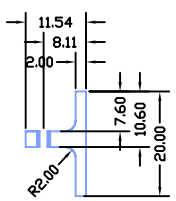

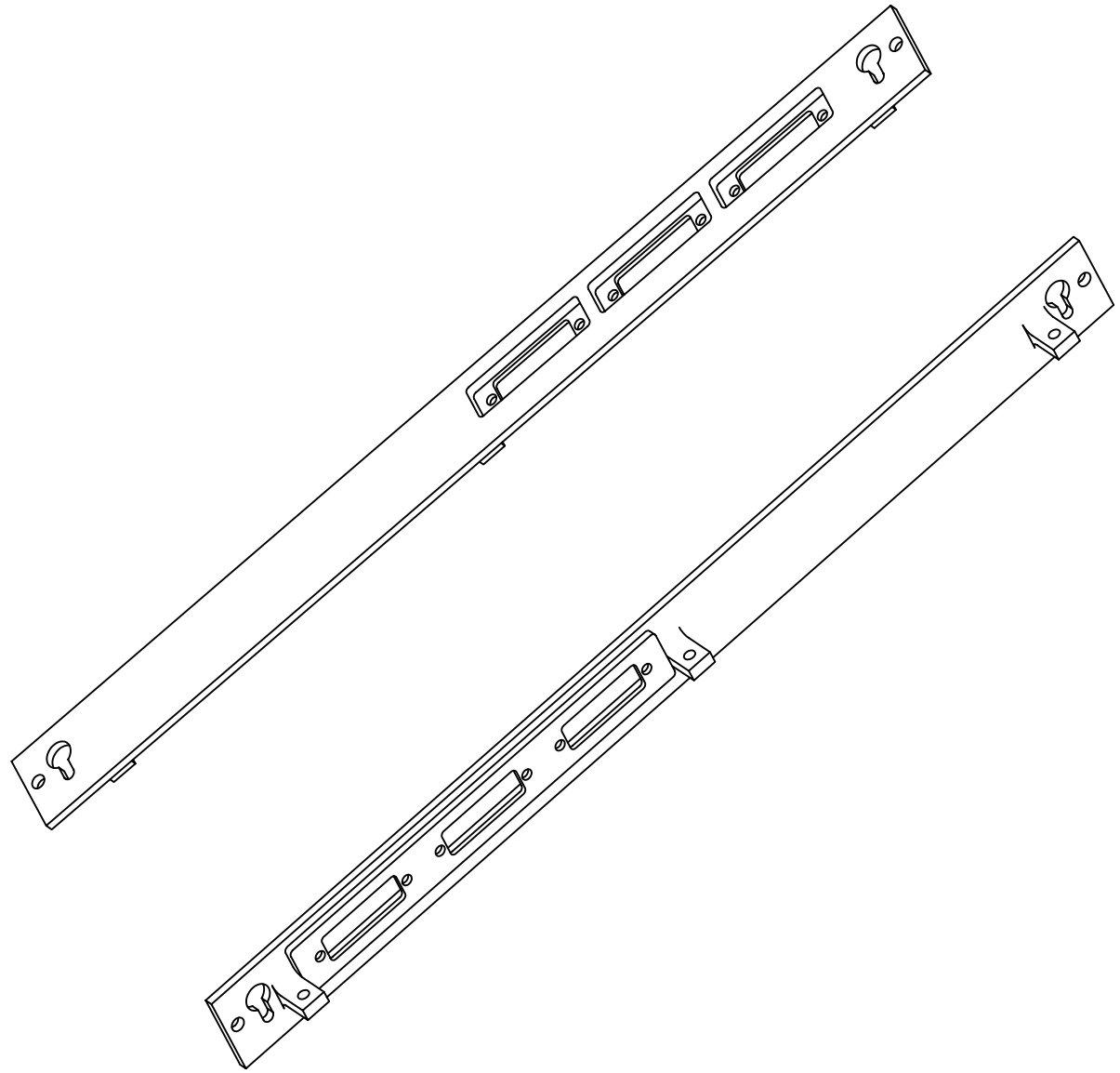

issue	changes	date	author	approval
		19 Oct 06		

material	surface roughness	
drawing nr AL 7075-T7351	surface treatment	general tolerance
project	name AMS-02 ASTE FRONT PANEL	

CENTER FOR ADVANCED RESEARCH IN SPACE OPTICS
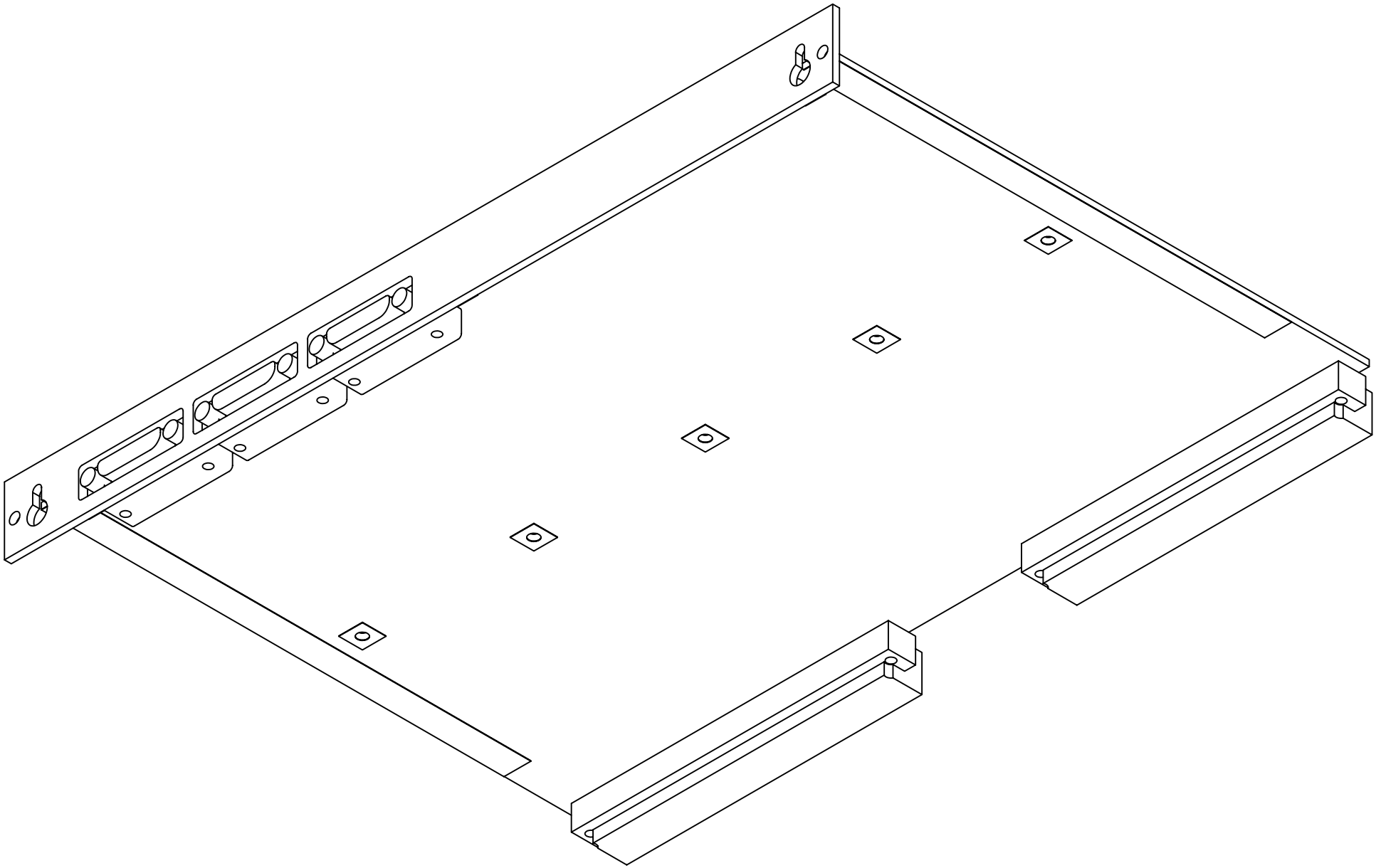
size	scale	sheet
	1:1