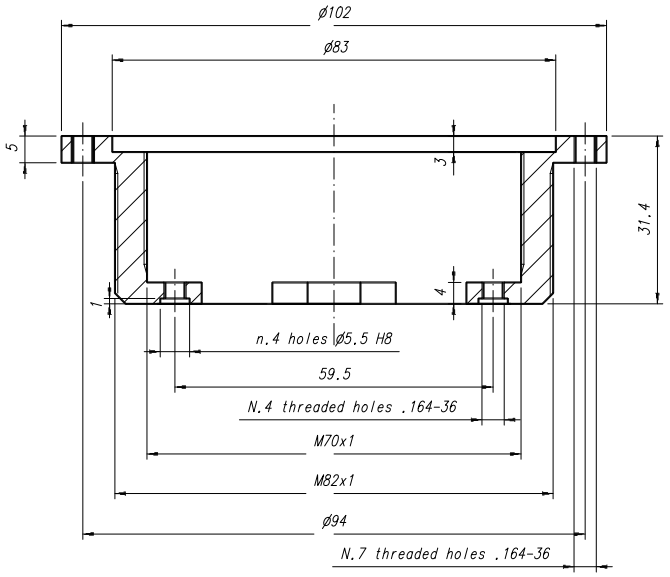

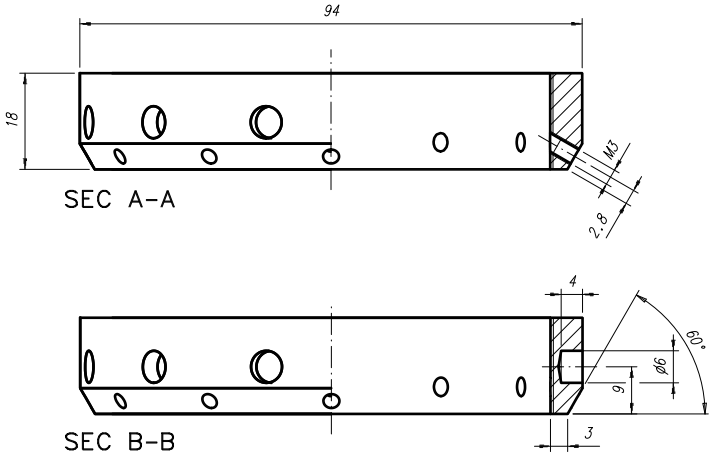

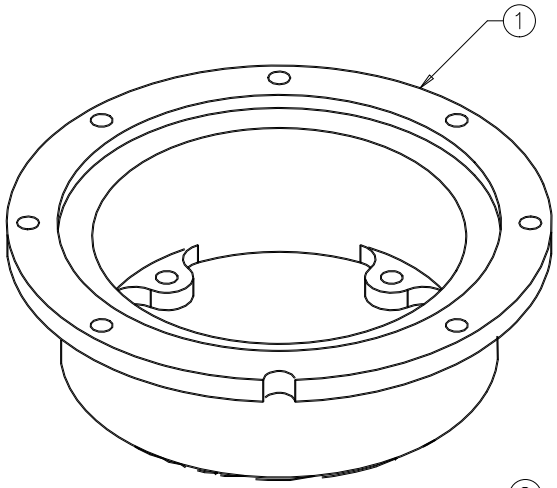

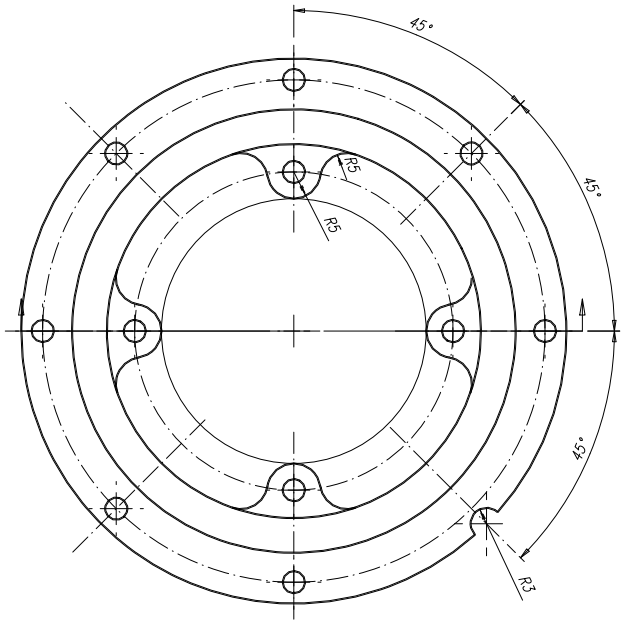

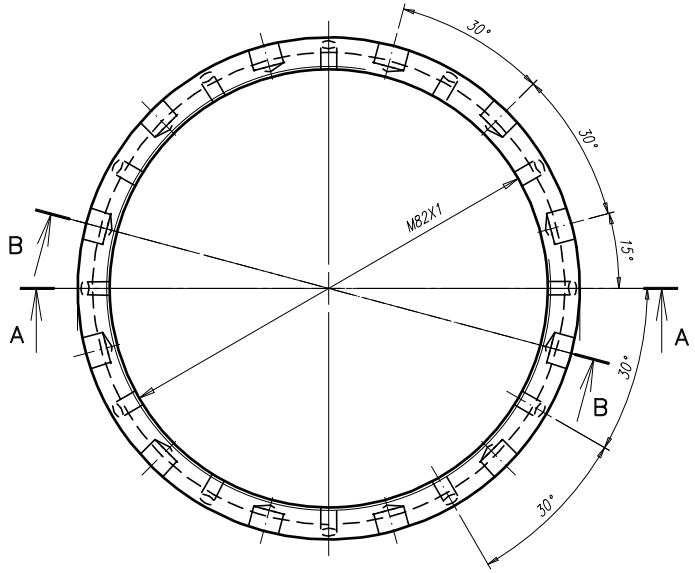

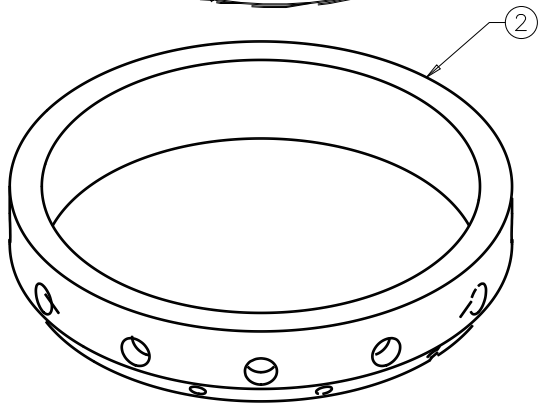

REV.	DATE	DRAWN	CHECKED	APPROVED
0	25/03/2005	CORRADO GARGIULO		

TOLERANCING ISO 8015	GENERAL TOLERANCES: ISO 2768 - mK	TITLE: AMS_02 STAR-TRACKER	
DIMENSION: mm / SIZE: A3	SCALE: 1:1	DWG NO: ASTS COLLAR&BACK COLLAR	
		CERN NO: ASTS_242.120&130	

SERVIZIO PROGETTAZIONE MECCANICA
IST. NAZIONALE FISICA NUCLEARE
SEZIONE ROMA 1
PLE A. MORO, 2
I-00185 ROMA
TEL: +39-06.49.91.42.56
FAX: +39-06.44.54.875

ITEM	DESCRIPTION	QT.	MATERIAL	REFERENCE
2	ASTSU_BACKCOLLAR	1	AL 7075 T7351	242.130
1	ASTSU_COLLAR	1	AL 7075 T7351	242.120