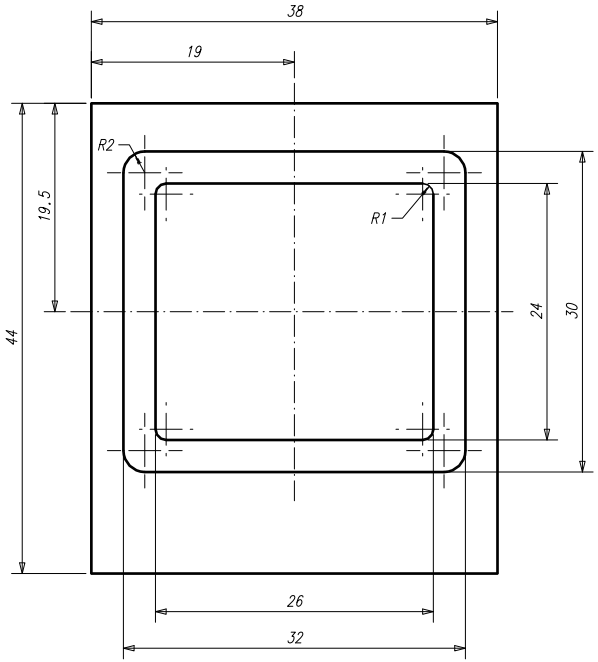

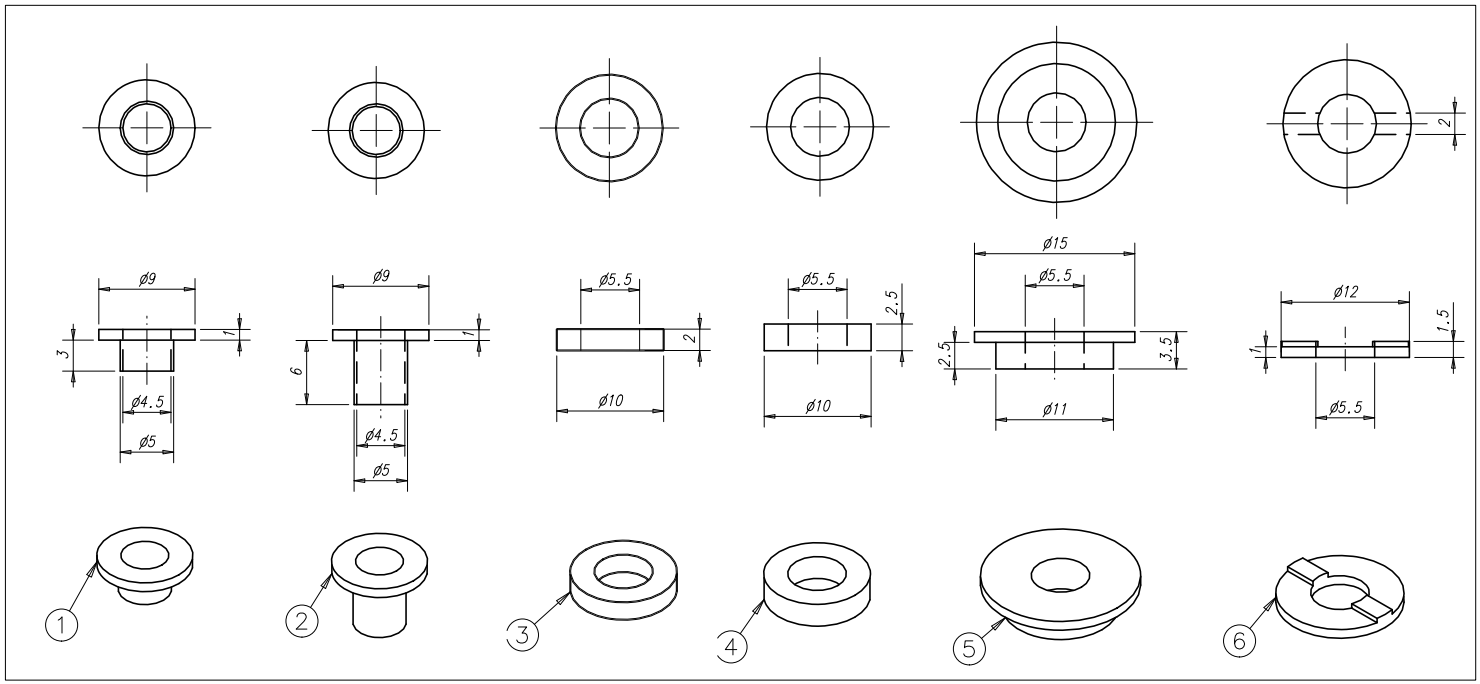

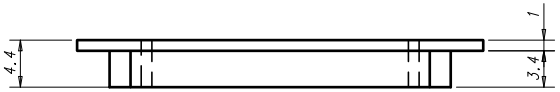

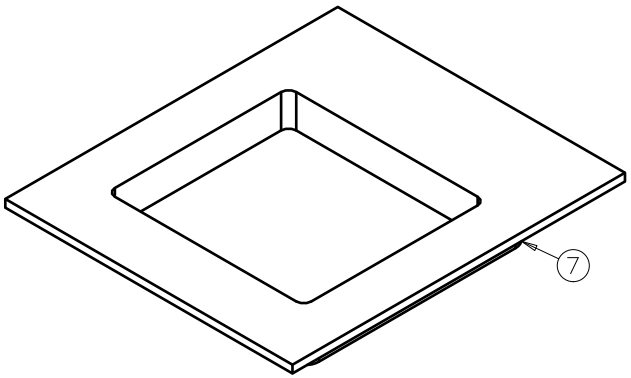

ITEM	DESCRIPTION	QT.	MATERIAL	REFERENCE
7	ASTST_BLOCK_INSULATION	2	G10	243.401
6	ASTSU_WASHER_EL_B	3	G10	242.164
5	ASTSU_INSERT2_TH_CCD	1	G10	242.172
4	ASTU_WASHER_EB_LINK2	1	G10	242.169
3	ASTU_WASHER_EB_LINK1	1	G10	242.169
2	ASTT_EB_LINK_WASHER	2	G10	243.203
1	ASTT_CCD_LINK_WASHER	1	G10	243.103

REV.	DATE	DRAWN	CHECKED	APPROVED
0	25/03/2005	Corrado GARGIULO		

TOLERANCING ISO 8015

GENERAL TOLERANCES: ISO 2768 - mK

TITLE: AMS_02_STAR TRACKER

DIMENSION: mm

SIZE: A3

SCALE: 2:1

DWG NO: ASTsU_WASHER_THERMAL

INFN
SERVIZIO PROGETTAZIONE MECCANICA
IST. NAZIONALE FISICA NUCLEARE
SEZIONE ROMA 1
PLE A. MORO, 2
I-00185 ROMA
TEL: +39-06.49.91.42.56
FAX: +39-06.44.54.875

CERN NO:
ASTS_243.103&203&401
ASTS_242.164&169&172