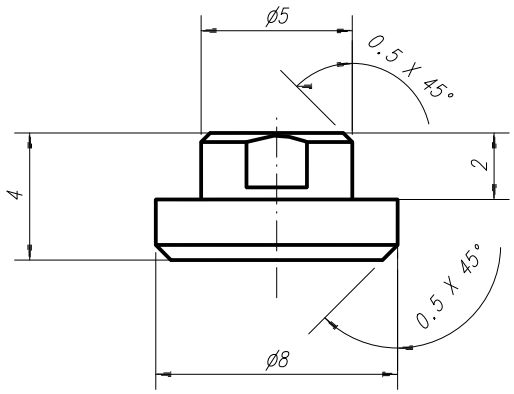


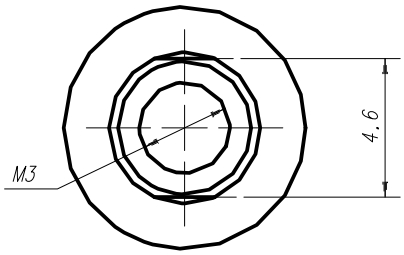


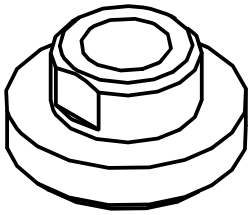

| | | | | | |
|---|---|---|---|---|---|
| | ASTL_I/f-CFFL INSERT | | 2 O | TI6AL4V | 242.222 |
| ITEM | DESCRIPTION | | QT. | MATERIAL | REFERENCE |
| O | 25/03/2005 | CORRADO GARGIULO | NAME | | NAME |
| REV. | DATE | DRAWN | CHECKED | | APPROVED |

| | | | |
|---|---|---|---|
| TOLERANCING ISO 8015 | | GENERAL TOLERANCES: ISO 2768 - mK | TITLE: AMS_02 STAR TRACKER |
| DIMENSION: mm | SIZE: A4 | SCALE: 4:1 | |

SERVIZIO PROGETTAZIONE MECCANICA
IST. NAZIONALE FISICA NUCLEARE
SEZIONE ROMA 1
PLE A. MORO, 2
I-00185 ROMA
TEL: +39-06.49.91.42.56
FAX: +39-06.44.54.875

DWG NO: ASTL_I/f-CFFL INSERT

CERN NO: ASTS_242.221