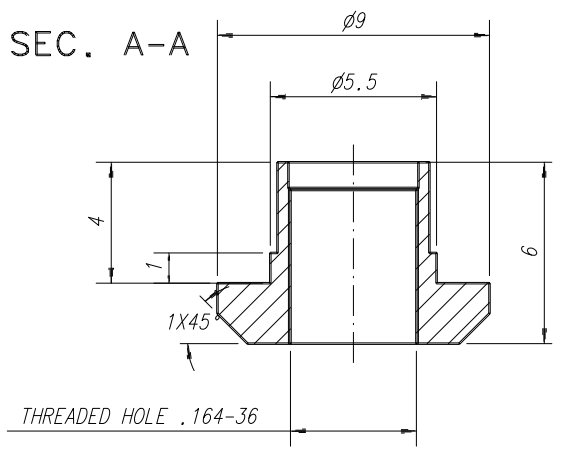

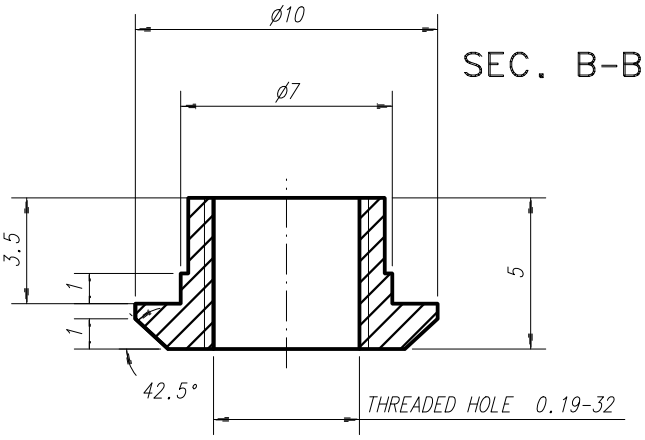

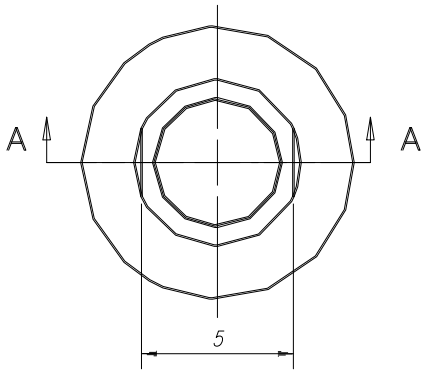

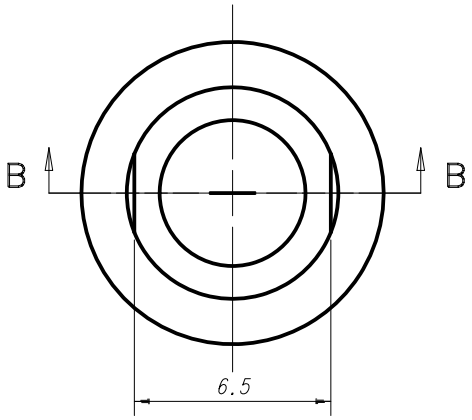

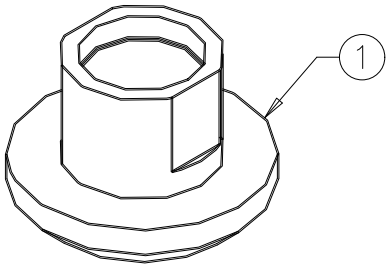

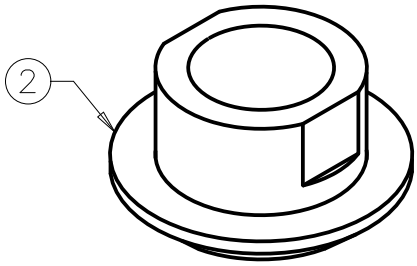

ITEM	DESCRIPTION	QT.	MATERIAL	REFERENCE
2	ASTS_L_I/F_U_insert	8	TI6AL4V	242.121
1	ASTSU_Insert_Th_CCD and Eb_link	3	TI6AL4V	242.171 & 242.168

REV.	DATE	DRAWN	CHECKED	APPROVED
0	25/03/2005	CORRADO GARGIULO	NAME	NAME

TOLERANCING ISO 8015

GENERAL TOLERANCES: ISO 2768 - mK

DIMENSION: mm | SIZE: A4 | SCALE: 4:1

TITLE: AMS_02 STAR TRACKER

SERVIZIO PROGETTAZIONE MECCANICA
IST. NAZIONALE FISICA NUCLEARE
SEZIONE ROMA 1
PLE A. MORO, 2
I-00185 ROMA
TEL: +39-06.49.91.42.56
FAX: +39-06.44.54.875

DWG NO: ASTSL_I/F_U_INSERT &ASTSU_INSERT_TH_CCD_EL_BOARD

CERN NO: ASTS_242.171&168