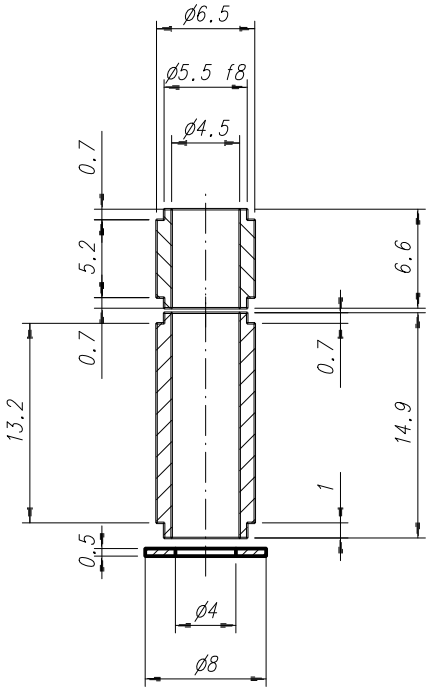

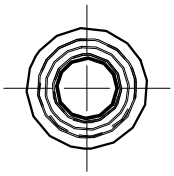

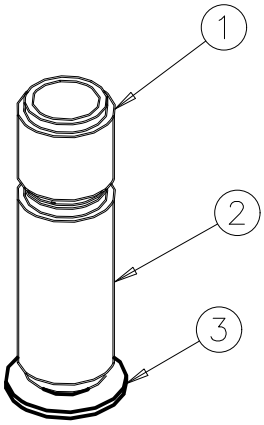

ITEM	DESCRIPTION	QT.	MATERIAL	REFERENCE
3	ASTSU_FEET_WASHER	4	G10	242.142
2	ASTSU_FEET_CCD_CCD1	4	TI6AL4V	242.144
1	ASTSU_FEET_COLLAR_CCD	4	TI6AL4V	242.143

REV.	DATE	DRAWN	CHECKED	APPROVED
0	25/03/2005	NAME	NAME	NAME

TOLERANCING ISO 8015

GENERAL TOLERANCES: ISO 2768 - mK

TITLE: AMS_02 STAR TRACKER

DIMENSION: mm | SIZE: A4 | SCALE: 2:1

DWG NO: ASTSU_FEET_CAMERA_CCD

SERVIZIO PROGETTAZIONE MECCANICA
IST. NAZIONALE FISICA NUCLEARE
SEZIONE ROMA 1
PLE A. MORO, 2
I-00185 ROMA
TEL: +39-06.49.91.42.56
FAX: +39-06.44.54.875

CERN NO: ASTS_242.140