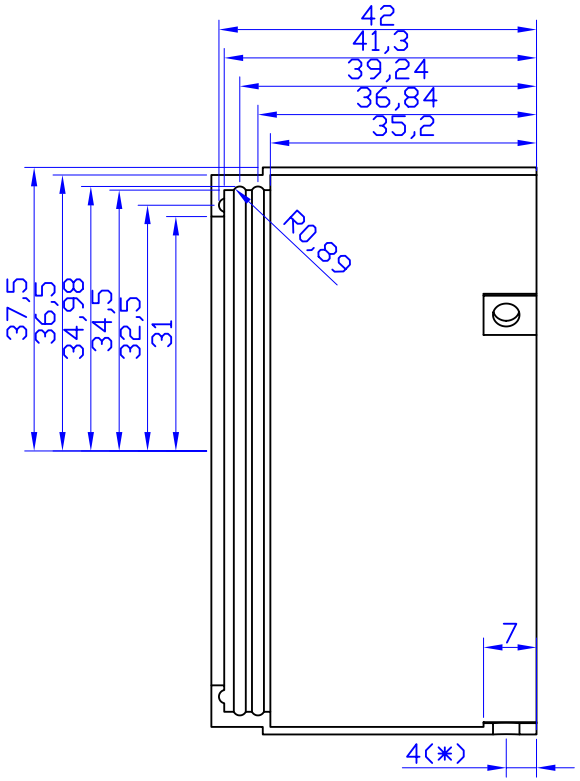

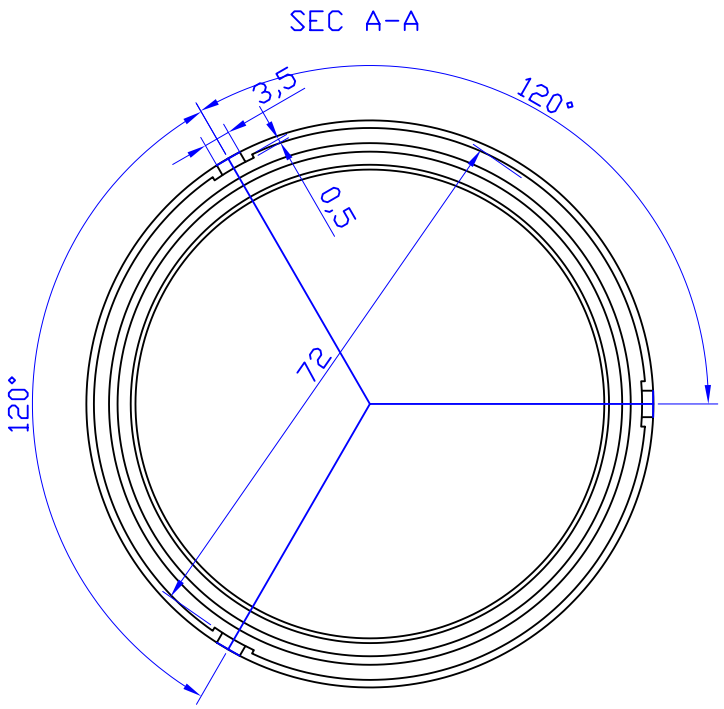

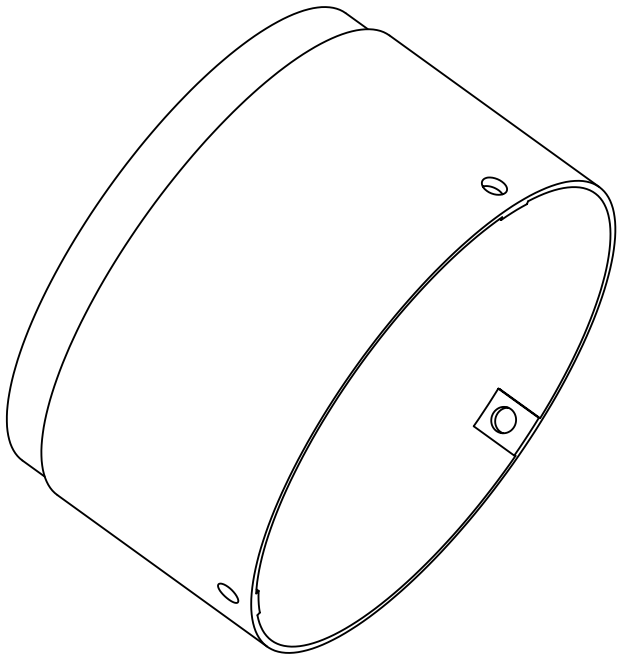

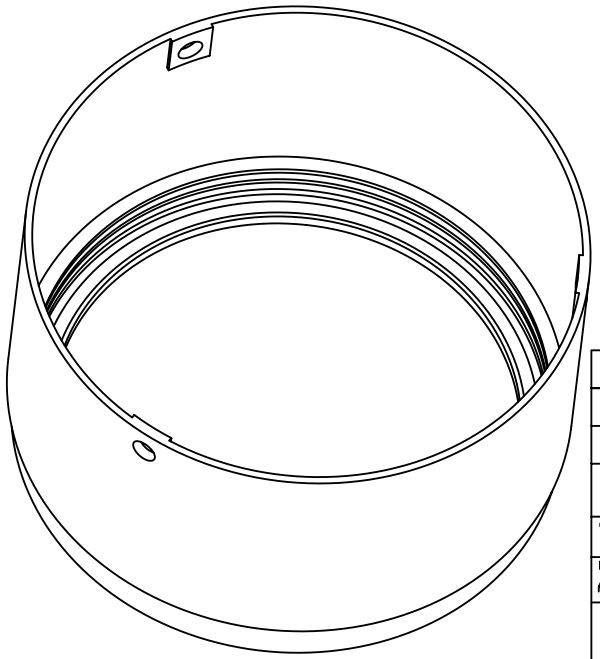

3.1		12/02/07	P.T.	
issue	changes	date	author	approval

material: AL 7075	surface roughness	
drawing nr	surface treatment	general tolerance
project: AMS-02 AMICA	name: FILTER COVER 244.201	
CENTER FOR ADVANCED RESEARCH IN SPACE OPTICS	size: A4	scale: 1:1 / sheet: 1/2

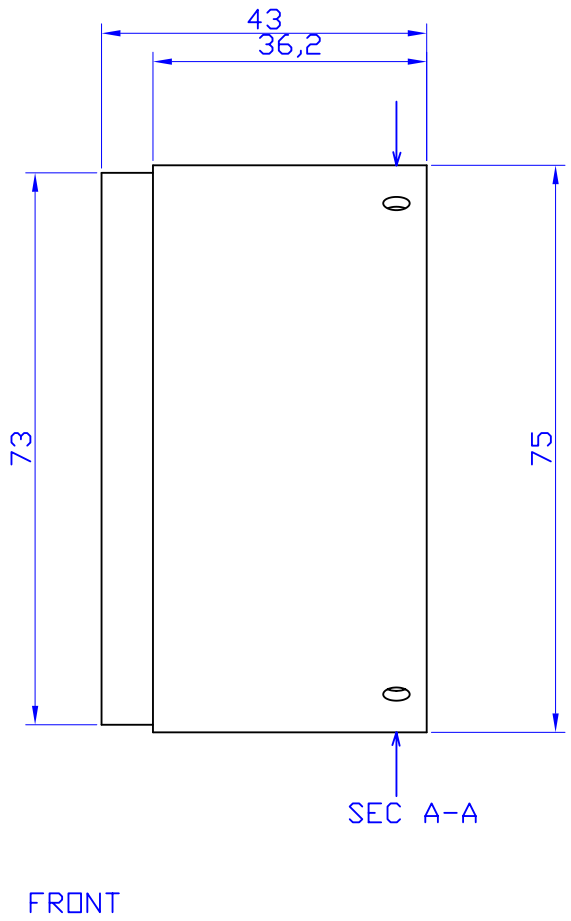

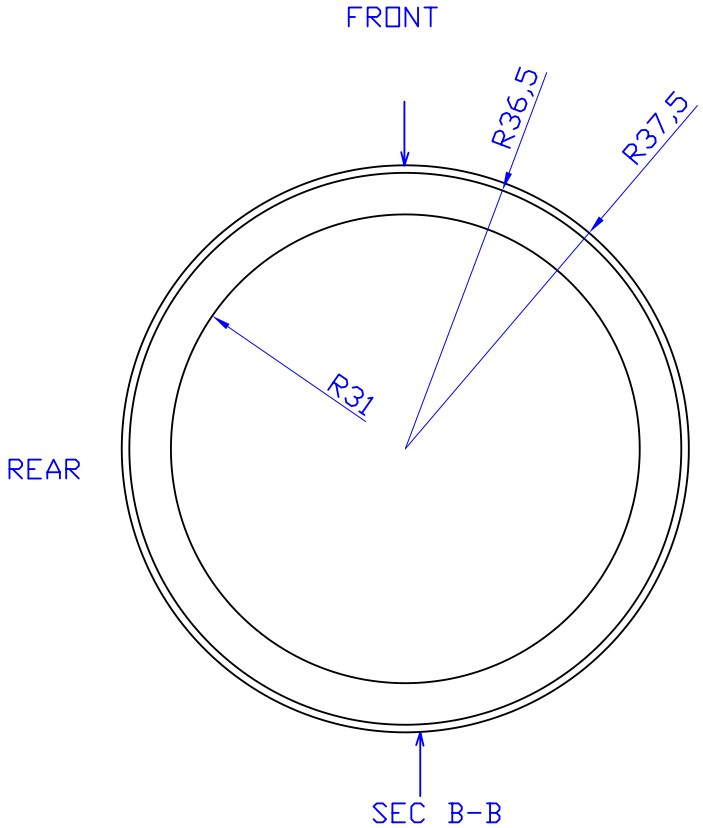

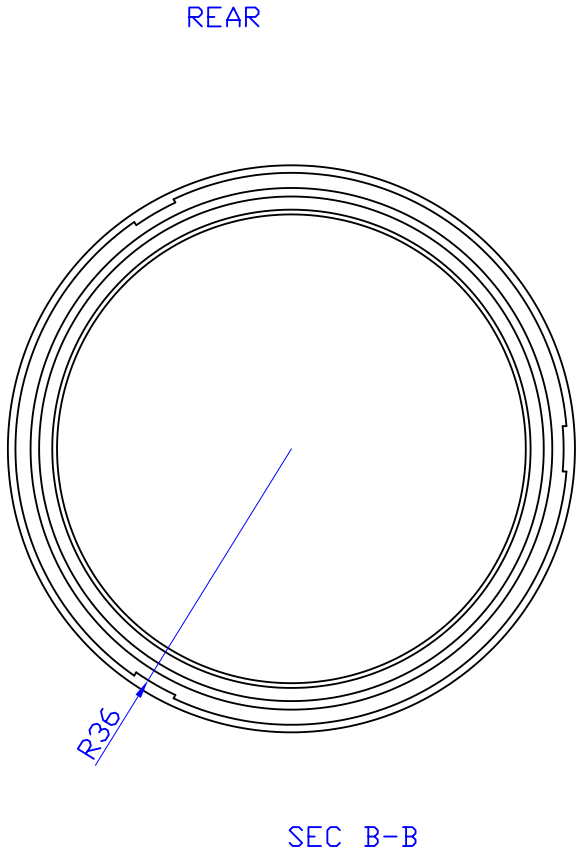

3.1		12/02/07	P.T.	
issue	changes	date	author	approval

material: AL 7075	surface roughness	
drawing nr	surface treatment	general tolerance
project: AMS-02 AMICA	name: FILTER COVER 244.201	
CENTER FOR ADVANCED RESEARCH IN SPACE OPTICS	size: A4	scale: 1:1 / sheet: 2/2

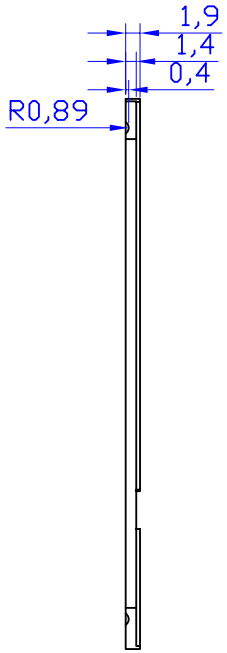

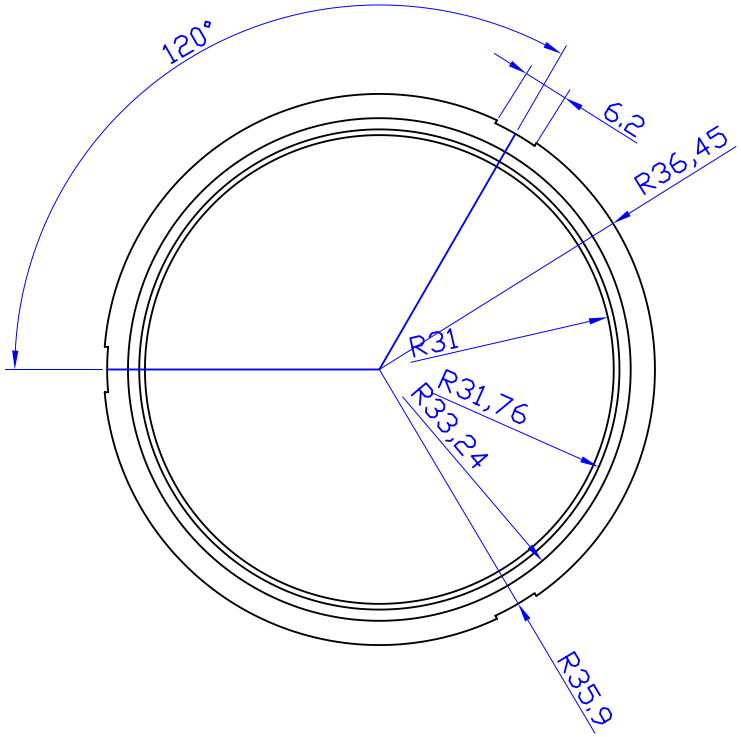

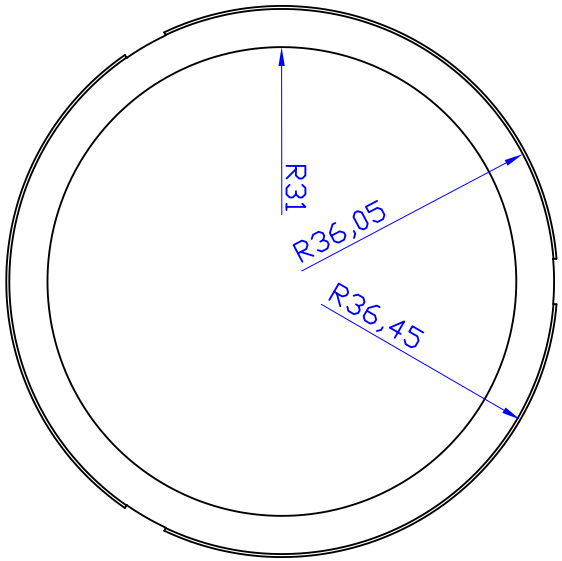

3.1		12/02/07	P.T.	
issue	changes	date	author	approval

material	surface roughness	
drawing nr	surface treatment	general tolerance
project AMS-02 AMICA	name RING 244.204	
CARSO CENTER FOR ADVANCED RESEARCH IN SPACE OPTICS	size A4	scale 1:1	sheet 1/2

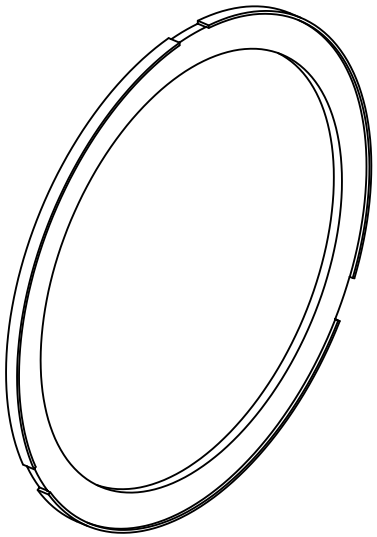

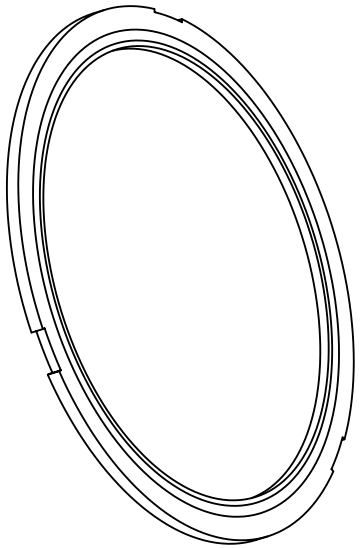

3.1	244.201	12/02/07	P.T.	
issue	changes	date	author	approval

material	surface roughness	
drawing nr	surface treatment	general tolerance

project
AMS-02 AMICA

name
RING
244.204

CENTER FOR ADVANCED RESEARCH IN SPACE OPTICS

size	scale	sheet
A4	1:1	2/2

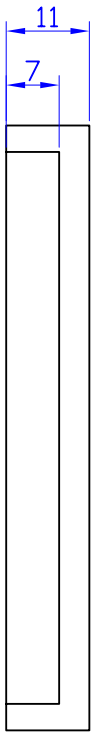

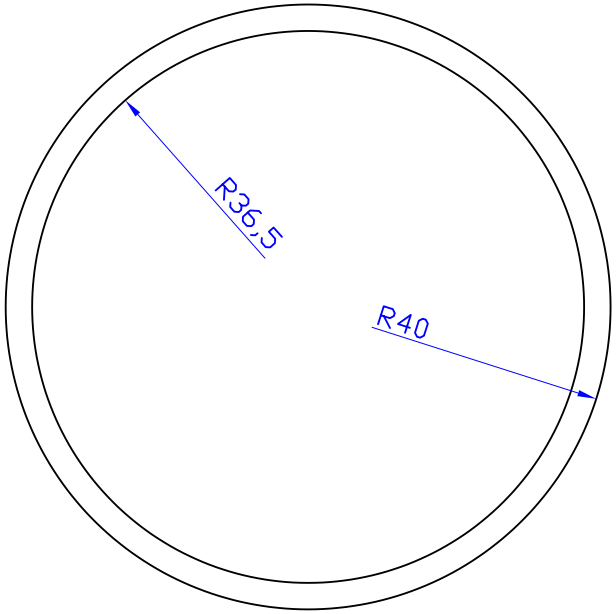

3.1		12/02/07	P.T.	
issue	changes	date	author	approval

material	surface roughness	
drawing nr	surface treatment	general tolerance
project AMS-02 AMICA	name LENS CAP	
CENTER FOR ADVANCED RESEARCH IN SPACE OPTICS	size A4	scale 1:1
		sheet 1/1

2-038

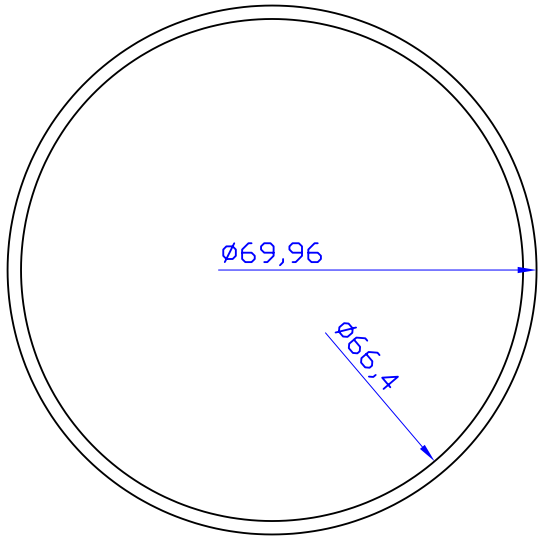

2-037

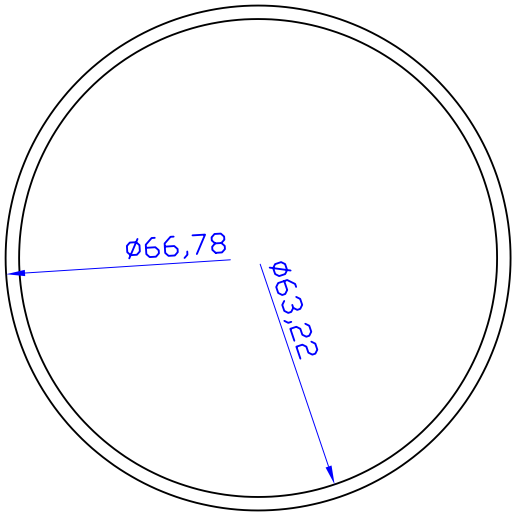

3.1		12/02/07	P.T.	
issue	changes	date	author	approval

material	surface roughness	
drawing nr	surface treatment	general tolerance
project AMS-02 AMICA	name O-RINGS 244.202&244.203	
CENTER FOR ADVANCED RESEARCH IN SPACE OPTICS	size A4	scale 1:1	sheet 1/1