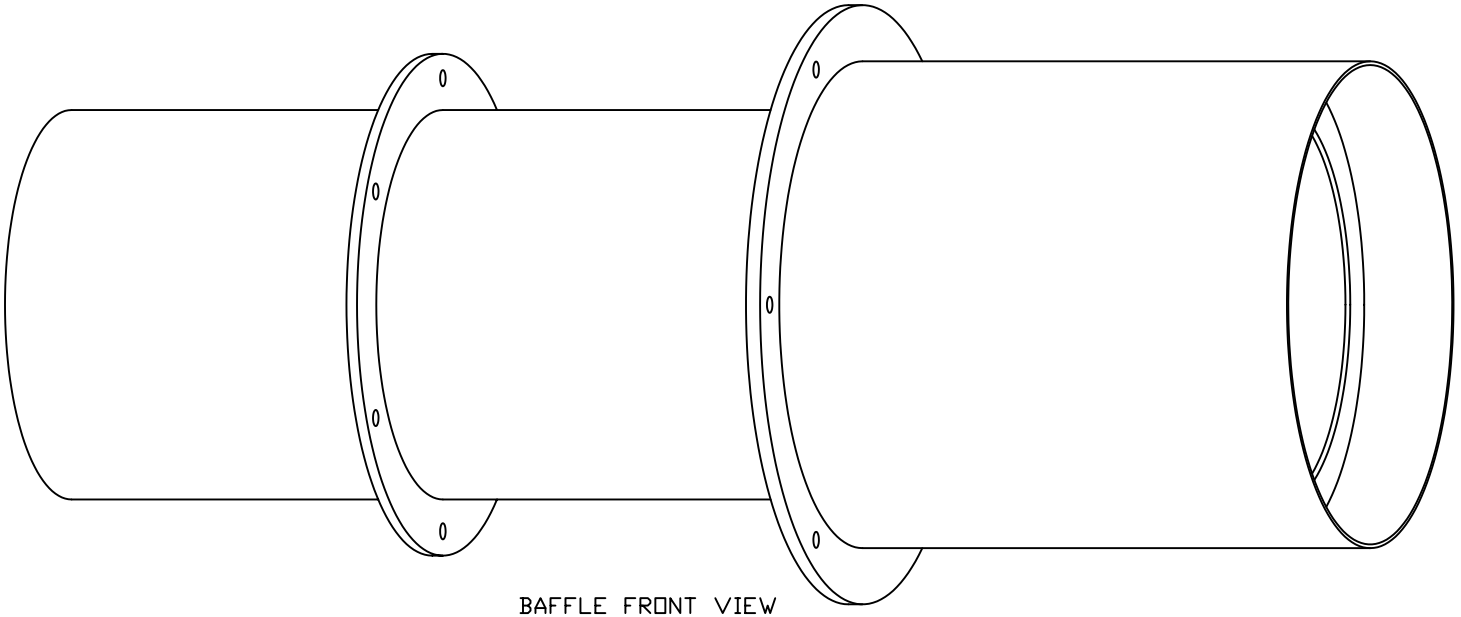

BAFFLE FRONT VIEW

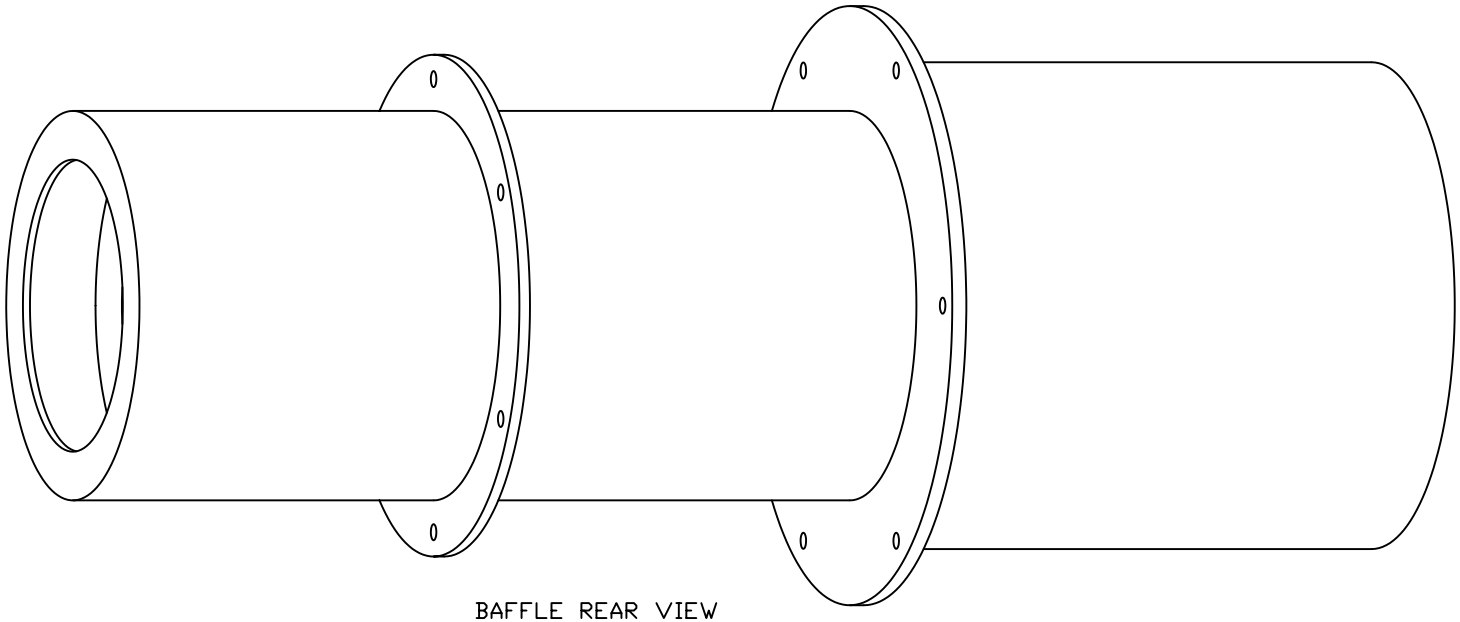

BAFFLE REAR VIEW

		22/03/07	P.T.	
issue	changes	date	author	approval

material	surface roughness	
drawing nr	surface treatment	general tolerance
project: AMICA	name: AMICA FOR AMS-02 BAFFLE 241.001	

CENTER FOR ADVANCED RESEARCH IN SPACE OPTICS

size	scale	sheet
		1/5

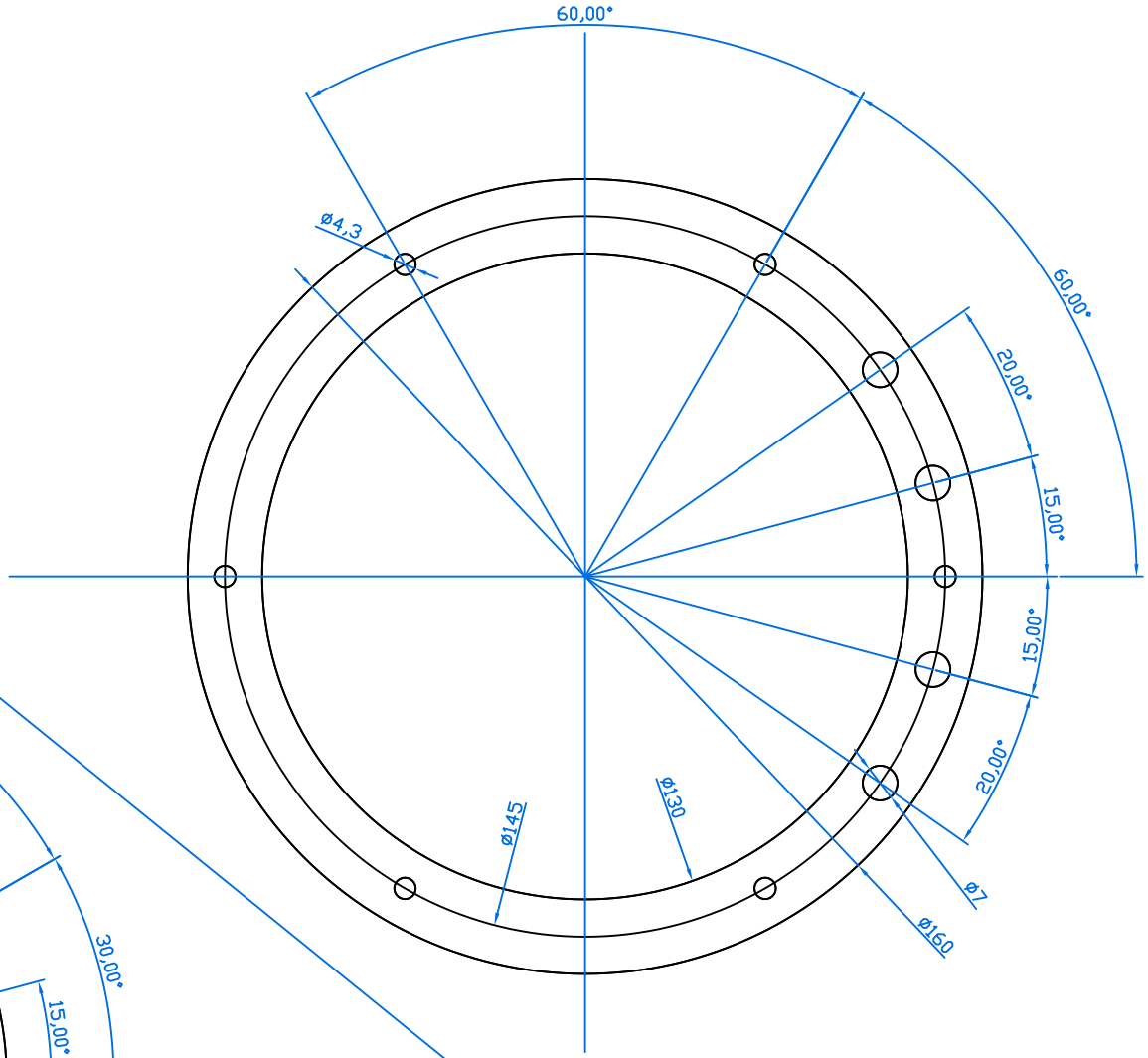

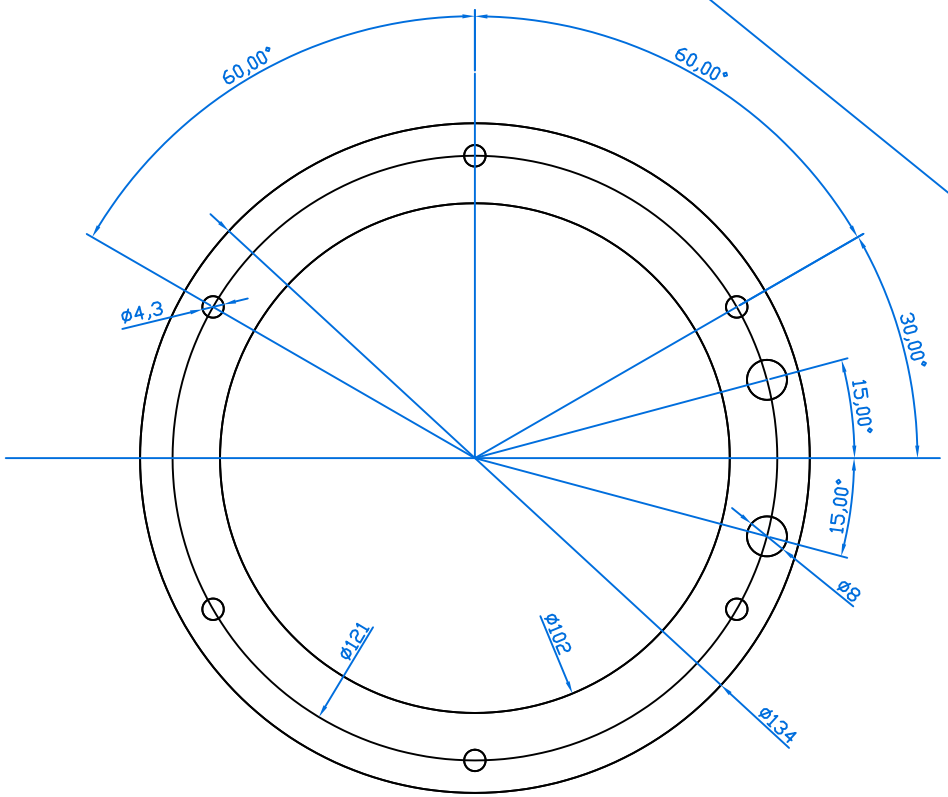

		22/03/07	P.T.	
issue	changes	date	author	approval

material	surface roughness	
drawing nr	surface treatment	general tolerance
project AMICA	name AMICA FOR AMS-02 BAFFLE 241.001	
CENTER FOR ADVANCED RESEARCH IN SPACE OPTICS	size / scale	sheet 2/5

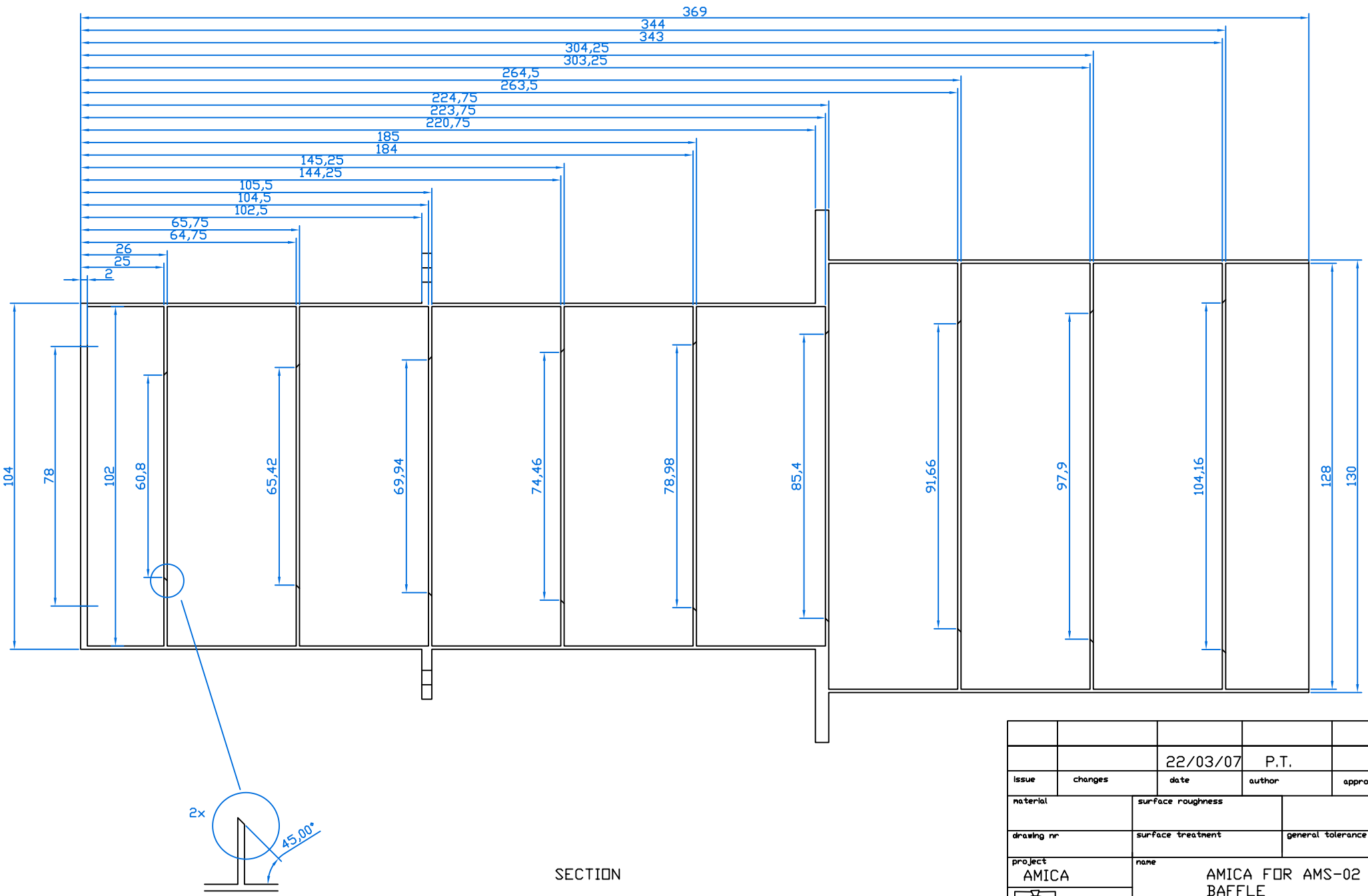

SECTION

		22/03/07	P.T.	
issue	changes	date	author	approval

material	surface roughness	
drawing nr	surface treatment	general tolerance
project: AMICA	name: AMICA FOR AMS-02 BAFFLE 241.001	
CENTER FOR ADVANCED RESEARCH IN SPACE OPTICS	size	scale / sheet 3/5

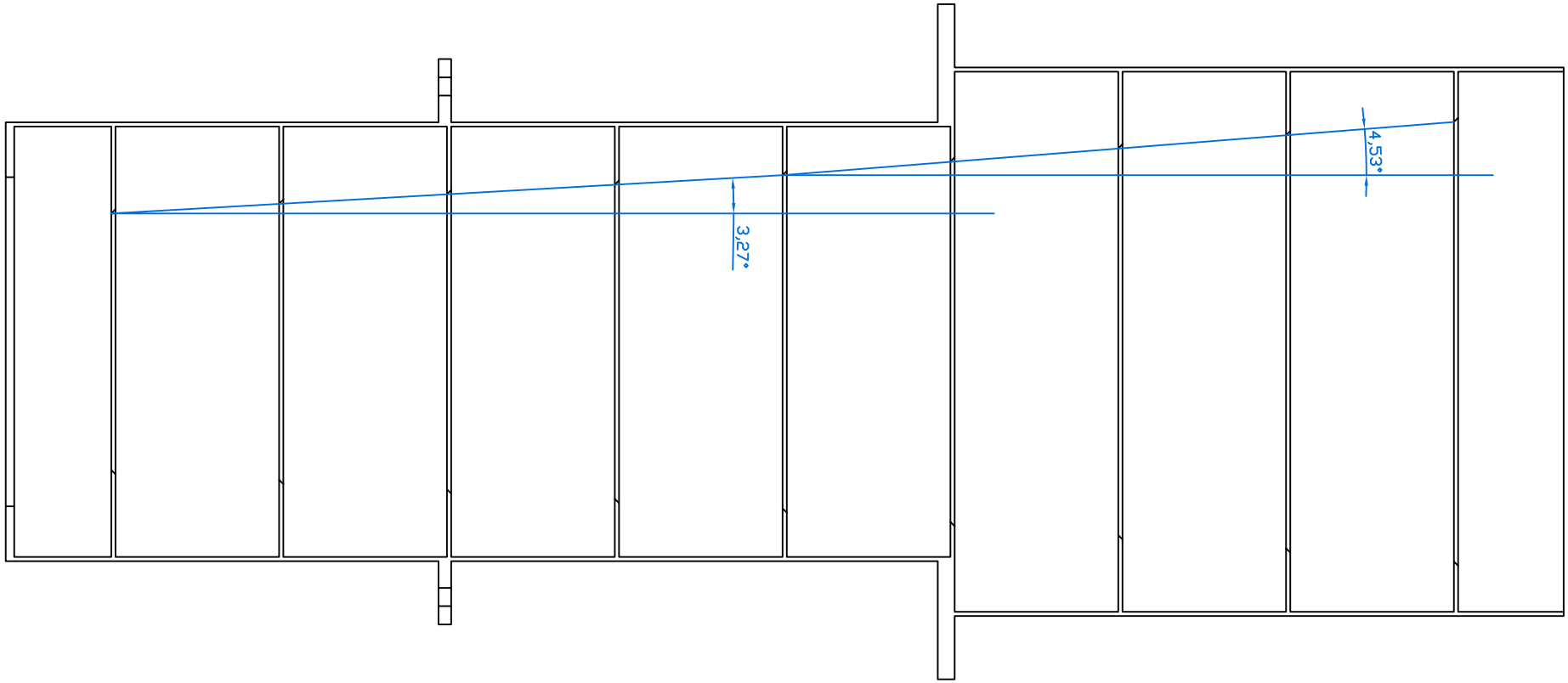

FIELD OF VIEWS

		22/03/07	P.T.	
issue	changes	date	author	approval

material	surface roughness	
drawing nr	surface treatment	general tolerance
project: AMICA	name: AMICA FOR AMS-02 BAFFLE 241.001	
CENTER FOR ADVANCED RESEARCH IN SPACE OPTICS	size / scale	sheet: 4/5

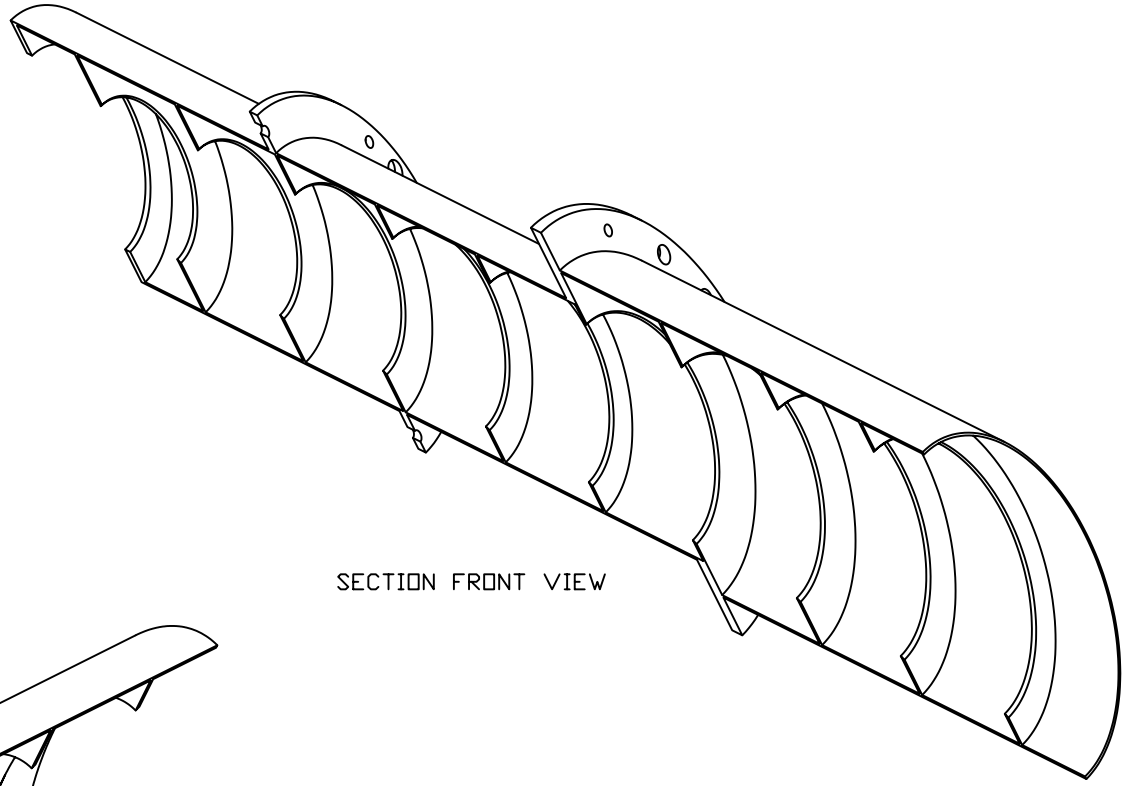

SECTION FRONT VIEW

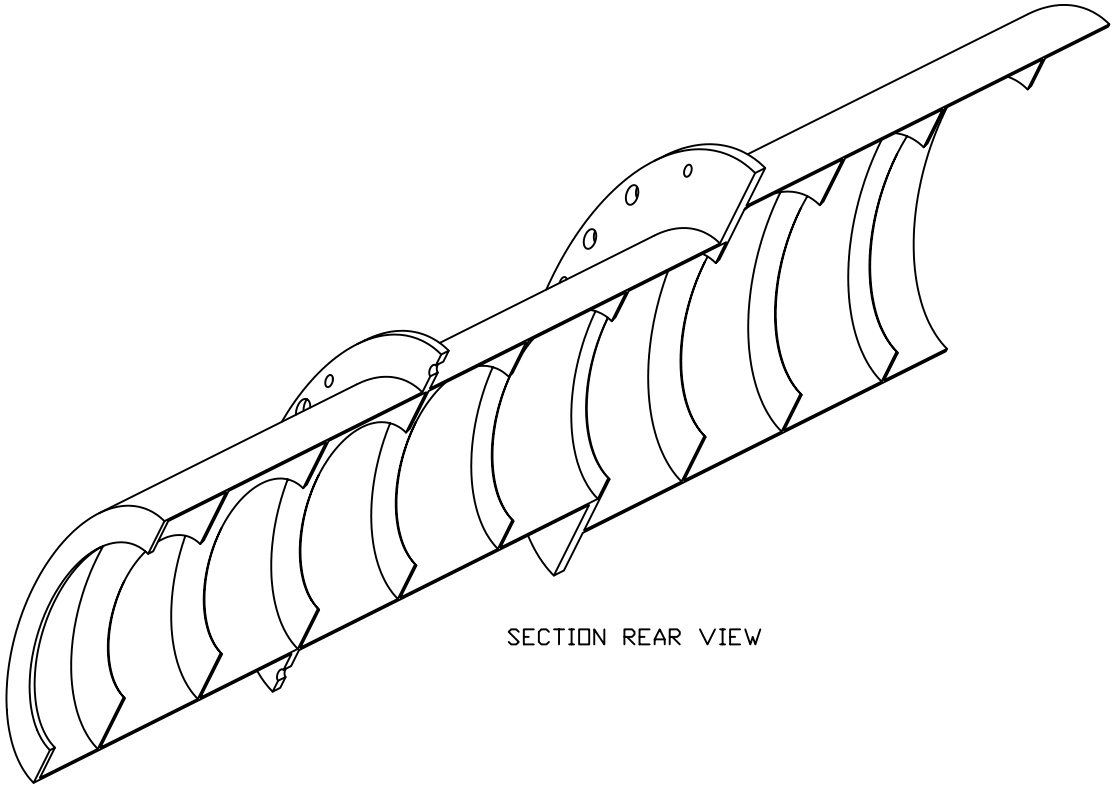

SECTION REAR VIEW

		22/03/07	P.T.	
issue	changes	date	author	approval
material		surface roughness		
drawing nr		surface treatment		general tolerance
project AMICA		name AMICA FOR AMS-02 BAFFLE 241.001		
CENTER FOR ADVANCED RESEARCH IN SPACE OPTICS		size	scale	sheet 5/5