ORIGINALE ARCHIVIO

CARLO GAVAZZI

CARLO GAVAZZI SPACE SpA

RICH SYSTEM

Tipo Doc.: *Doc.Type:*	PROCEDURE			N° DRD: *DRD N°:*	NA
N° Doc.: *Doc. N°:*	**RICSYS-PR-CGS-008**	Ediz.: *Issue:* **3**	Data: *Date:* **31/08/2006**	Pagina *Page* **1**	Di *Of* **51**
Titolo : *Title :*	ECAL THERMAL TEST PROCEDURE				

	Nome & Funzione *Name & Function*	Firma *Signature*	Data *Date*
Preparato da: *Prepared by:*	Franzoso A. (DT/MT)		31/08/06
Approvato da: *Approved by:*	Molina M. (DT/MT) Cremonesi L. (PA/SF) Cinquepalmi C (PA/CC)		31/8/06 31.08.06 31 08 06
Applicazione autorizzata da: *Application authorized by:*	Olivier M. (DT/MT)		31/08/06

Customer / Higher Level Contractor

Accettato da: *Accepted by:*			
Approvato da: *Approved by:*			

LISTA DI DISTRIBUZIONE *DISTRIBUTION LIST*	N	A	I
Interna / *Internal*			
Esterna / *External*			
Cervelli F. (INFN-Pisa)	1		x
Laurenti G. (INFN-Bologna)	1		x

N=Numero di copie A=Applicazione I=Informazione
N=Number of copy A=Application I=Information

Gestione documenti: *Data Management:* Firma / *Signature* 31/8/06 Data / *Date*

File: RICSYS-PR-CGS-008_is3 doc

Questo documento contiene informazioni di proprietà di CARLO GAVAZZI SPACE SpA: Tutti i diritti sono riservati
All information contained in this document are property of CARLO GAVAZZI SPACE SpA. All right reserved.

REGISTRAZIONE DELLE MODIFICHE / *CHANGE RECORD*

EDIZIONE *ISSUE*	DATA *DATE*	AUTORIZZAZIONE *CHANGE AUTHORITY*	OGGETTO DELLA MODIFICA E SEZIONI AFFETTE *REASON FOR CHANGE AND AFFECTED SECTIONS*
1	11/02/2004	First issue	
2	22/05/2006	ASI-RTE-TRR-RID-01-RC	Section 1 : The scope of the document is better defined Section 2.1 and 2.2 : Applicable and Reference documents updated Section 5 : External Facility has been defined Section 6 : TBCs and TBDs removed. Section 6.1.2 : MLI parts provision has been clarified Section 10 : Test success criteria clarified Section 12 : Step data sheets corrected Section 9 : Step profile aligned with temperature level table ANNEX A Facility description
3	31/08/2006	RICSYS-MI-CGS-013 TRR minute of meeting	Section 1 : The scope of the document is updated according to the test article configuration Section 2.2 : Reference documents updated Section 4: test article description updated and extended Section 6: test configuration updated according to absence of Dallas Temperature sensors Section 7: test instrumentation updated Section 9: Test profile updated, considering the new TRP location and sensors; heaters test added. Test temperature levels updated Section 12: step by step procedure aligned to the new configuration.

Questo documento contiene informazioni di proprietà di CARLO GAVAZZI SPACE SpA. Tutti i diritti sono riservati.
All information contained in this document are property of CARLO GAVAZZI SPACE SpA. All right reserved.

LISTA DELLE PAGINE VALIDE / *LIST OF VALID PAGES*

PAGINA *PAGE*	EDIZIONE *ISSUE*	PAGINA *PAGE*	EDIZIONE *ISSUE*	PAGINA *PAGE*	EDIZIONE *ISSUE*	PAGINA *PAGE*	EDIZIONE *ISSUE*	PAGINA *PAGE*	EDIZIONE *ISSUE*
1 - 51	3								
Annex A	3								
A1-A28									

Questo documento contiene informazioni di proprietà di CARLO GAVAZZI SPACE SpA. Tutti i diritti sono riservati
All information contained in this document are property of CARLO GAVAZZI SPACE SpA. All right reserved.

TABLE OF CONTENT

1. SCOPE 6

2. DOCUMENTS 6

2.1 APPLICABLE DOCUMENTS 6
2.2 REFERENCE DOCUMENTS 6
2.3 ACRONYMS 7

3. PARTICIPANTS REQUIRED 8

3.1 GENERAL 8
3.2 RESPONSIBILITY 8
3.3 QA WITNESS OF TEST AND SIGN-OFF 8
3.4 NON CONFORMANCE AND FAILURES 8
3.5 CALIBRATION REQUIREMENTS 8

4. TEST ARTICLE 9

4.1 PMT POWER AND MASS DUMMIES 10
4.2 EIB POWER AND MASS DUMMIES 12
4.3 HEATERS AND THERMOSTATS CONCEPT 14

5. FACILITY 17

6. TEST CONFIGURATION 17

6.1 INTERFACES 18
6.1.1 CONDUCTIVE INTERFACE SIMULATION 18
6.1.2 RADIATIVE I/F 19
6.2 TEMPERATURE REFERENCE POINTS 20
6.3 TEST SENSORS LOCATION 21
6.4 FUNCTIONAL TESTS 33

7. INSTRUMENTATION AND TEST EQUIPMENT 34

8. TEST CONDITION 36

8.1 MEASUREMENTS ACCURACY 36

9. TEST PROFILE 37

9.1 TEMPERATURE LEVELS 37
9.2 TEMPERATURE CYCLES 39
9.3 STABILIZATION CRITERIA 39

10. TEST SUCCESS CRITERIA 40

11. TEST PROCEDURE VARIATION SHEET 40

12. TEST DATA SHEETS 42

12.1 DATA SHEETS FILLING UP 42

ANNEX A TEST FACILITY DESCRIPTION

Questo documento contiene informazioni di proprietà di CARLO GAVAZZI SPACE SpA. Tutti i diritti sono riservati.
All information contained in this document are property of CARLO GAVAZZI SPACE SpA. All right reserved.

LIST OF TABLES

Table 4.1 Flight and Test power loads; comparison of FM PMT power and test dummy heaters 12
Table 4.2 Flight and Test power loads; comparison of FM EIB power and test EIB power dummies 12
Table 6.1 ECAL thermal sensors position 23
Table 7.1 INSTRUMENT LIST 35
Table 9.1 Temperatures for ECAL TRPs 37

LIST OF FIGURES

Figure 4-1 Location of PMT dummy heaters, flight-like PMT and PMT mass dummies on the 4 panels of ECAL QM 11
Figure 4-2 Location of the EIB power dummies on the L-Beams to be bolted to the radiators 13
Figure 4-3 Radiator heaters main line electrical scheme 15
Figure 4-4 Radiator heaters redundant line electrical scheme 16
Figure 6-1 Test configuration and sharing of responsibilities 17
Figure 6-2 Test set up. Base-plate is intended for understanding purpose only of the set-up. Mounting plate of the Teflon feet could be the rail system the TV chamber is equipped 18
Figure 6-3 ECAL MLI coverage for thermal vacuum test 19
Figure 6-4 ECAL radiator (yellow) and corner brackets are visible 19
Figure 6-5 TRPs position on PMT End-Cap 20
Figure 6-6 TV Chamber minimal thermal sensors layout 23
Figure 6-7 Sensors positions on the 4 sides of the ECAL QM 26
Figure 6-8 Thermal sensor position on the upper and lower honeycomb panels 27
Figure 6-9 Thermal sensors position on ram radiator 27
Figure 6-10 Thermal sensors position on other 3 radiators 28
Figure 6-11 Thermal sensors position on upper side of back panel of ram radiator 28
Figure 6-12 Thermal sensors position on upper side of the other 3 back panels 29
Figure 6-13 Thermal sensors position on lower side of ram back pane 29
Figure 6-14 Thermal sensors position on lower side of the other 3 back panels 30
Figure 6-15 Thermal sensors position on ram/starboard corner bracket 30
Figure 6-16 Thermal sensors position on ram/port corner bracket 31
Figure 6-17 Thermal sensors position wake/port corner bracket 31
Figure 6-18 Thermal sensors position wake/starboard corner bracket 32
Figure 9-1 Definition of the temperature gradient DT 37
Figure 9-2 Thermal Vacuum Cycling and Thermal Balance Test profile. Stabilization criteria are provided in the step-by-step procedure 39

Questo documento contiene informazioni di proprietà di CARLO GAVAZZI SPACE SpA. Tutti i diritti sono riservati
All information contained in this document are property of CARLO GAVAZZI SPACE SpA. All right reserved.

1. SCOPE

This document describes the procedure applicable to the Thermal Vacuum Cycling (TVC) and Thermal Balance tests (TB) of the Electro-magnetic-Calorimeter detector (ECAL), which is part of Alpha Magnetic Spectrometer (AMS02) qualification unit, to be performed during the qualification campaign in accordance with AD[2].

The test article shall be composed of the FM radiators (equipped with FM thermal hardware, i.e. heaters, tape and thermal filler), and the QM detector. (See also [RD#3])

The main objectives of the test are:

- To test the internal thermal design of ECAL (conductive and radiative links of the QM, but representative of the flight unit) in hot and cold conditions
- To test radiators sizing and suitability for the application
- To define the minimum environmental temperature that the non operative ECAL can experience
- To validate the thermal mathematical models (TMM and GMM)

In order to get these target the test consists of:

- Four cycles in vacuum chamber, the fourth cycle plateau will be extended in time in order to allow the TB-stabilization criteria verification in order to perform the TMM/GMM correlation.

The thermal test results (i.e. temperatures) shall be collected in a dedicated Test Report. The test report shall not include detailed functional test results.

2. DOCUMENTS

2.1 APPLICABLE DOCUMENTS

AD#	Doc Number	Issue	Date	Rev	Title
1	AMS02-TN-004-CGS	5	02/03/2005	n/a	Preliminary thermal requirement for internal AMS02 interfaces
2	I/020/03/0	n/a	14/05/2003	n/a	Allegato tecnico-manageriale CGS al contratto AMS02/RICH/TOF/ECAL

2.2 REFERENCE DOCUMENTS

RD#	Doc Number	Issue	Date	Rev	Title
1	GD-PL-CGS-001	3	17/03/99	n/a	Product Assurance & RAMS Plan
2	ECSS-E-10-03A	n/a	15/02/02	n/a	Space Engineering - Testing
3	RICSYS-MI-CGS-013	n/a	13/06/2006	n/a	Minute of meeting: Definition of the ECAL QM configuration, responsibility and schedule
4	RICSYS-MI-CGS-016	n/a	01/08/2006	n/a	Minute of meeting: Progress meeting on ECAL QM
5	RICSYS-MI-CGS-006	n/a	01/12/2004	n/a	Minute of meeting: Thermal analysis and design progress report and technical interchange meeting

Questo documento contiene informazioni di proprietà di CARLO GAVAZZI SPACE SpA Tutti i diritti sono riservati
All information contained in this document are property of CARLO GAVAZZI SPACE SpA. All right reserved.

2.3 ACRONYMS

AD	Applicable Document
AMS	Alpha Magnetic Spectrometer
CGS	Carlo Gavazzi Space
CI	Configuration Item
ECAL	Electromagnetic Calorimeter
EGSE	Electronic Ground Segment Equipment
FM	Flight Model
GMM	Geometrical Matematical Model
ICD	Interface Control Document
MLI	Multi Layer Insulator
NA	Not Applicable
NCR	Non Conformance Report
P/N	Part Number
PA	Product Assurance
PFM	Protoflight Qualification Model
PMT	Photo Multiplier Tube
PVS	Procedure Variation Sheet
QA	Quality Assurance
QM	Qualification Model
RD	Reference Document
RICH	Ring Image Cherencov Counter
S/N	Serial Number
TBC	To Be Confirmed
TBD	To Be Defined
TBW	To Be Written
TMM	Thermal Matematical Model
TRP	Temperature Reference Point
TVC	Thermal Vacuum Cycling Test
USS	Unique Support Structure
UUT	Unit Under test

Questo documento contiene informazioni di proprietà di CARLO GAVAZZI SPACE SpA Tutti i diritti sono riservati.
All information contained in this document are property of CARLO GAVAZZI SPACE SpA. All right reserved.

3. PARTICIPANTS REQUIRED

3.1 GENERAL

All test will be performed under QA surveillance in accordance with, and following detailed procedure of applicable Product Assurance (PA) Plan. Start of the Test shall be notified to Prime Contractor and/or Customer as applicable

3.2 RESPONSIBILITY

The technical responsibility for testing and test results reporting is up to the **Technical Directorate of CGS.**
The test shall be run by skilled personnel under the surveillance of the CGS Technical Directorate which will provide the test conductor.
Continuous witness of the test will be ensured by means of shifts: CGS Thermal Department will be providing a continuous presence when running the step-by-step procedure described in the paragraph 12 1 .

CGS QA (or its delegate) is responsible for ensuring that all the agreed procedures are carefully observed, that test equipment and instrumentation used during testing is calibrated and within validity date; that the test data sheets are recorded in the Test Report and signed by the operators and QA (or its delegate) witnesses, that all non-conforming condition and test results are properly documented and notified to the Prime Contractor, and that all requirements of applicable PA Plan, specification and Statement of Work pertaining to the tests, are fully satisfied.

INFN-Pisa, being responsible of the design (with exception of the thermal control system) of the ECAL detector, will provide personnel to supply power to the ECAL detector (i.e. switching ON/OFF the instrument to provide a suitable heat source).

Facility personnel, based on test conductor input, shall operate the TV-Chamber in order to guarantee the test temperature level requirement are met.

3.3 QA WITNESS OF TEST AND SIGN-OFF

QA inspector, or its delegate, shall witness the tests described in this procedure in accordance to the requirements specified in the applicable PA Plans.

3.4 NON CONFORMANCE AND FAILURES

Any malfunction/defect which occurs during the test will be processed along the Non Conformance Procedure described in the applicable PA Plans

3.5 CALIBRATION REQUIREMENTS

All instruments used for testing shall be calibrated.

Evidence of certification shall be provided by a label attached to the instruments itself, showing the calibration date, the expiring date and the signature of the operator.

All the calibration certificates will be incorporated by the external facility, upon request, in the facility test report

Questo documento contiene informazioni di proprietà di CARLO GAVAZZI SPACE SpA Tutti i diritti sono riservati.
All information contained in this document are property of CARLO GAVAZZI SPACE SpA. All right reserved.

4. TEST ARTICLE

The test article consists of ECAL QM, equipped with FM radiators
According to RD#3, the test article is configured as follows:

- ECAL QM, composed of the following QM components: pancake, lateral panels, back panels, upper and lower honeycomb panels, mounting brackets, spring foam
- 9 flight-like PMT assemblies (PMT, bleeder circuit, light guide, End Cap, thermal filler), powered, but without data acquisition
- 305 PMT assemblies mass dummies
- 305 QM End Caps
- 32 PMT dummy heaters, to represent the nominal PMT power dissipation.
- 44 EIB dummy heaters, to represent the nominal EIB power dissipation
- 10 L-beams supports for the EIB dummy heaters mounting. These L-beams shall be bolted to the FM radiators
- 4 FM radiators, equipped with FM heaters, FM thermal filler and FM silver Teflon tape.
- 3 thermostats, FM-like but not flight hardware, to control the radiator heaters.
- Test MLI on the upper and lower honeycomb panels of the ECAL QM.

The test article shall be tested according to this procedure with the required procedure variation sheets.

The P/N of the test article(s) to be tested shall be recorded before starting the test on the step by step procedure sheets under "UNIT UNDER TEST" (UUT) table cell.

In the following sections some further information on the mass and power dummies is given, as well as the heater/thermostats wiring concept.

Questo documento contiene informazioni di proprietà di CARLO GAVAZZI SPACE SpA. Tutti i diritti sono riservati.
All information contained in this document are property of CARLO GAVAZZI SPACE SpA. All right reserved.

4.1 PMT POWER AND MASS DUMMIES

PMT power and mass dummies are arranged as follows in the four sides of the ECAL QM; in the following sketches, the lateral sides PMT arrays are represented as 4x18 and 5x18 grids, each cell representing a PMT location. The two 4x18 sides are identical, while the difference between the 5x18 sides lies on the fact that on one side (the ram one) the 9 flight-like PMT are mounted.

Questo documento contiene informazioni di proprietà di CARLO GAVAZZI SPACE SpA. Tutti i diritti sono riservati.
All information contained in this document are property of CARLO GAVAZZI SPACE SpA. All right reserved.

RAM PANEL, 5x18

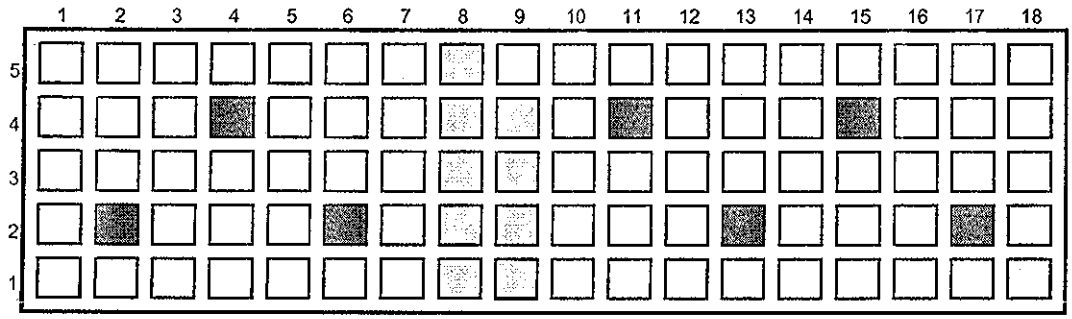

WAKE PANEL, 5x18

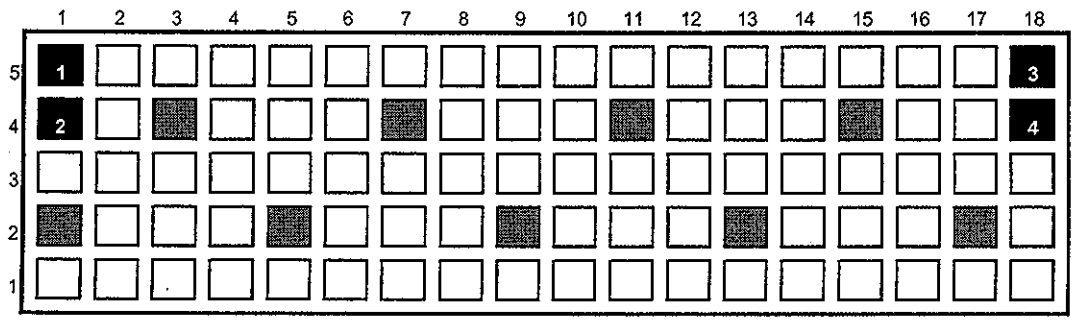

PORT PANEL, 4x18

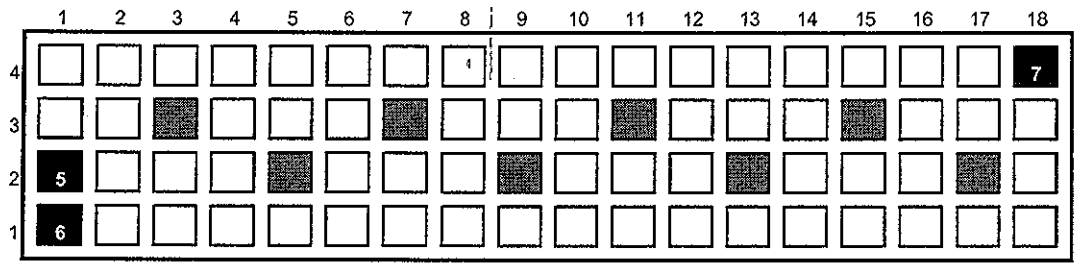

STARBOARD PANEL, 4x18

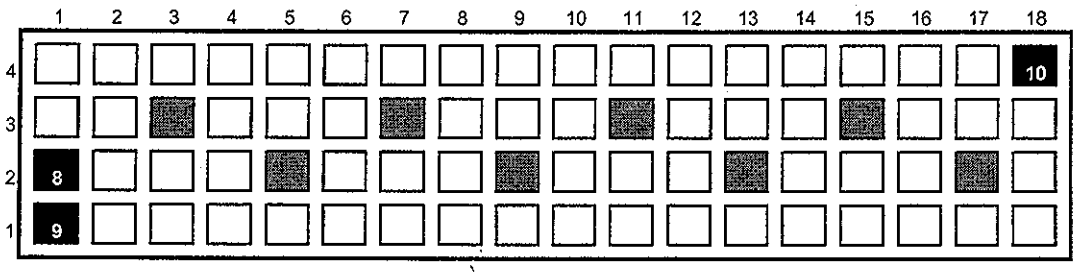

PMT dummy heater

Flight like PMT

n missing mass dummy

Figure 4-1 Location of PMT dummy heaters, flight-like PMT and PMT mass dummies on the 4 panels of ECAL QM

Questo documento contiene informazioni di proprietà di CARLO GAVAZZI SPACE SpA. Tutti i diritti sono riservati
All information contained in this document are property of CARLO GAVAZZI SPACE SpA. All right reserved.

305 out of 315 mass dummies are present everywhere but in the black cells.
The Dummy heaters are electrical heaters, aluminum case, connected in series per each ECAL QM side.
The value of the resistances have been chosen in order to reproduce the heat of the corresponding PMTs on each side.
The dummy heaters chains shall be fed at 24V. At this nominal voltage, the difference of the dummies power with respect to the target power of the PMT is listed in the following table:

PANEL	Target power [W]	Resistors number	Resistor nominal value [Ohm]	Heaters power [W]	Relative difference [%]
STARBOARD (4x18)	10.8	8	6.8	10.6	-2.0
PORT (4x18)	10.8	8	6.8	10.6	-2.0
WAKE (5x18)	13.5	9	4.7	13.6	0.9
RAM (5x18, with PMT)	12.2	7	6.8	12.1	-0.8

Table 4.1 Flight and Test power loads; comparison of FM PMT power and test dummy heaters

4.2 EIB POWER AND MASS DUMMIES

The ECAL FM has 36 EIB electric boards, 8 on the 4 rows sides (along X, at port and starboard directions), and 10 on the 5 rows sides (along Y, in the ram and wake directions).

The power of the EIB is different from board to board. It has been decided to reproduce the average power dissipation on each side of the ECAL by gluing the EIB power dummies on dedicated L-beams, to be bolted on the radiators. The total power on each side has been reproduced, while it has been considered not important to reproduce the exact power dissipation of each single EIB board.

The positioning of the resistors is represented in the figure at the following page; the resistors location is indicated by the "1" in the cells.

44 resistors are present in total, each with a value of 12 Ohm; their nominal power is listed in the table below, and compared to the target power of the FM EIB:

PANEL	Target power [W]	Resistors number	Resistor nominal value [Ohm]	Heaters power [W]	Relative difference [%]
STARBOARD (4x18)	4.08	12	12	4	-2.0
PORT (4x18)	4.08	12	12	4	-2.0
WAKE (5x18)	4.80	10	12	4.8	0
RAM (5x18, with PMT)	4.80	10	12	4.8	0

Table 4.2 Flight and Test power loads; comparison of FM EIB power and test EIB power dummies

Questo documento contiene informazioni di proprietà di CARLO GAVAZZI SPACE SpA Tutti i diritti sono riservati
All information contained in this document are property of CARLO GAVAZZI SPACE SpA. All right reserved.

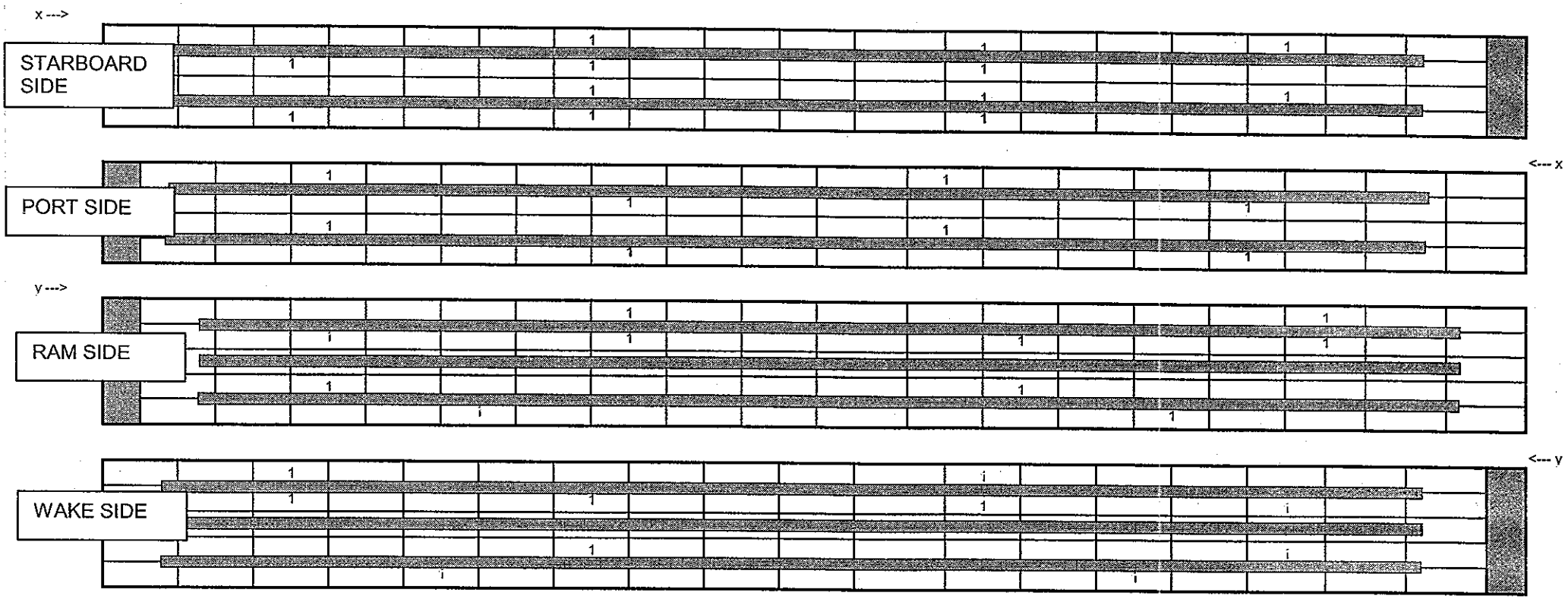

Power Supply: 24

L shape to attach EIB simulator

FM EIB configuration: 36 EIB's, 8 for each side with 4 rows (2 for support frame), 10 for each side with 5 rows (2,2,1)

Figure 4-2 Location of the EIB power dummies on the L-Beams to be bolted to the radiators

Questo documento contiene informazioni di proprietà di CARLO GAVAZZI SPACE SpA. Tutti i diritti sono riservati.
All information contained in this document are property of CARLO GAVAZZI SPACE SpA. All right reserved.

4.3 HEATERS AND THERMOSTATS CONCEPT

On each FM radiator, a set of patch heaters is installed. These heaters are double-sided, and have main and redundant power supply lines.

In the FM configuration, each line for each radiator shall be equipped with a thermostat, mounted on the corresponding ECAL side.

In the Test configuration, instead, 2 thermostats shall be included in the set up. One of them shall drive the main heaters line of the ram side of the ECAL, (5x18 side, with 9 flight-like PMT installed).

The second thermostat shall drive, in parallel, the main lines of the heaters on the other 3 sides.

The redundant lines of the heaters on all the 4 sides shall be driven with a manual switch outside the therm vacuum chamber

The wiring scheme is given below, for the main and redundant sections. Fore sake of clarity, the heater set of each radiator is represented by a single rectangle

Legenda:

: "mammoth", plastic, in air side

: electric cable

: Heaters assembly for a single radiator

T1 : Thermostat

: Electrical cables joint in vacuum, no use of "mammoth"

: Connectors to the chamber wall

– – – : Chamber wall; above the line: vacuum; below: air

Questo documento contiene informazioni di proprietà di CARLO GAVAZZI SPACE SpA. Tutti i diritti sono riservati.
All information contained in this document are property of CARLO GAVAZZI SPACE SpA. All right reserved.

MAIN LINE

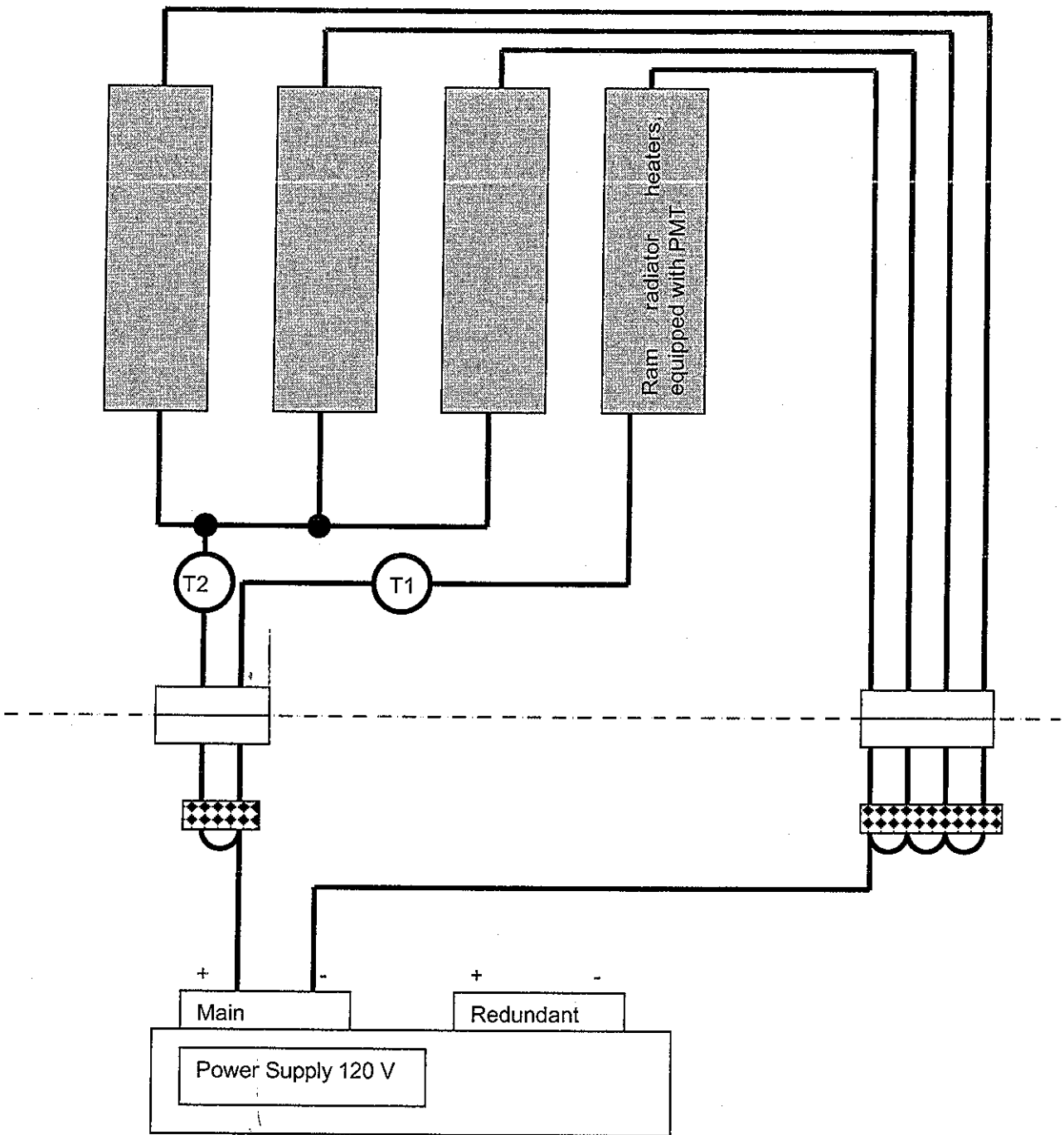

Figure 4-3 Radiator heaters main line electrical scheme

Questo documento contiene informazioni di proprietà di CARLO GAVAZZI SPACE SpA. Tutti i diritti sono riservati
All information contained in this document are property of CARLO GAVAZZI SPACE SpA. All right reserved.

REDUNDANT LINE

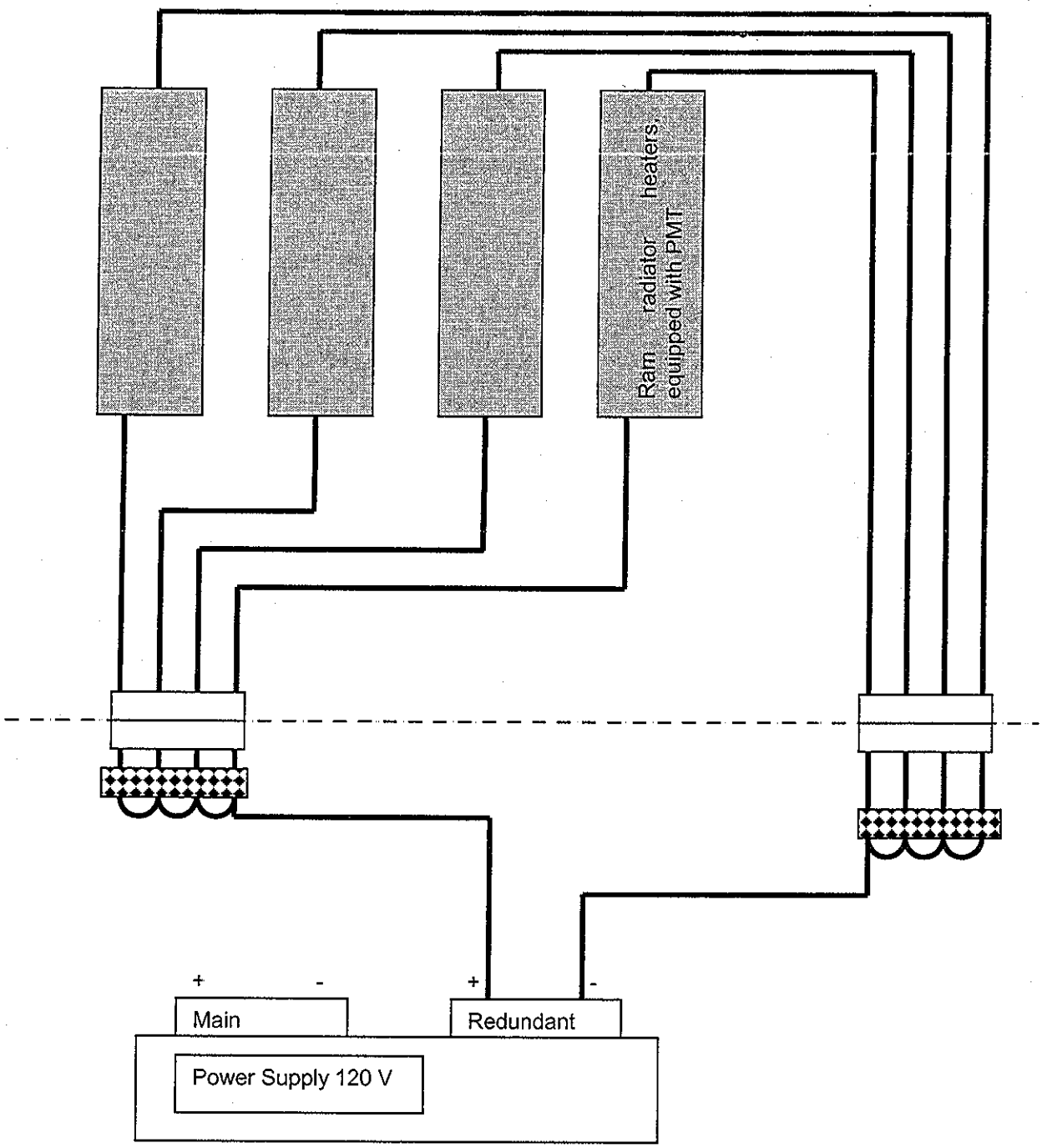

Figure 4-4 Radiator heaters redundant line electrical scheme

The redundant line of the heaters, which does not foresee any thermostat, can optionally be powered to increase the temperature change rate during transitions from cold to hot phases during the cycles.

Questo documento contiene informazioni di proprietà di CARLO GAVAZZI SPACE SpA. Tutti i diritti sono riservati.
All information contained in this document are property of CARLO GAVAZZI SPACE SpA. All right reserved.

5. FACILITY

The selected test Facility is Università di Perugia (Polo scientifico Didattico di Terni, Laboratorio SERMS), in Terni – Italy.
It is an external facility. See annex A for the details about the facility.

6. TEST CONFIGURATION

ECAL QM shall be provided by INFN-Pisa.

ECAL QM detector will be moved into a Thermal Vacuum Chamber (TVC) by the means of an appropriate crane and mounted on a dedicated support structure fixed to the chamber fixture.
In the next figure the test configuration is shown. In parenthesis the responsibility is indicated for each item to be provided for the test.

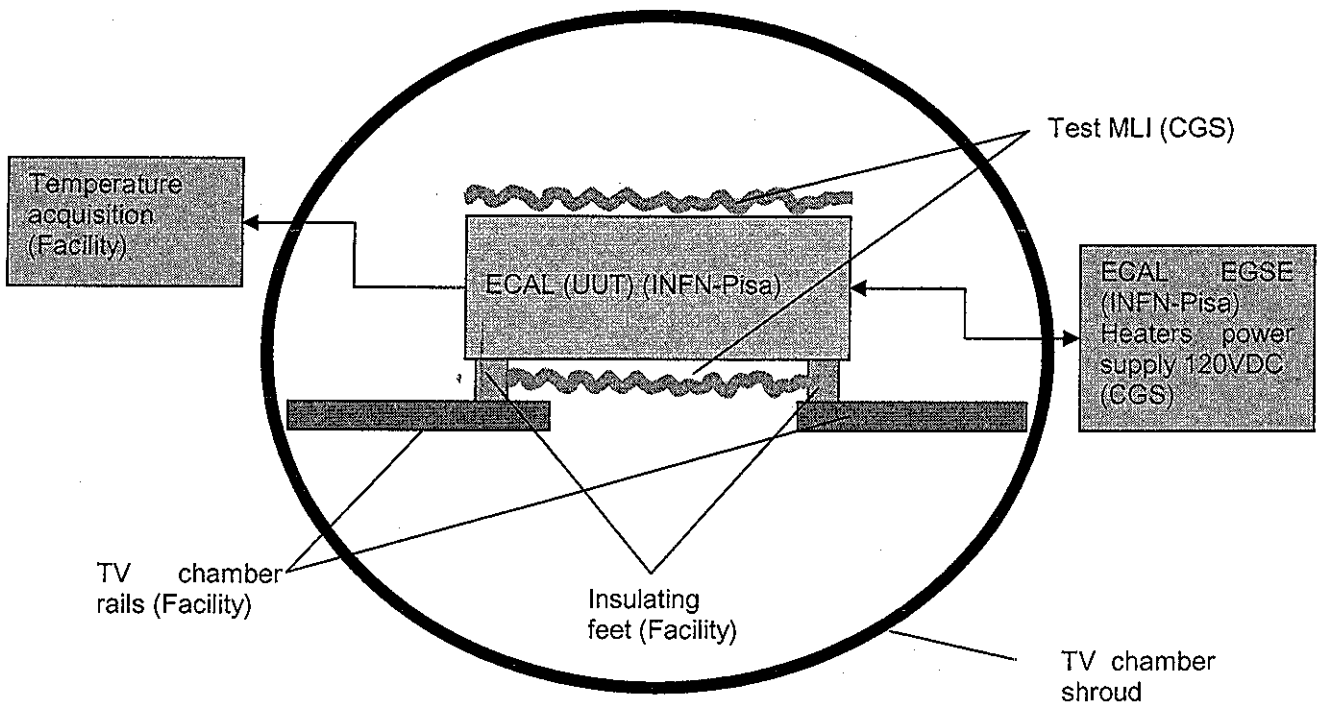

Figure 6-1 Test configuration and sharing of responsibilities

EGSE will be used to supply power to ECAL detector, by INFN-Pisa.
The ECAL shall be connected to the relevant Electronic Ground Segment Equipment (EGSE) and supplied at the nominal operating voltage by INFN as well.
ECAL switch-on and switch-off shall be performed by INFN-Pisa and under responsibility of INFN-Pisa
Functional test results are not to be used as a success criterion for the CGS thermal test.

The Facility will provide:

Questo documento contiene informazioni di proprietà di CARLO GAVAZZI SPACE SpA. Tutti i diritti sono riservati
All information contained in this document are property of CARLO GAVAZZI SPACE SpA. All right reserved.

- temperature sensors
- data acquisition and recording system

The TVC used shall be capable to set the shroud temperature in a adequate range. The fixture temperature will change passively with the shroud one.

6.1 INTERFACES

The external MLI coverage and radiator surfaces extensions, shall be representative of the flight configuration, unless otherwise specified.
The worst temperature conditions on the TRPs (Temperature Reference Points, defined in section 6.2), shall be reproduced by setting the chamber shroud temperature.

6.1.1 CONDUCTIVE INTERFACE SIMULATION

A dedicated support structure will be used and linked to the 4 attachment points at the corner brackets. This will be designed in order to minimize the heat exchange between ECAL brackets and the chamber structure.

Four Teflon cylindrical insulating supports with base dimensions of 50 x 100 mm, and height 25 mm, will insulate the mounting brackets from the test adaptor and the chamber rails.

The dimensions were chosen to ensure than less than 10% of the heat is transferred conductively through the corner brackets, therefore ensuring that the thermal control is achieved by radiative exchange through the radiators. This value is further reduced by the thermal resistance along the test adaptor. The adopted solution grants that the heat through conduction is lower than 6% in the cold cases, and lower than 4% in hot cases.

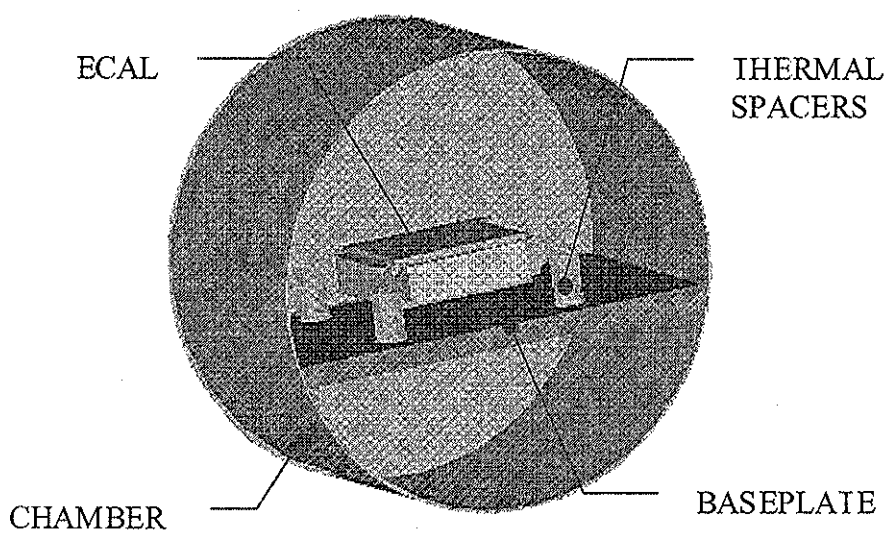

Figure 6-2 Test set up. Base-plate is intended for understanding purpose only of the set-up. Mounting plate of the Teflon feet could be the rail system the TV chamber is equipped.

Questo documento contiene informazioni di proprietà di CARLO GAVAZZI SPACE SpA. Tutti i diritti sono riservati
All information contained in this document are property of CARLO GAVAZZI SPACE SpA. All right reserved.

6.1.2 RADIATIVE I/F

The ECAL QM will be equipped with Test MLI blankets covering both top and bottom honeycomb panels. These MLI blankets are type Coolcat (by Sheldal). The blanket is composed of 10 layers 6µm Polyester, double side aluminized at 400 Angstrom, perforated, with 10 layers interleaving spacer material.

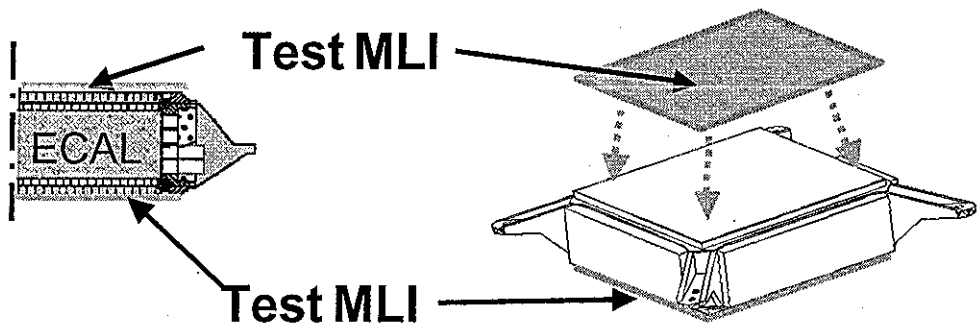

Figure 6-3 ECAL MLI coverage for thermal vacuum test

CGS shall fix MLI on ECAL structure before test. Fixation points shall be located on the structure.

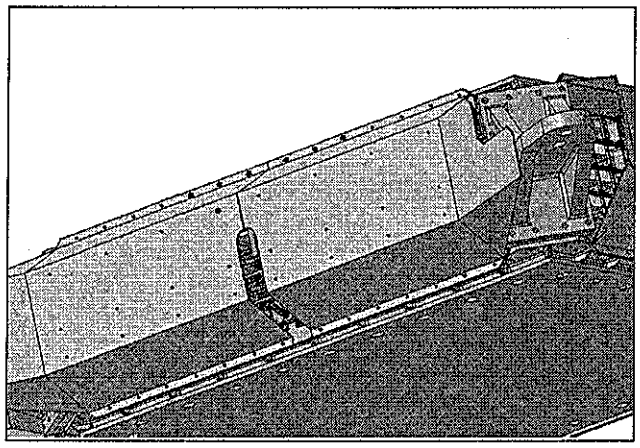

Figure 6-4 ECAL radiator (yellow) and corner brackets are visible

There are four radiators, one for each side of the ECAL. They shall be in view with the shroud which is black painted and whose temperature shall be controlled.

The radiative interface through radiators is intended to be the main path for heat exchange between the UUT and the thermo-vacuum chamber.

Questo documento contiene informazioni di proprietà di CARLO GAVAZZI SPACE SpA Tutti i diritti sono riservati.
All information contained in this document are property of CARLO GAVAZZI SPACE SpA. All right reserved.

6.2 TEMPERATURE REFERENCE POINTS

v set (2 flight like PMT) as the reference temperatures for the hot cases, while the second set (2 dummies at the corners) should result at the coldest locations, whose temperature shall characterize the cold test phases

The exact location is shown in the next section.

In the following, all the mentioned temperatures will be referred to these points.

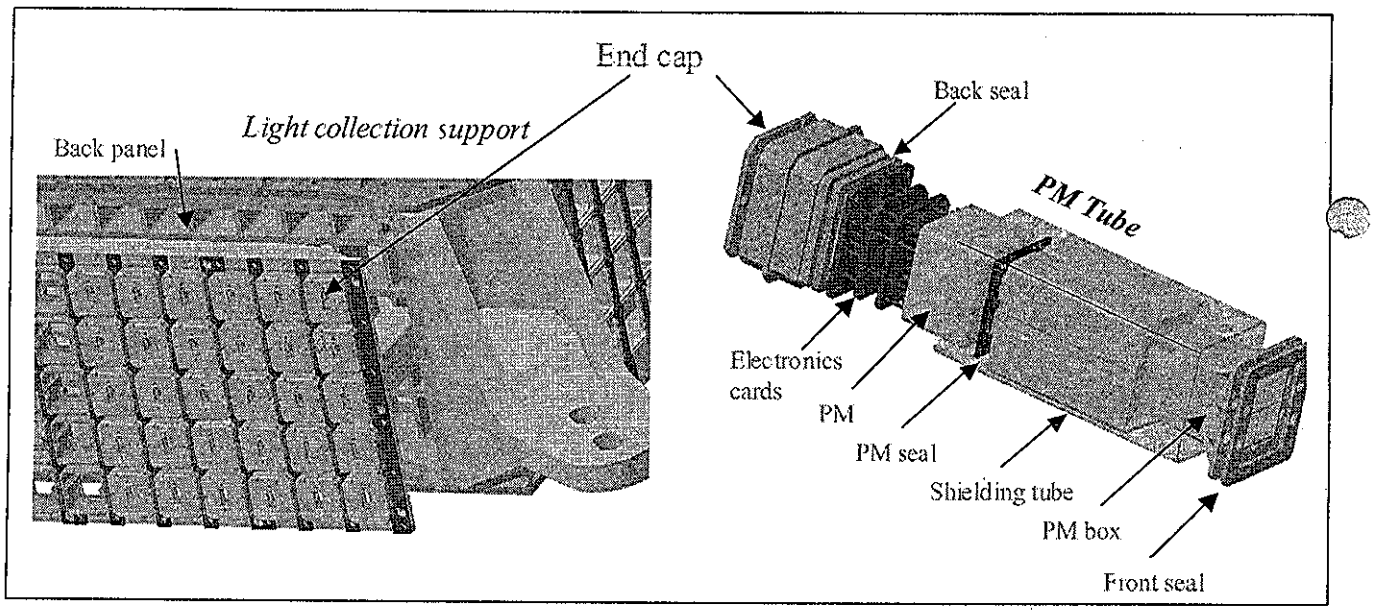

Figure 6-5 TRPs position on PMT End-Cap

Questo documento contiene informazioni di proprietà di CARLO GAVAZZI SPACE SpA Tutti i diritti sono riservati.
All information contained in this document are property of CARLO GAVAZZI SPACE SpA. All right reserved.

6.3 TEST SENSORS LOCATION

64 sensors will be placed on ECAL unit and their positions are described in Table 6.1 and can be seen from Figure 6-7 to Figure 6-18. Since the ECAL TVC test configuration presents many symmetries, (e g. the ECAL geometry, Power distribution, Chamber temperature distribution) the number of thermal sensors needed for temperature monitoring and for subsequent test results correlation has been reduced. There will be detailed monitoring only on one side of the ECAL equipment, namely ram side (5x18 array, equipped with the 9 flight-like PMT).
On the other three sides a reduced number of temperature sensors shall be implemented.

The TRP are included in the set of 64 temperature sensors, and are 4 in total.

In Table 6.1, the TRP are highlighted in yellow. All the TRPs are visible in Figure 6-7.

In addition to the 64 sensors, 6 other channels shall be monitored to measure the temperatures of the chamber. Installation, monitoring and acquisition of these sensors shall be performed under SERMS responsibility. These sensors are labeled with letters form **A** to **F**.

The following table lists all the thermal sensors that shall be used; the Channel ID column will be filled after sensor installation on the UUT.

Location ID #	Position	Channel ID #
A	TV Chamber mounting plate / rails	
B	TV Chamber left wall	
C	TV Chamber top wall	
D	TV Chamber right wall	
E	TV Chamber rear wall	
F	TV Chamber front wall	
1.	Ram panel, on End Cap, row 5 column 1 (TRP)	
2.	Ram panel, on End Cap, row 5 column 18 (TRP)	
3.	Ram panel, on End Cap, row 1 column 1	
4.	Ram panel, on End Cap, row 1 column 18	
5.	Ram panel, on End Cap, row 3 column 3	
6.	Ram panel, on End Cap, row 3 column11	
7.	Ram panel, on End Cap, row 3 column 16	
8.	Ram panel, on End Cap, row 1 column 9	
9.	Ram panel, on End Cap, row 1 column 9 redundant	
10.	Ram panel, on End Cap, row 1 column 8	
11.	Ram panel, on End Cap, row 3 column 8 (TRP)	
12.	Ram panel, on End Cap, row 3 column 8 redundant	
13.	Ram panel, on End Cap, row 3 column 9 (TRP)	
14.	Ram panel, on End Cap, row 3 column 9 redundant	
15.	Ram panel, on End Cap, row 5 column 8	

Questo documento contiene informazioni di proprietà di CARLO GAVAZZI SPACE SpA. Tutti i diritti sono riservati
All information contained in this document are property of CARLO GAVAZZI SPACE SpA. All right reserved.

16.	Ram panel, on End Cap, row 5 column 8 redundant	
17.	Ram panel, on PMT body, row 3 column 9	
18.	Ram panel, on PMT body, row 5 column 8	
19.	Ram panel, on Back panel, below row 1 column 9	
20.	Ram panel, on Back panel, below row 3 column 8	
21.	Wake panel, on End Cap, row 3 column 5	
22.	Wake panel, on End Cap, row 3 column 14	
23.	Port panel, on End Cap, row 3 column 5	
24.	Port panel, on End Cap, row 1 column 15	
25.	Starboard panel, on End Cap, row 3 column 5	
26.	Starboard panel, on End Cap, row 2 column 10	
27.	Upper honeycomb panel, center	
28.	Upper honeycomb panel, ram-starboard corner	
29.	Lower honeycomb panel, center	
30.	Lower honeycomb panel, ram-starboard corner	
31.	Ram radiator, on starboard winglet	
32.	Ram radiator, on upper inclined radiator at starboard	
33.	Ram radiator, on lower inclined radiator at starboard	
34.	Ram radiator, on center of radiator at starboard	
35.	Ram radiator, on port winglet	
36.	Ram radiator, on upper inclined radiator at port	
37.	Ram radiator, on lower inclined radiator at port	
38.	Ram radiator, on center of radiator at port	
39.	Starboard radiator, on left central part	
40.	Starboard radiator, on right central part	
41.	Wake radiator, on left central part	
42.	Wake radiator, on right central part	
43.	Port radiator, on left central part	
44.	Port radiator, on right central part	
45.	Ram back panel, behind radiator mounting flange, upper side, at starboard	
46.	Ram back panel, behind radiator mounting flange, upper side, at center	
47.	Ram back panel, behind radiator mounting flange, upper side, at port	
48.	Port back panel, behind radiator mounting flange, upper side, at center	
49.	Port back panel, at extreme right (wake side), close to bracket	
50.	Starboard back panel, behind radiator mounting flange, upper side, at center	
51.	Ram back panel, behind radiator mounting flange, lower side, at starboard	

Questo documento contiene informazioni di proprietà di CARLO GAVAZZI SPACE SpA. Tutti i diritti sono riservati.
All information contained in this document are property of CARLO GAVAZZI SPACE SpA. All right reserved.

52.	Ram back panel, behind radiator mounting flange, lower side, at center	
53.	Ram back panel, behind radiator mounting flange, lower side, at port	
54.	Port back panel, behind radiator mounting flange, lower side, at center	
55.	Wake back panel, behind radiator mounting flange, lower side, at center	
56.	Starboard back panel, behind radiator mounting flange, lower side, at center	
57.	On tip of mounting bracket, ram-port corner	
58.	On tip of mounting bracket, ram-starboard corner	
59.	On center of mounting bracket, ram-port corner	
60.	On center of mounting bracket, ram-starboard corner	
61.	On ram back panel, at extreme right (port), close to mounting bracket	
62.	On ram back panel, at extreme left (starboard), close to mounting bracket	
63.	On tip of mounting bracket, wake-port corner	
64.	On tip of mounting bracket, wake-starboard corner	

Table 6.1 ECAL thermal sensors position

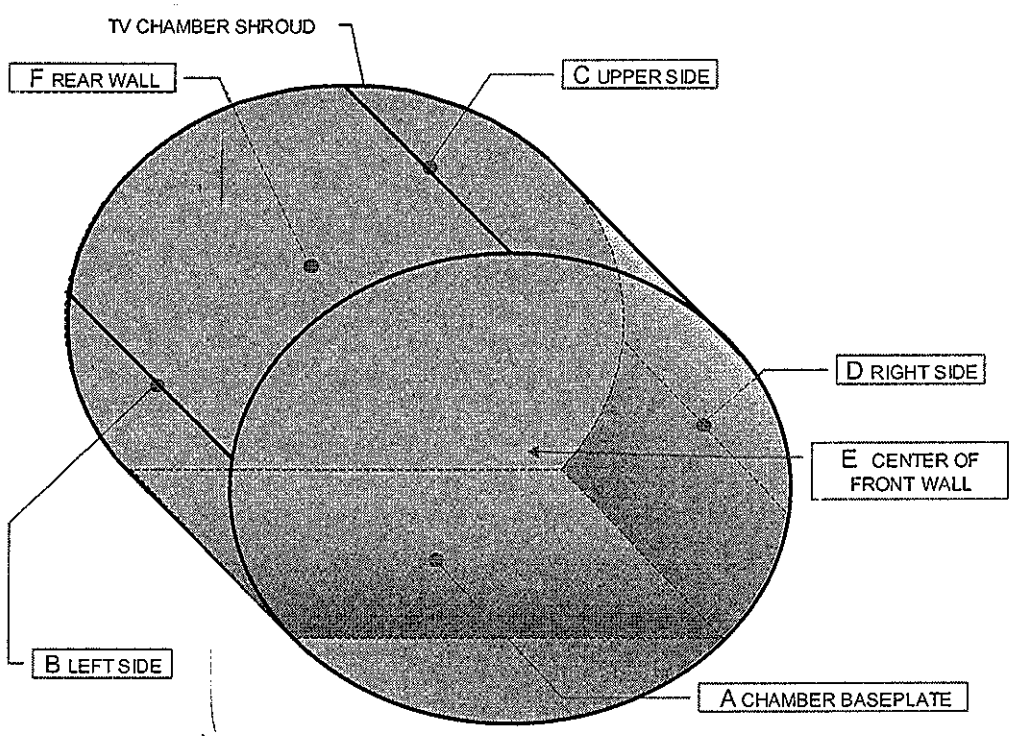

Figure 6-6 TV Chamber minimal thermal sensors layout

Questo documento contiene informazioni di proprietà di CARLO GAVAZZI SPACE SpA Tutti i diritti sono riservati.
All information contained in this document are property of CARLO GAVAZZI SPACE SpA. All right reserved.

RAM PANEL

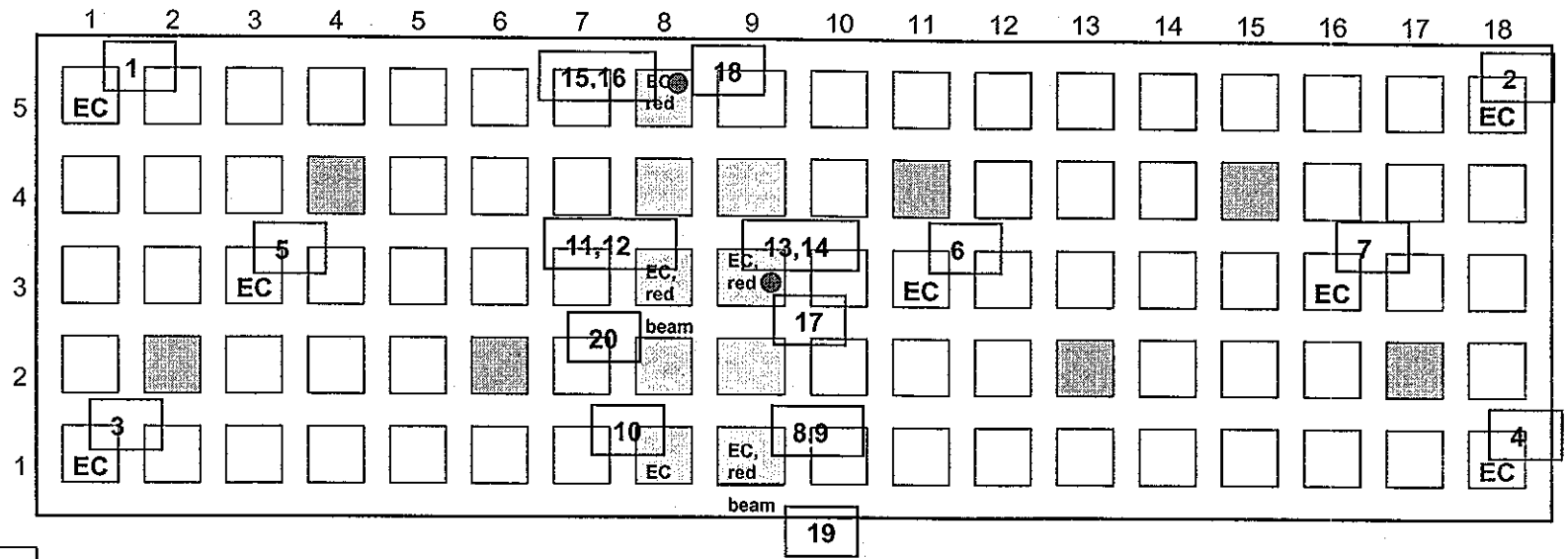

EC	sensors on dummy PMT end caps
EC, red	sensors on PMT end caps (4 redunded, one single)
beam	sensors on back panel beams
●	sensors on PMT internal body

Questo documento contiene informazioni di proprietà di CARLO GAVAZZI SPACE SpA. Tutti i diritti sono riservati.
All information contained in this document are property of CARLO GAVAZZI SPACE SpA. All right reserved.

WAKE PANEL

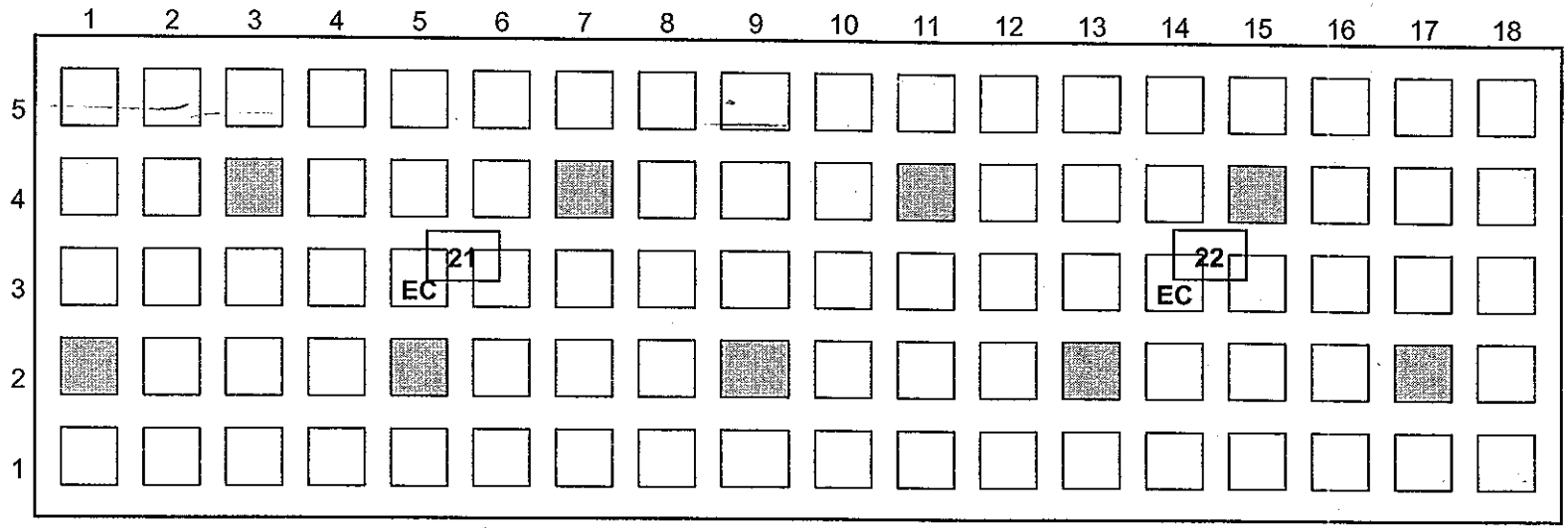

Questo documento contiene informazioni di proprietà di CARLO GAVAZZI SPACE SpA. Tutti i diritti sono riservati.
All information contained in this document are property of CARLO GAVAZZI SPACE SpA. All right reserved.

PORT PANEL

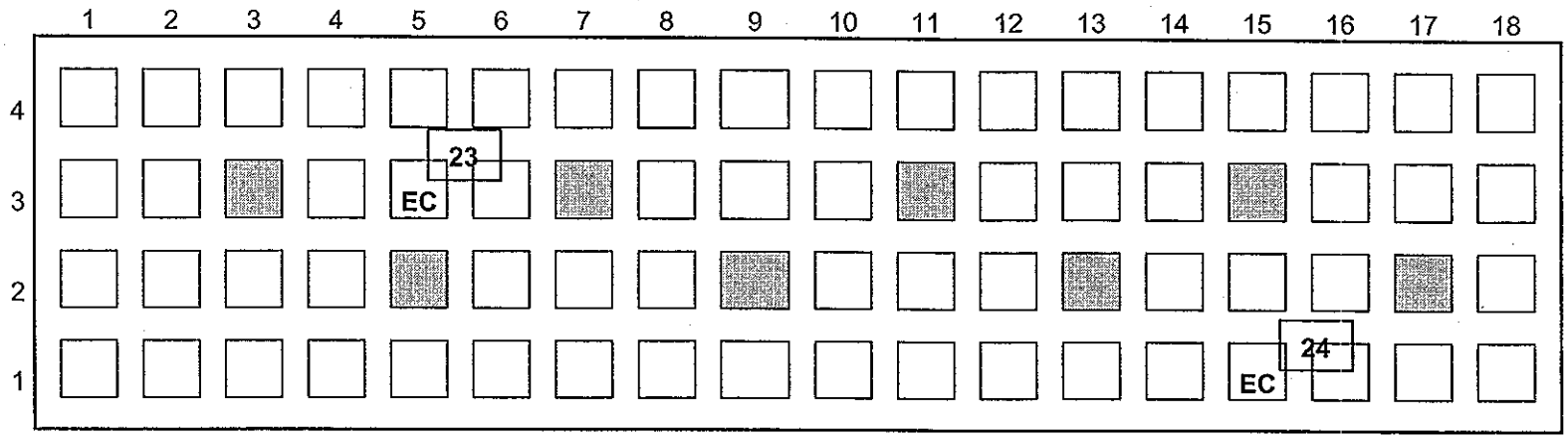

STARBOARD PANEL

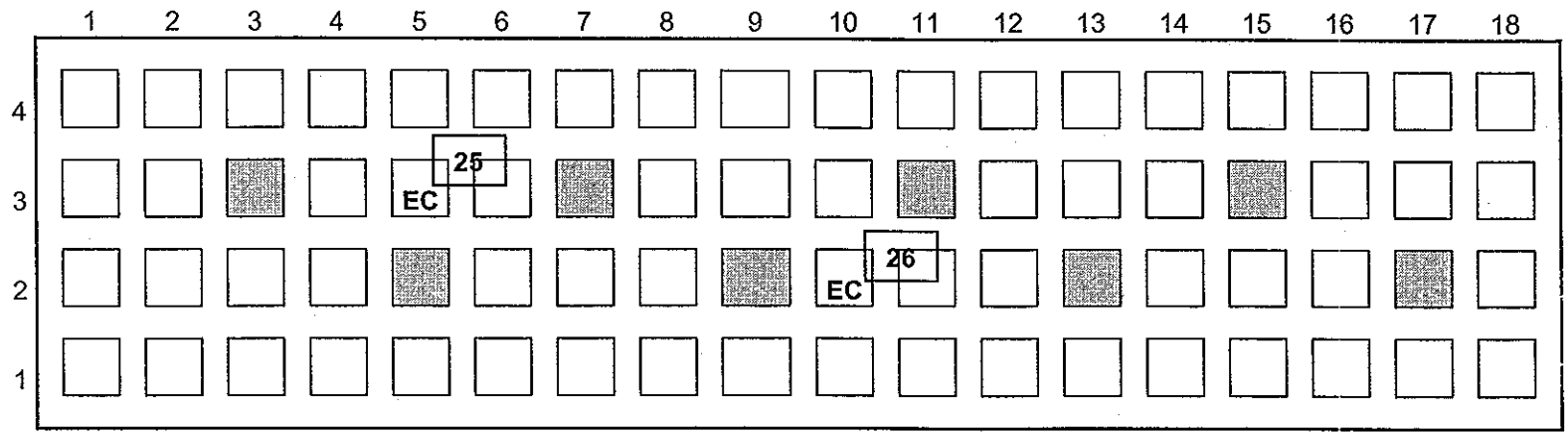

Figure 6-7 Sensors positions on the 4 sides of the ECAL QM

Questo documento contiene informazioni di proprietà di CARLO GAVAZZI SPACE SpA. Tutti i diritti sono riservati.
All information contained in this document are property of CARLO GAVAZZI SPACE SpA. All right reserved.

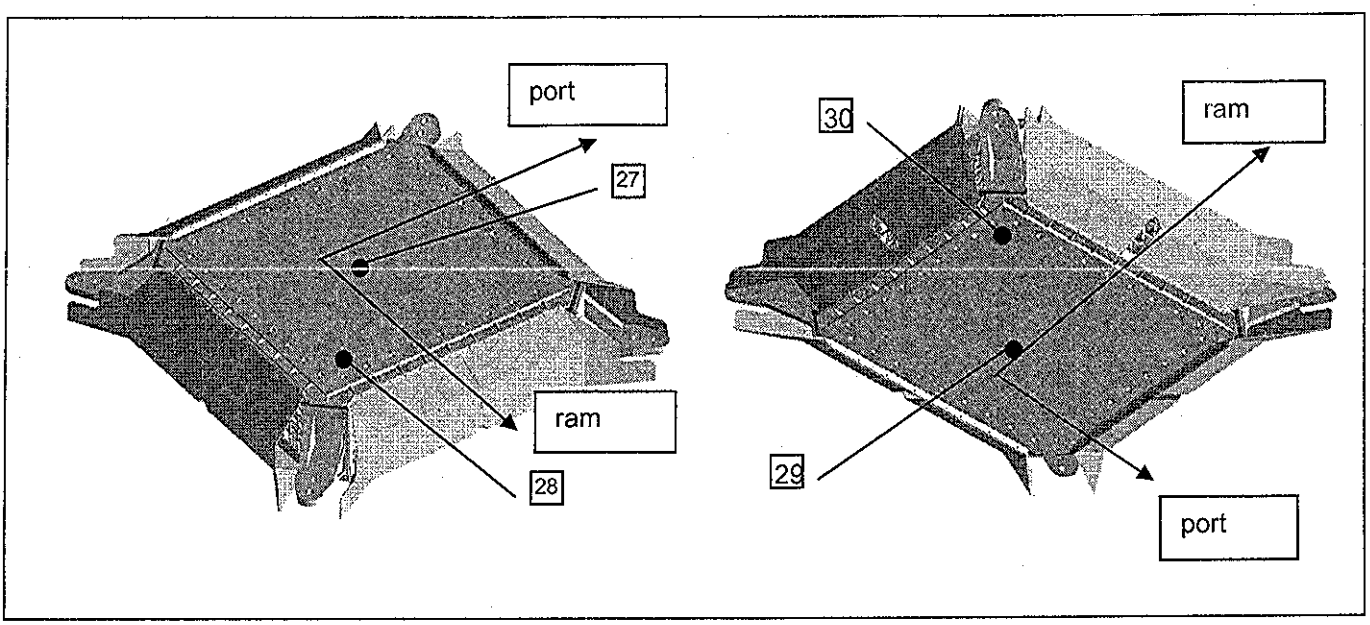

Figure 6-8 Thermal sensor position on the upper and lower honeycomb panels.

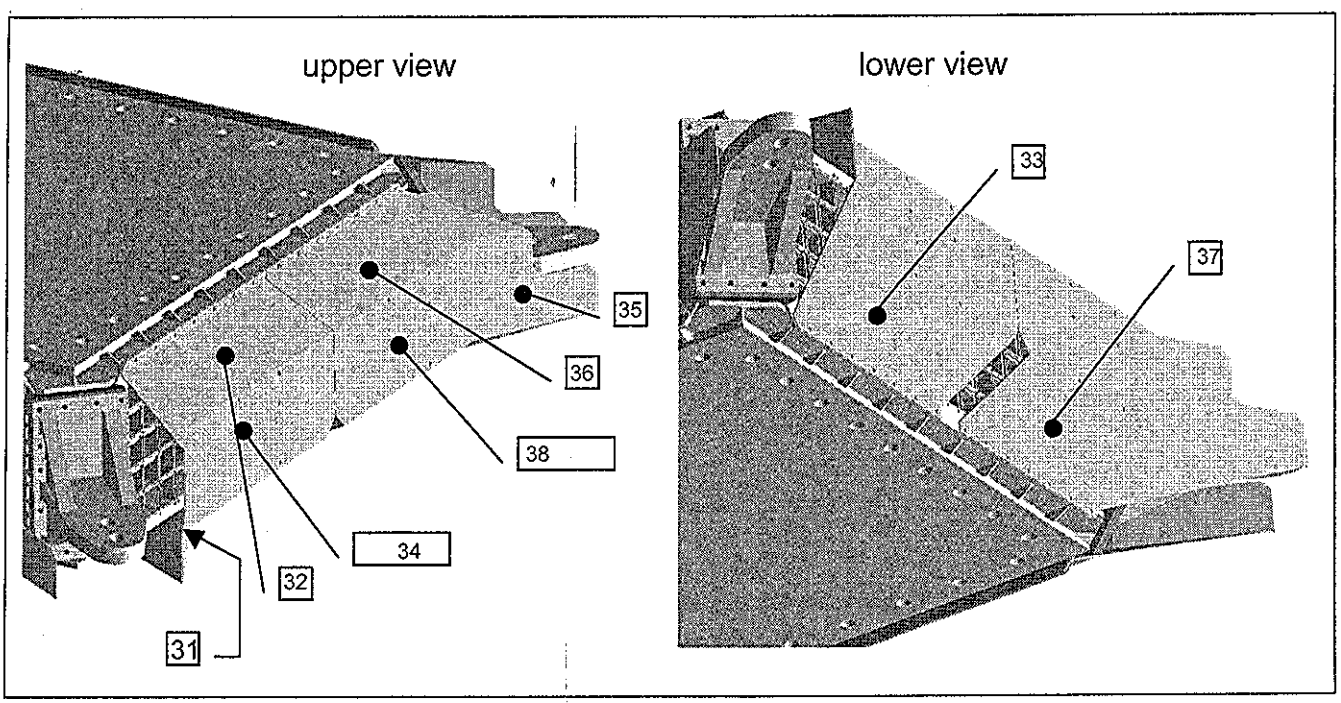

Figure 6-9 Thermal sensors position on ram radiator

Questo documento contiene informazioni di proprietà di CARLO GAVAZZI SPACE SpA. Tutti i diritti sono riservati
All information contained in this document are property of CARLO GAVAZZI SPACE SpA. All right reserved.

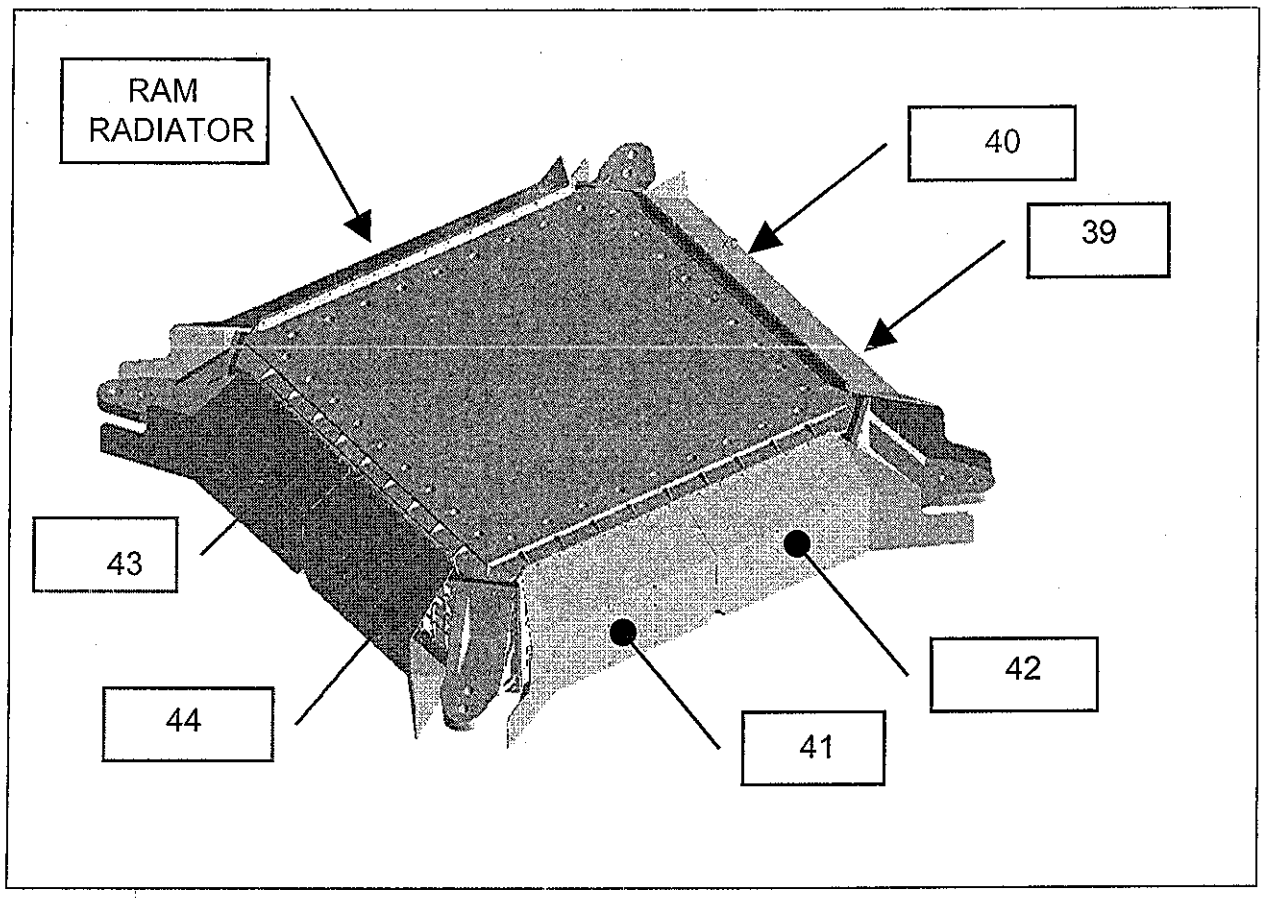

Figure 6-10 Thermal sensors position on other 3 radiators

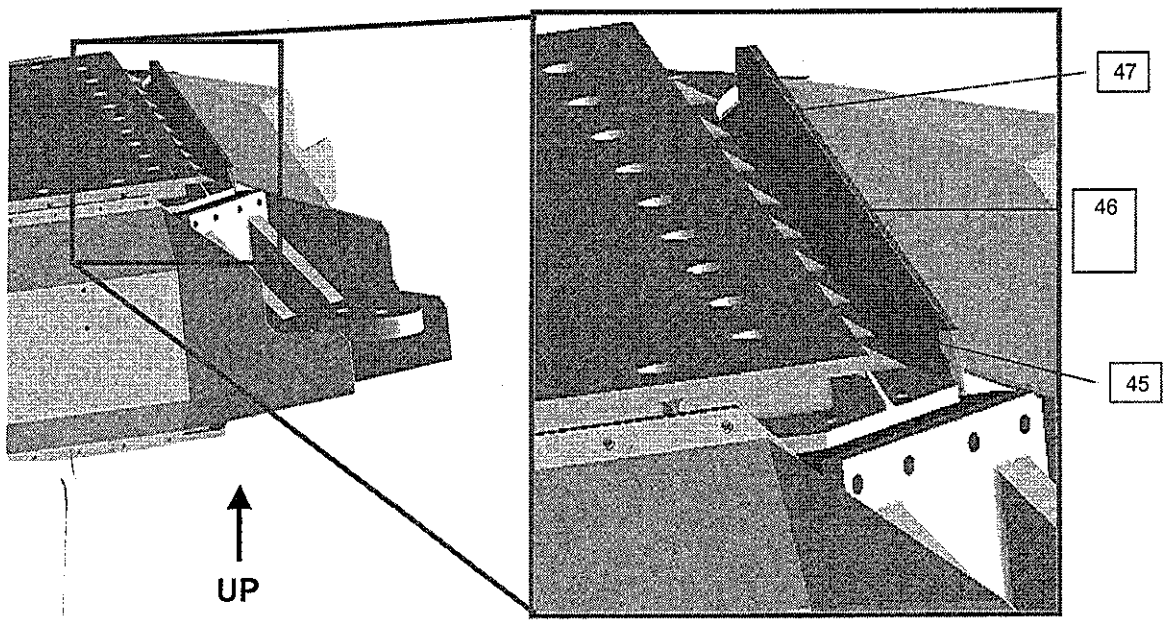

Figure 6-11 Thermal sensors position on upper side of back panel of ram radiator

Questo documento contiene informazioni di proprietà di CARLO GAVAZZI SPACE SpA. Tutti i diritti sono riservati.
All information contained in this document are property of CARLO GAVAZZI SPACE SpA. All right reserved.

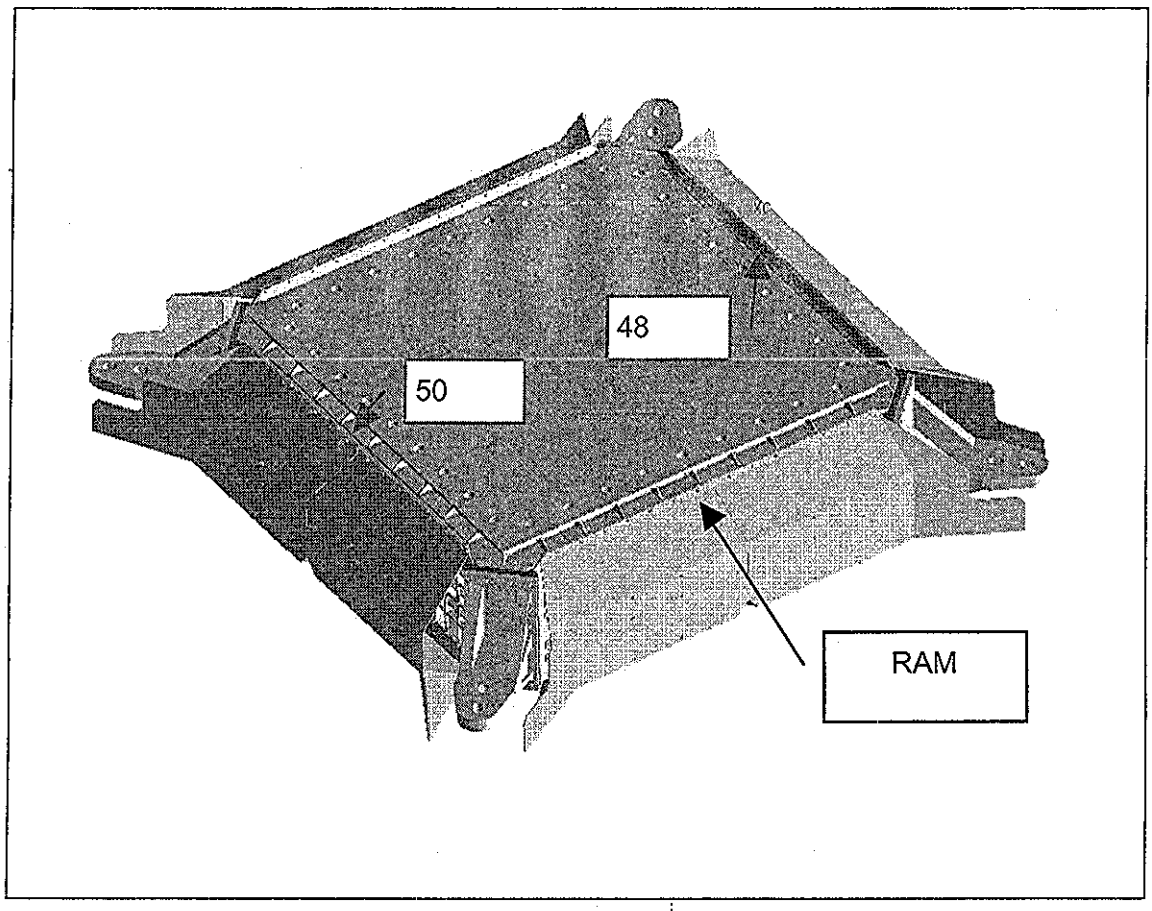

Figure 6-12 Thermal sensors position on upper side of the other 3 back panels

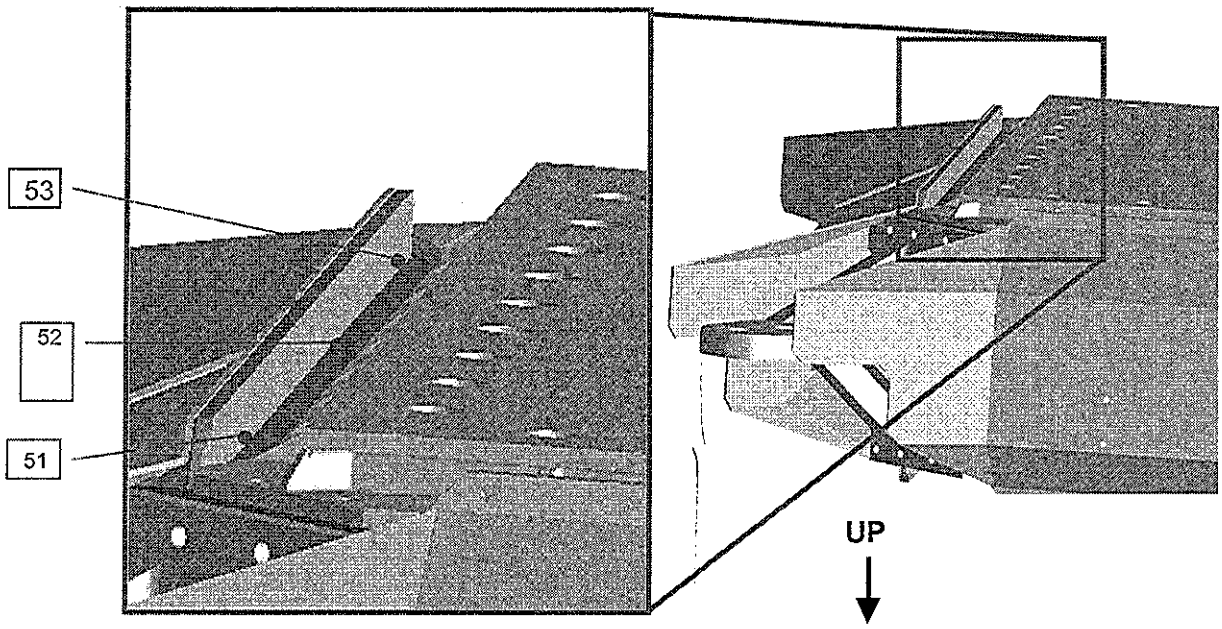

Figure 6-13 Thermal sensors position on lower side of ram back pane

Questo documento contiene informazioni di proprietà di CARLO GAVAZZI SPACE SpA. Tutti i diritti sono riservati.
All information contained in this document are property of CARLO GAVAZZI SPACE SpA. All right reserved.

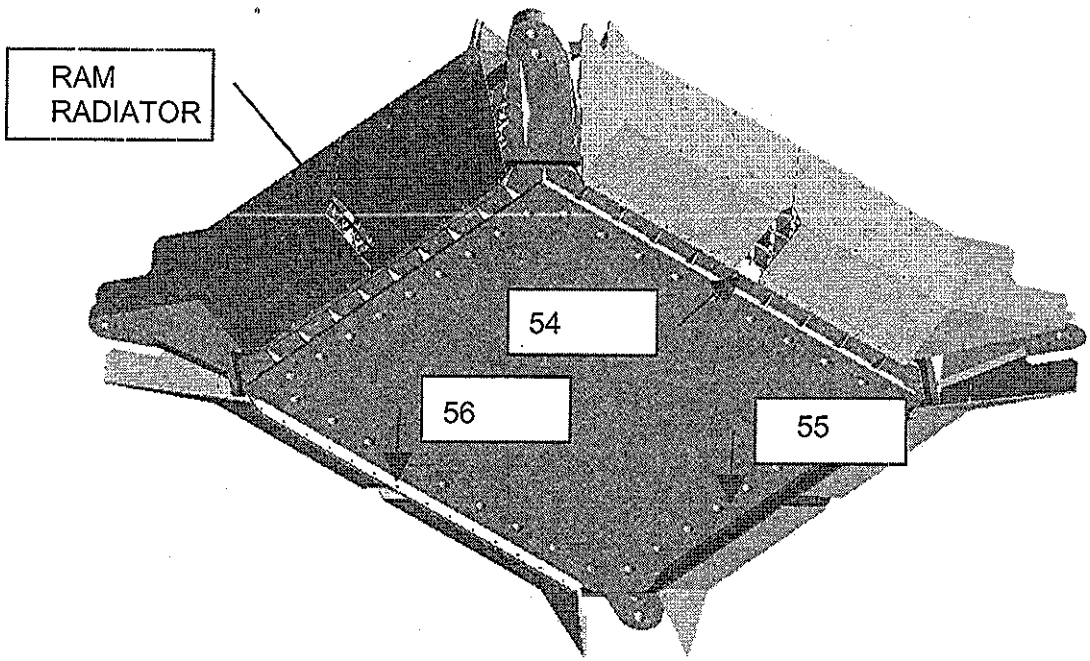

Figure 6-14 Thermal sensors position on lower side of the other 3 back panels

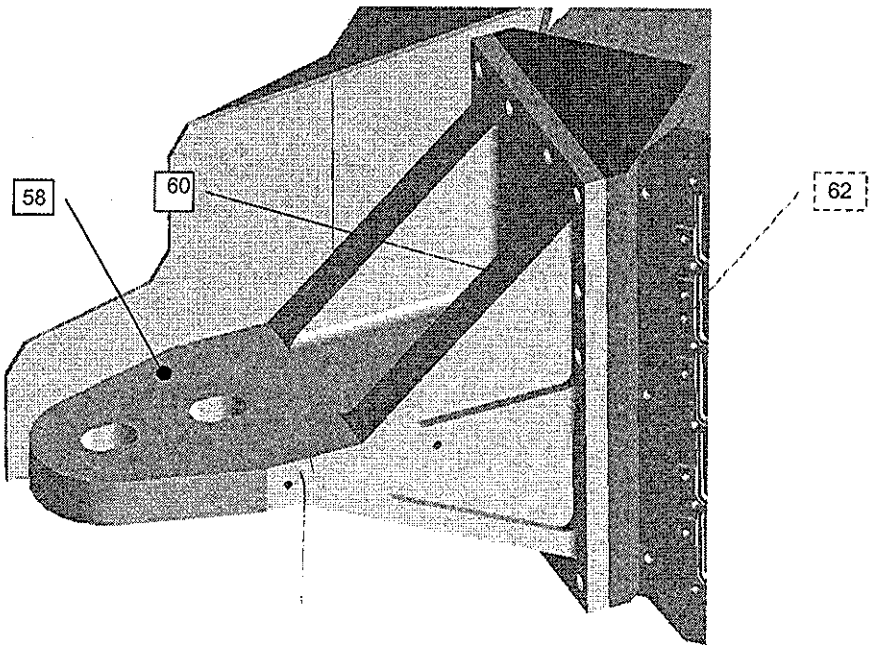

Figure 6-15 Thermal sensors position on ram/starboard corner bracket

Questo documento contiene informazioni di proprietà di CARLO GAVAZZI SPACE SpA Tutti i diritti sono riservati
All information contained in this document are property of CARLO GAVAZZI SPACE SpA. All right reserved.

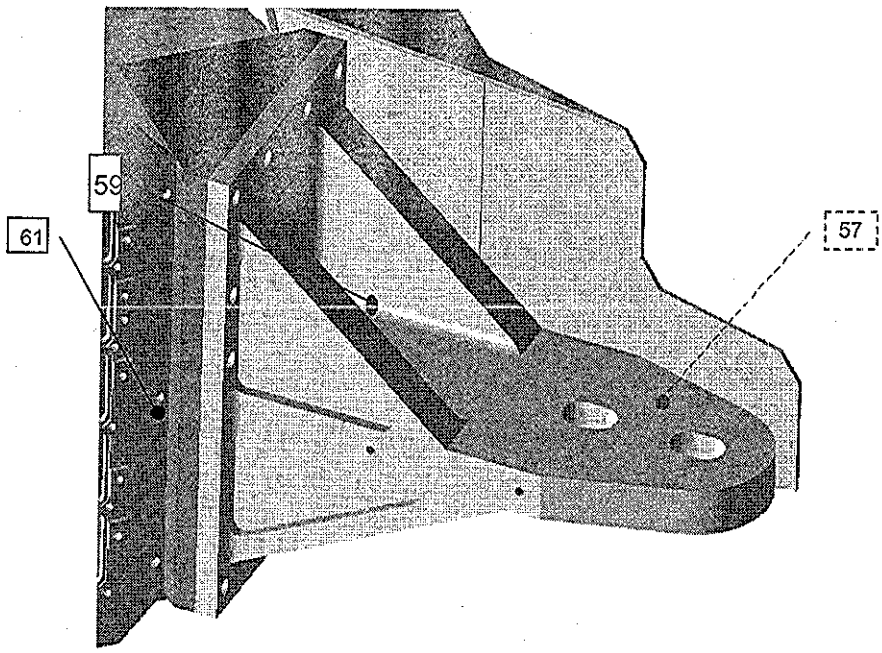

Figure 6-16 Thermal sensors position on ram/port corner bracket.

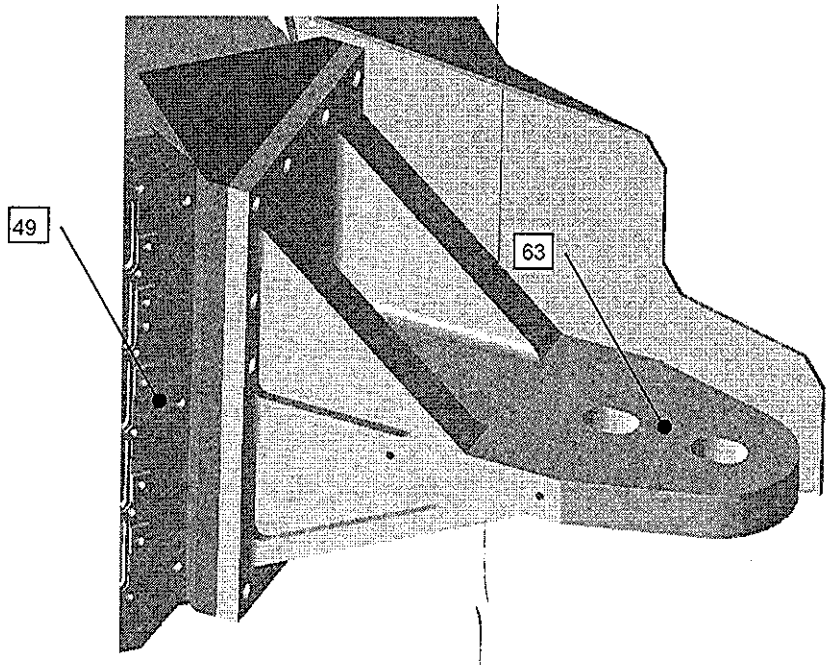

Figure 6-17 Thermal sensors position wake/port corner bracket

Questo documento contiene informazioni di proprietà di CARLO GAVAZZI SPACE SpA. Tutti i diritti sono riservati
All information contained in this document are property of CARLO GAVAZZI SPACE SpA. All right reserved.

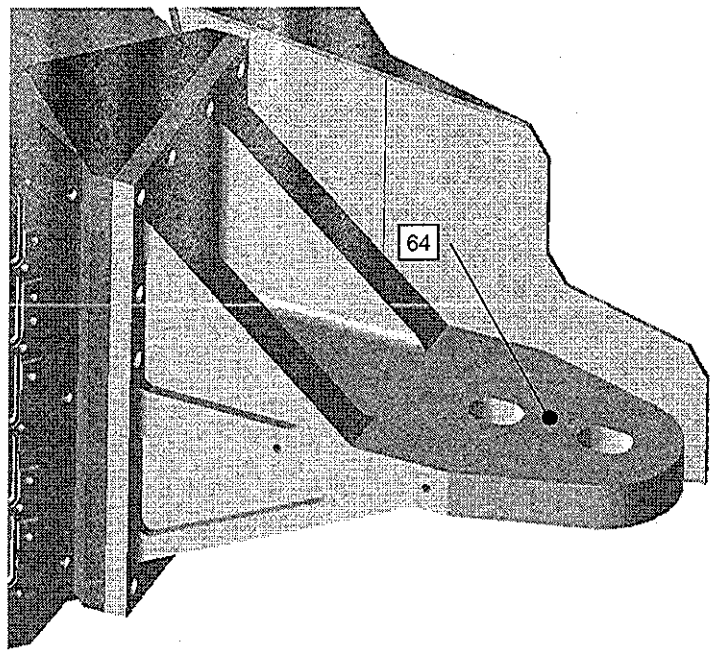

Figure 6-18 Thermal sensors position wake/starboard corner bracket

Questo documento contiene informazioni di proprietà di CARLO GAVAZZI SPACE SpA Tutti i diritti sono riservati.
All information contained in this document are property of CARLO GAVAZZI SPACE SpA. All right reserved.

6.4 FUNCTIONAL TESTS

Functional tests, if any, will be run by ECAL group (INFN-Pisa), according to INFN test procedures and are under INFN-Pisa responsibility. They will not be reported in the test report.
Functional test are therefore not included in the step-by-step procedure.

Questo documento contiene informazioni di proprietà di CARLO GAVAZZI SPACE SpA. Tutti i diritti sono riservati
All information contained in this document are property of CARLO GAVAZZI SPACE SpA. All right reserved.

7. INSTRUMENTATION AND TEST EQUIPMENT

The complete list of the instrumentation used during the test shall be recorded in Table 7.1.
The list shall be filled up during tests and reported in Test Report.

In addition, a crane is necessary to:

–Move the unit inside the test site to the test facility.

–Lift and position the unit inside the test chamber (2 translational degrees of freedom might be required).

–Remove the unit from the test chamber.

The crane should be compatible with the eventual unit support inside the chamber.

Questo documento contiene informazioni di proprietà di CARLO GAVAZZI SPACE SpA Tutti i diritti sono riservati
All information contained in this document are property of CARLO GAVAZZI SPACE SpA. All right reserved.

N.	EQUIPMENT	MANUFACTURER	P/N	S/N	ACCURACY*	NEXT CAL. DATE	REMARKS
1	TV chamber with pressure measurement and temperature acquisition system	Angelantoni	HVT-2000 MC	10107		Conformance certificate (first installation) is dated 31/03/2006	Detailed technical information will be provided by the Facility.

Table 7.1 INSTRUMENT LIST

(*) Where not specified the accuracy is as stated on the instrument manufacturer data sheet

Questo documento contiene informazioni di proprietà di CARLO GAVAZZI SPACE SpA. Tutti i diritti sono riservati.
All information contained in this document are property of CARLO GAVAZZI SPACE SpA. All right reserved.

8. TEST CONDITION

- The UUT shall be tested in its defined configuration: it shall properly closed, all thermal loads shall be present and the UUT thermally related interfaces shall be properly simulated.

- Unless otherwise specified, all measurements are to be performed at the following ambient condition:

Temperature	+25°C +/- 3°C
Relative Humidity (RH)	30%<RH<60%
Pressure	Vacuum, pressure lower than 10^{-5} mbar
Cleanliness	100000 class

- All tests, unless otherwise specified, shall be performed by a suitable laboratory in a proper area. General disposition shall be applied to maximize personnel safety from potential hazards.

- Connectors savers shall be used as applicable to protect the UUT interface connectors.

- Skilled personnel shall be employed.

- All used instruments shall meet the necessary accuracy and shall not degrade the UUT performances.

8.1 MEASUREMENTS ACCURACY

Unless otherwise specified, all measurements are to be performed at the following accuracy:

- Temperature : tolerance on minimum -3/0 °C
  tolerance on maximum 0/3 °C
  Temperature will be measured with a maximum uncertainty of ±1.5 °C
- Pressure : -0/+5% of tolerance on max specified value for pressure above 1.3 x 10^2 Pa (1 Torr)
  ±25% of tolerance on max specified value for pressure 1.3 10^{-1} to 1.3 10^2 Pa
  ±80% of tolerance on max specified value for pressure lower than 1.3x10^{-1} Pa (10-3 Torr)

Questo documento contiene informazioni di proprietà di CARLO GAVAZZI SPACE SpA. Tutti i diritti sono riservati.
All information contained in this document are property of CARLO GAVAZZI SPACE SpA. All right reserved.

9. TEST PROFILE

9.1 TEMPERATURE LEVELS

The **maximum and minimum protoflight qualification temperatures** are summarized in the next table and they are measured on the TRPs previously described (see AD[1]). The temperature levels have been updated according to RD# 5

These temperatures are derived from the requirements on the PMT, and corrected considering the temperature drop between the PMT body and its End Cap. The temperature of 2 PMT bodies shall be recorded during the first cycle of the test, in order to measure the temperature drop between the PMTs and their respective End Caps. The maximum value between the two calculated before shall be called **DT**.

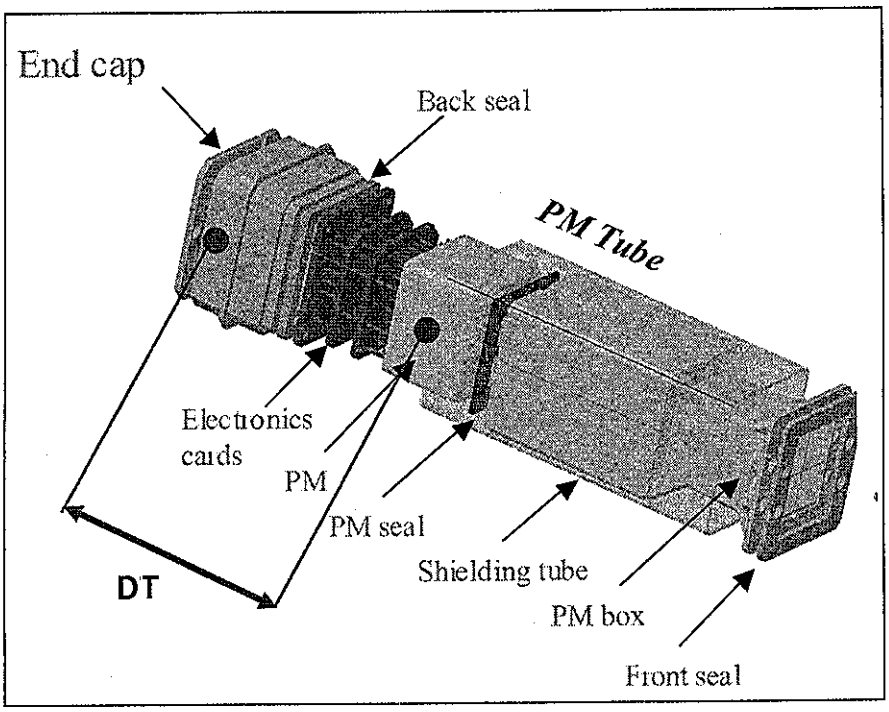

Figure 9-1 Definition of the temperature gradient DT.

The measured value **DT** shall be subtracted from the PMT operational temperature limits (both minimum and maximum) in order to derive, from the requirement at PMT level, the applicable limits at TRP (i.e., End Caps) level.

AMS02-ECAL	PMT level original requirements	TRP temperature during Tests
Maximum Protoflight Qualification Operating	+40°C	**+40°C – DT**
Minimum Protoflight Qualification Operating	-20°C	**-20°C – DT**
Maximum Protoflight Qualification Non Operating	+50°C	**+50°C**
Minimum Protoflight Qualification Non Operating	-30°C	**-30°C**
Minimum Switch ON Temperature: not specified, taken equal to Minimum Protoflight Qualification Operating	-20°C	**-20°C**

Table 9.1 Temperatures for ECAL TRPs

Questo documento contiene informazioni di proprietà di CARLO GAVAZZI SPACE SpA Tutti i diritti sono riservati
All information contained in this document are property of CARLO GAVAZZI SPACE SpA. All right reserved.

Since a temperature gradient is expected among the different TRP during the test, of course it will not be possible to maintain all the TRP temperatures within the range 0/+3°C [-3/0°C] about the qualification temperatures. Therefore, it is intended that the minimum temperature (operational and non operational) shall be applied to the **coldest** TRP Symmetrically, the maximum temperature shall be applied to the **hottest** TRP.

Questo documento contiene informazioni di proprietà di CARLO GAVAZZI SPACE SpA. Tutti i diritti sono riservati.
All information contained in this document are property of CARLO GAVAZZI SPACE SpA. All right reserved.

9.2 TEMPERATURE CYCLES

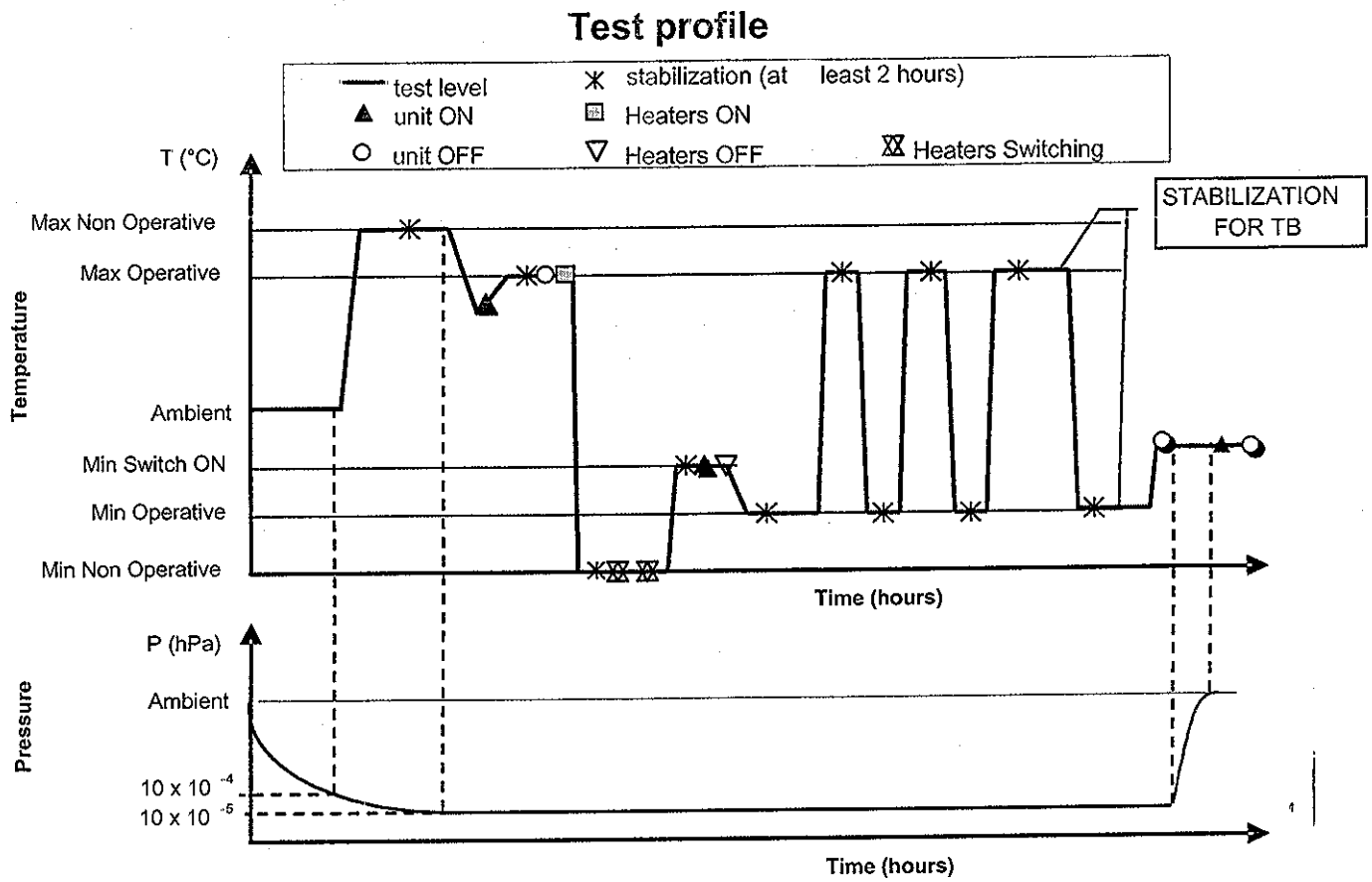

Figure 9-2 Thermal Vacuum Cycling and Thermal Balance Test profile. Stabilization criteria are provided in the step-by-step procedure.

9.3 STABILIZATION CRITERIA

The stabilization criteria during the TVC (cycles 1 to 3) shall be applied the hottest (or coldest) TRP only.
The criteria consists in reaching a temperature derivative smaller than 3K/hr in 10 minutes of observation time.
Afterwards, the TRP shall remain in a temperature window 1°C wide for at least 2 hours.

The stabilization criteria during the TB (cycle 4) shall be applied to the entire set of 4 TRP
The criteria consists in reaching temperature derivatives smaller than 0.5 K/hr in 1 hour of observation time.
Afterwards, each TRP shall remain in a temperature window 1°C wide for at least 5 hours.

Questo documento contiene informazioni di proprietà di CARLO GAVAZZI SPACE SpA Tutti i diritti sono riservati
All information contained in this document are property of CARLO GAVAZZI SPACE SpA. All right reserved.

10.TEST SUCCESS CRITERIA

Thermal vacuum cycling tests shall be considered successful if the following criteria will be satisfied:

a Test conditions according to specification requirements.
b. Acquisition of temperatures of ECAL in hot/cold stabilized condition (TB test) for sufficient number of relevant points for thermal mathematical model correlation purposes.
c. Definition of the Maximum/Minimum ECAL radiator temperature with respect to the maximum/minimum PMT (TRP) allowed temperatures.
d. Internal thermal design is performing according to the specification, i.e. the internal heat dissipating sources are well sunk to the radiator parts, hence showing small delta-T.
e. Heaters are suitably sized and when enabled provide enough power for ECAL survival in non-operational conditions and for switching-on

11.TEST PROCEDURE VARIATION SHEET

In case that for any reason the test procedure has to be changed, the change shall be described in a Procedure Variation Sheet (PVS) as shown in the next page.

The PVS shall contain:

- Reference to the test procedure to be changed
- Reference to the relevant test, procedure page and paragraph
- Description of the change, possibly in the form was.....is.....
- Reason for change
- Test Engineer, QA, Test conductor signatures and dates
- Customer signature and date (when required).

Each PVS shall be identified by a reference number provided in sequential order.

All the generated PVS shall be collected in a dedicated section of the Test Report.

Questo documento contiene informazioni di proprietà di CARLO GAVAZZI SPACE SpA. Tutti i diritti sono riservati
All information contained in this document are property of CARLO GAVAZZI SPACE SpA. All right reserved.

PROCEDURE VARIATION SHEET ref. N°:

Test Procedure Ref.:	Page Revised:	Paragraph Revised:

Description of Change:

Reason for Change:

CONCURRENCE

Test Cond.	QA	System Eng.		Customer
Date	Date	Date		Date

Questo documento contiene informazioni di proprietà di CARLO GAVAZZI SPACE SpA. Tutti i diritti sono riservati
All information contained in this document are property of CARLO GAVAZZI SPACE SpA. All right reserved.

12.TEST DATA SHEETS

The step-by-step procedure sheets are provided in the following pages.

12.1 DATA SHEETS FILLING UP

The following fields of the data sheets:

- UUT DATA (including Model, Item, C.I., S/N)
- Measured value

shall be filled up during the test performances and shall be part of the Test Report together with photographs, sketches, etc. eventually useful to document the test execution/result.

Remarks field shall be used as a minimum to provide, where appropriate, reference to NCRs and PVS.

Test Report reference data shall be added in the relevant field.

Each data sheet (including the attachments) shall be certified by QA stamp and signature together with the Test Conductor signature and date.

Questo documento contiene informazioni di proprietà di CARLO GAVAZZI SPACE SpA Tutti i diritti sono riservati
All information contained in this document are property of CARLO GAVAZZI SPACE SpA. All right reserved.

UUT DATA :	Model	Item	C.I.	S/N

STEP n°	TEST SEQUENCE	EXPECTED VALUE	MEASURED VALUE	REMARKS
1.0	**Vacuum thermal cycles**			
1.1	PRELIMINARY OPERATIONS			
1.2	Take the ECAL out of the container	OK		
1.3	Put the MLI on the lower honeycomb panel	OK		
1.4	Install the flight radiators on the ECAL QM	OK		
1.5	Position the ECAL on the mounting panel inside the chamber, with the Teflon spacers	OK		
1.6	Connect the electronic cables from the UUT to the inner side of the chamber flange.	OK		
1.7	Connect the temperature sensors harness to the flange, and to the data acquisition system.	OK		
1.8	Connect the electronic cables from the EGSE to the outer side of the chamber flanges.	OK		
1.9	Switch on all the Test Equipment.	OK		
1.10	Check the temperature sensors.	ALL CORRECT		
1.11	Close the thermal vacuum chamber.	OK		
1.12	Start data acquisition	START SCAN		

DATE:	TEST CONDUCTOR	QA	CUSTOMER

Questo documento contiene informazioni di proprietà di CARLO GAVAZZI SPACE SpA. Tutti i diritti sono riservati.
All information contained in this document are property of CARLO GAVAZZI SPACE SpA. All right reserved.

UUT DATA :	Model	Item	C.I.	S/N

STEP n°	TEST SEQUENCE	EXPECTED VALUE	MEASURED VALUE	REMARKS
1.13	Switch on the ECAL (flight-like PMT ON, PMT power dummies ON, EIB power dummies ON)	ON		
1.14	Check ECAL power dissipation	66 [W]±10%		
1.15	Switch OFF the ECAL	OFF		
2.0	**First ECAL thermal cycle**			
2.1	Switch ON the vacuum pump	ON		
2.2	When chamber pressure is lower than $1x10^{-4}$ hPa, Increase the temperature to the **maximum protoflight qualification non-operating** temperature.	$P<1x10^{-4}$hPa T= +50°C		
2.3	When $\Delta T/\Delta t \leq 3K/h$ is reached on the hottest TRP temperature sensor, temperature shall stabilize for at least 2 hours. Record elapsed time. Record TRP and chamber shroud temperatures.	t> 2 hr T_{TRP}= +50°C $T_{chamber}$ =...		
2.4	Decrease the temperature of the chamber in order to lower the temperature of the hottest TRP by ~20°C.	T_{TRP}~ +30°C		
2.5	As soon as the hottest TRP temperature falls below +30°C, Switch ON the ECAL	ON		
2.6	Tune the chamber temperature in order to reach on the sensors (channels # 52 and # 53, on the PMT bodies) a temperature of +40°C	T_{PMT}= +40°C		

DATE.	TEST CONDUCTOR	QA	CUSTOMER

Questo documento contiene informazioni di proprietà di CARLO GAVAZZI SPACE SpA. Tutti i diritti sono riservati.
All information contained in this document are property of CARLO GAVAZZI SPACE SpA. All right reserved.

UUT DATA :	Model	Item	C.I.	S/N

STEP n°	TEST SEQUENCE	EXPECTED VALUE	MEASURED VALUE	REMARKS
2.7	When $\Delta T/\Delta t \leq 3K/h$ is reached over at least 10 minutes observation time(on the TRP temperature sensors AND on the sensors (channels # 52 and # 53): Stabilize for at least 2 hours. Record elapsed time. Record the TRP and TV Chamber shroud temperature. Record the power consumption/dissipation	t> 2 hr T_{PMT}= +40°C T_{TRP} ~+35°C $T_{chamber}$ =... 66 [W]±10%		
2.8	Define the quantity **DT** as the maximum temperature gradient between the sensors (channels # 52 and # 53) and the corresponding End Cap temperature.	DT= max({T_{PMT}-T_{TRP}}$_i$)		
2.9	Switch OFF the ECAL, enable ECAL Heaters main sections.	ECAL OFF Heaters ON		
2.10	Decrease the temperature to the **minimum protoflight qualification non-operating temperature.**	T= -30 °C		
2.11	Monitor heaters power dissipation, and register the time at which the thermostats are switching. Registers the temperature of the sensors close to the thermostats.	Time 1,2 = dd/mm/yyy, hh.mm T_{sensor} = ...°C		

DATE:	TEST CONDUCTOR	QA	CUSTOMER

Questo documento contiene informazioni di proprietà di CARLO GAVAZZI SPACE SpA. Tutti i diritti sono riservati.
All information contained in this document are property of CARLO GAVAZZI SPACE SpA. All right reserved.

UUT DATA :	Model	Item	C.I.	S/N

STEP n°	TEST SEQUENCE	EXPECTED VALUE	MEASURED VALUE	REMARKS
2.12	When $\Delta T/\Delta t \leq 3K/h$ is reached over at least 10 minutes observation time(on the coldest TRP temperature sensor) : Stabilize for at least 2 hours. Record elapsed time. Record the TRP and TV Chamber shroud temperature. Record heaters consumption	t> 2 hr T_{TRP}=-30°C $T_{chamber}$ =... 70 [W]		
2.13	Switch from main to redundant heaters power supply;	Main OFF Redundant ON		
2.14	Measure heaters power dissipation. Verify for at least 10 minutes that no temperature changes occur larger than 3°C on all the sensors.	70 [W] ΔT<3°C		
2.15	Switch from redundant to main heaters power supply;	Redundant OFF Main ON		
2.16	Increase the temperature to the **minimum protoflight switch ON** temperature.	T_{TRP}=-20°C		

DATE:	TEST CONDUCTOR	QA	CUSTOMER

Questo documento contiene informazioni di proprietà di CARLO GAVAZZI SPACE SpA. Tutti i diritti sono riservati.
All information contained in this document are property of CARLO GAVAZZI SPACE SpA. All right reserved.

UUT DATA :	Model	Item	C.I.	S/N

STEP n°	TEST SEQUENCE	EXPECTED VALUE	MEASURED VALUE	REMARKS
2.17	When $\Delta T/\Delta t \leq 3K/h$ is reached over at least 10 minutes observation time(on the coldest TRP temperature sensor) : Stabilize for at least 2 hours. Record elapsed time. Record the TRP and TV Chamber shroud temperature. Record heaters consumption	t> 2 hr T_{TRP}=-20°C $T_{chamber}$ =… 70 [W]		
2.18	Switch on the ECAL Record ECAL consumption	ON 66 [W]±10%		
2.19	Disable the heaters	Heaters OFF		
2.20	Tune the chamber temperature to maintain on the coldest TRP a temperature equal to the **minimum protoflight qualification operating minus DT** (as defined at step 2.8)	T_{TRP}=-20°C – DT		
2.21	When $\Delta T/\Delta t \leq 3K/h$ is reached over at least 10 minutes observation time(on the coldest TRP temperature sensor) : Stabilize for at least 2 hours. Record elapsed time. Record the TRP and TV Chamber shroud temperature. Record the power consumption/dissipation	t> 2 hr T_{TRP}=-20°C – DT $T_{chamber}$ =… 66 [W]±10%		

DATE:	TEST CONDUCTOR	QA	CUSTOMER

Questo documento contiene informazioni di proprietà di CARLO GAVAZZI SPACE SpA. Tutti i diritti sono riservati.
All information contained in this document are property of CARLO GAVAZZI SPACE SpA. All right reserved.

UUT DATA :	Model	Item	C.I.	S/N

STEP n°	TEST SEQUENCE	EXPECTED VALUE	MEASURED VALUE	REMARKS
3.0	**Second ECAL thermal cycle**			
3.1	Increase the temperature to the **maximum protoflight qualification operating temperature minus DT** (as defined at step 2.8)	T_{TRP}=+40°C – DT		
3.2	When $\Delta T/\Delta t \leq 3K/h$ is reached over at least 10 minutes observation time(on the hottest TRP temperature sensor) : Stabilize for at least 2 hours. Record elapsed time and temperature. Record the TRP and TV Chamber shroud temperature. Record the power consumption/dissipation	t> 2 hr T_{TRP}=+40°C – DT $T_{chamber}$ =… 66 [W]±10%		
3.3	Decrease the temperature to the **minimum protoflight qualification operating** temperature **minus DT** (as defined at step 2.8)	T_{TRP}=-20°C – DT		
3.4	When $\Delta T/\Delta t \leq 3K/h$ is reached over at least 10 minutes observation time(on the coldest TRP temperature sensor) : Stabilize for at least 2 hours. Record elapsed time and temperature. Record the TRP and TV Chamber shroud temperature. Record the power consumption/dissipation	t> 2 hr T_{TRP} =-20°C – DT $T_{chamber}$ =… 66 [W]±10%		

DATE:	TEST CONDUCTOR	QA	CUSTOMER

Questo documento contiene informazioni di proprietà di CARLO GAVAZZI SPACE SpA. Tutti i diritti sono riservati.
All information contained in this document are property of CARLO GAVAZZI SPACE SpA. All right reserved.

UUT DATA :	Model	Item	C.I.	S/N

STEP n°	TEST SEQUENCE	EXPECTED VALUE	MEASURED VALUE	REMARKS
4.0	**Third ECAL thermal cycle**			
4.1	Increase the temperature to the **maximum protoflight qualification operating temperature minus DT** (as defined at step 2.8)	T_{TRP}=+40°C – DT		
4.2	When $\Delta T/\Delta t \leq 3K/h$ is reached over at least 10 minutes observation time(on the hottest TRP temperature sensor) : Stabilize for at least 2 hours. Record elapsed time and temperature. Record the TRP and TV Chamber shroud temperature. Record the power consumption/dissipation	t> 2 hr T_{TRP}=+40°C – DT $T_{chamber}$ =… 66 [W]±10%		
4.3	Decrease the temperature to the **minimum protoflight qualification operating** temperature **minus DT** (as defined at step 2.8)	T_{TRP}=-20°C – DT		
4.4	When $\Delta T/\Delta t \leq 3K/h$ is reached over at least 10 minutes observation time(on the coldest TRP temperature sensor) : Stabilize for at least 2 hours. Record elapsed time and temperature. Record the TRP and TV Chamber shroud temperature. Record the power consumption/dissipation	t> 2 hr T_{TRP} =-20°C – DT $T_{chamber}$ =… 66 [W]±10%		

DATE:	TEST CONDUCTOR	QA	CUSTOMER

Questo documento contiene informazioni di proprietà di CARLO GAVAZZI SPACE SpA. Tutti i diritti sono riservati.
All information contained in this document are property of CARLO GAVAZZI SPACE SpA. All right reserved.

UUT DATA :	Model	Item	C.I.	S/N

STEP n°	TEST SEQUENCE	EXPECTED VALUE	MEASURED VALUE	REMARKS
5.0	**Fourth ECAL thermal cycle**			
5.1	Increase the temperature to the **maximum protoflight qualification operating temperature minus DT** (as defined at step 2.8)	T_{TRP}=+40°C – DT		
5.2	When $\Delta T/\Delta t \leq 0.5$K/h is reached (on ALL the temperature sensor) : Stabilize for at least 5 hours. Record elapsed time and temperature. Record the TRP and TV Chamber shroud temperature. Record the power consumption/dissipation	t> 5 hr T_{TRP}=+40°C – DT $T_{chamber}$ =… 66 [W]±10%		
5.3	Decrease the temperature to the minimum protoflight qualification operating temperature minus DT (as defined at step 2.8)	T_{TRP}=-20°C – DT		
5.4	When $\Delta T/\Delta t \leq 0.5$K/h is reached (on all the temperature sensor) : Stabilize for at least 5 hours. Record elapsed time and temperature. Record the TRP and TV Chamber shroud temperature. Record the power consumption/dissipation	t> 5 hr T_{TRP} =-20°C – DT $T_{chamber}$ =… 66 [W]±10%		
5.5	Increase the temperature to the ambient temperature	T_{TRP} = +25°C		
5.6	Switch off the ECAL	ECAL OFF		
5.7	Increase chamber pressure to ambient pressure	P=1000.0 hPa		
5.8	Switch ON ECAL Record the power consumption/dissipation	ON 66 [W]±10%		

DATE:	TEST CONDUCTOR	QA	CUSTOMER

Questo documento contiene informazioni di proprietà di CARLO GAVAZZI SPACE SpA. Tutti i diritti sono riservati.
All information contained in this document are property of CARLO GAVAZZI SPACE SpA. All right reserved.

UUT DATA :	Model	Item	C.I.	S/N

STEP n°	TEST SEQUENCE	EXPECTED VALUE	MEASURED VALUE	REMARKS
5.9	Switch OFF ECAL	OFF		
5.10	Stop data acquisition	OFF		
5.11	Unit removed from the chamber	OK		

DATE:	TEST CONDUCTOR	QA	CUSTOMER

Questo documento contiene informazioni di proprietà di CARLO GAVAZZI SPACE SpA. Tutti i diritti sono riservati.
All information contained in this document are property of CARLO GAVAZZI SPACE SpA. All right reserved.

S.E.R.M.S. s.r.l.

TECHNICAL REPORT

TVC_Technical Report_A03.doc
Date: 28th February 2006

Laboratory for the study of radiation effect on space materials
Via Pentima Bassa, 21 Terni - 05100 TR - phone/fax: +39 0744 49 29 13

Reference	Content
Thermo-Vacuum Chamber (TVC)	Description of the chamber, flanges, feedthrough and equipment

signature

prepared by :	28/02/06 *data*	*Ing. Serena Borsini*
controlled by:	28/02/06 *data*	*Ing.Borsini Serena*
approved by:	28/02/06 *data*	

change record

date	change description	revision
20/12/05	First emission	A01
18/01/06	Description of connectors-vacuum side	A02
28/02/06	Description of the chamber performance and available equipment	A03
31/08/06	Description of the available flanges Description of the available connectors	A04

INDEX

INTRODUCTION 2

DESCRIPTION OF THE THERMO-VACUUM CHAMBER 3

DIMENSION OF THE TV CHAMBER AND TECHNICAL DATA 3

DESCRIPTION OF THE DATA CHAMBER 5

DESCRIPTION OF CHAMBER PERFORMANCE 7

TEST DONE DURING THE TRIAL PHASE 7
CHECK OF COLD PLATE TEMPERATURE UNIFORMITY 11
ISO K FLANGES 16
HIGH VOLTAGE FLANGE 21
FLANGES WITH LEMO FEED-THROUGH 21

DESCRIPTION OF THE AVAILABLE CONNECTORS 23

DESCRIPTION OF THE AVAILABLE EQUIPMENT 26

HEATERS 26
STRAIN GAUGES 27
TEMPERATURE SENSORS (PT100) 28
TEMPERATURE CONTROLLER 28
CHO-TERM - THERMALLY CONDUCTIVE ELASTOMER INSULATOR 28

INTRODUCTION

Aim of this report is to give some technical information about the thermo vacuum chamber of SERMS laboratory, flanges, feedthrough and the equipment available at the moment. The chamber was certified by the supplier (Angelantoni Industrie SpA) and is ready to be used.

The information included in this document can be used to design and schedule thermo-vacuum tests and the related data acquisition using PT100 sensors, strain gauges, heaters, etc.

DESCRIPTION OF THE THERMO-VACUUM CHAMBER

Dimension of the TV Chamber and technical data

- Diameter of the inner cylinder (shroud): 2.100 mm;
- Length of the cylinder: 2.100 mm;
- Minimum pressure: $5x10^{-5}$ mbar (nominal value); registered value during commissioning (chamber without any test item inside): $3x10^{-7}$ mbar;
- Sliding door with three plates (cold plates) fixed on the inner side furnished of M5 holes to fix the test item;
- Dimension of the cold plates:
  - Lower cold plate mm 500 x 1820
  - Middle cold plate mm 500 x 1970
  - Upper cold plate mm 500 x 1550
- Temperature range for the shroud: -70 ÷ +125 °C;
- Temperature range for the cold plates: -70 ÷ +125 °C;
- Average temperature gradient 1°C/min (in the range -20 ÷ +50 °C for the cold plates and in all the range for the shroud).

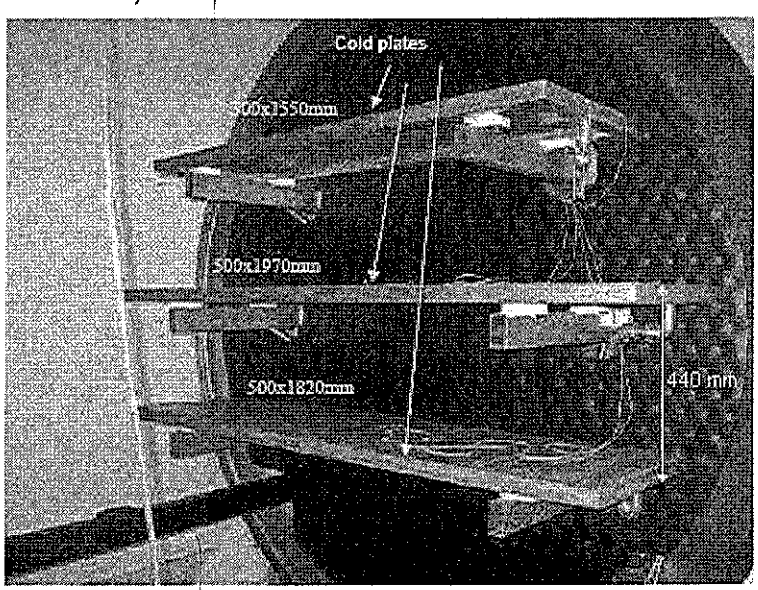

Figure 1 – Dimensions of cold plates.

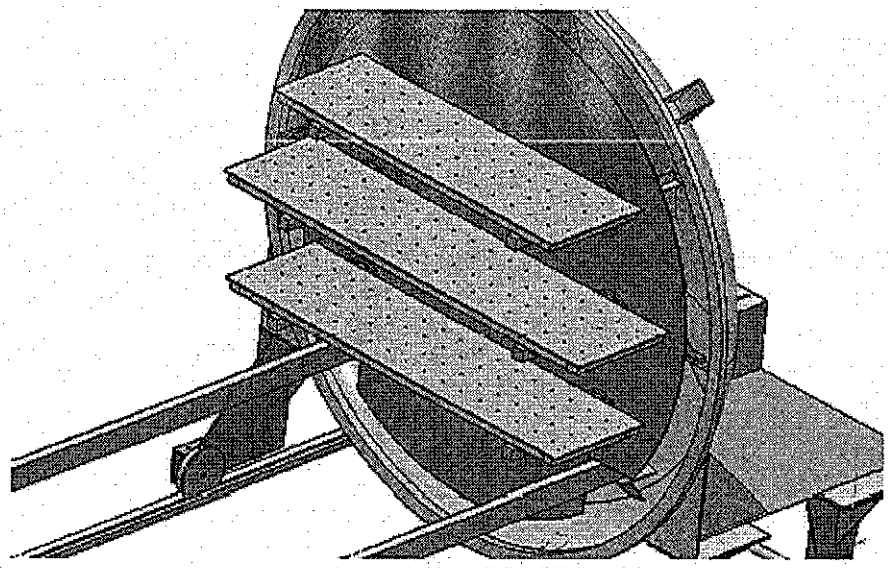

Figure 2 – M5 holes on cold plates.

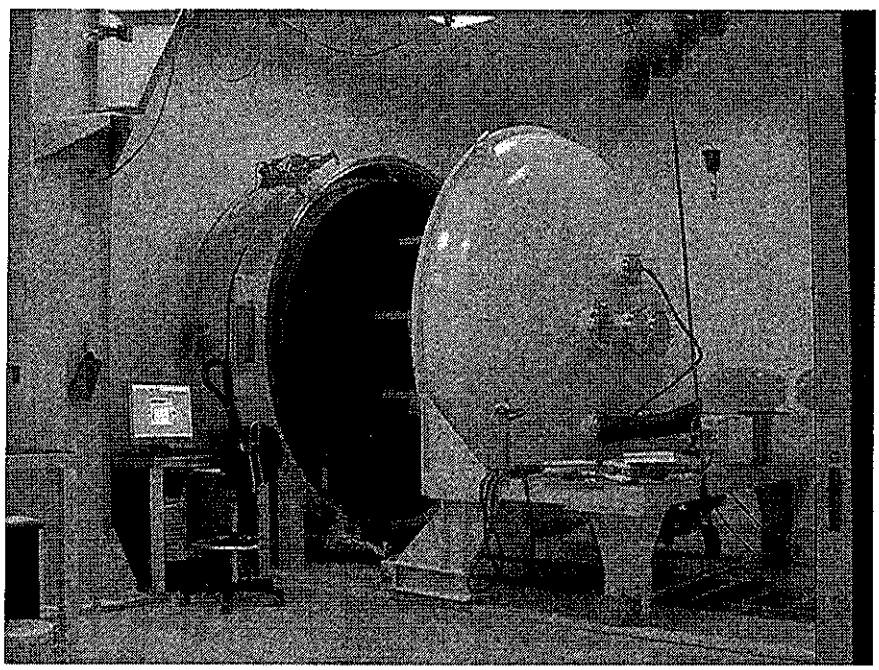

Figure 3 – Thermo-Vacuum Chamber.

DESCRIPTION OF THE DATA CHAMBER

The software used to monitor the chamber is able to acquire up to 22 parameters (see Figure 4). Through these signals the set of the chamber can be evaluated and monitored. The temperature sensors of the camera acquire signal every 5 seconds.

During a test, additional test temperature sensors (64 at maximum) can be used to control and monitor the temperature variation of the test item. These sensors can be acquired using a National Instrument data acquisition system.

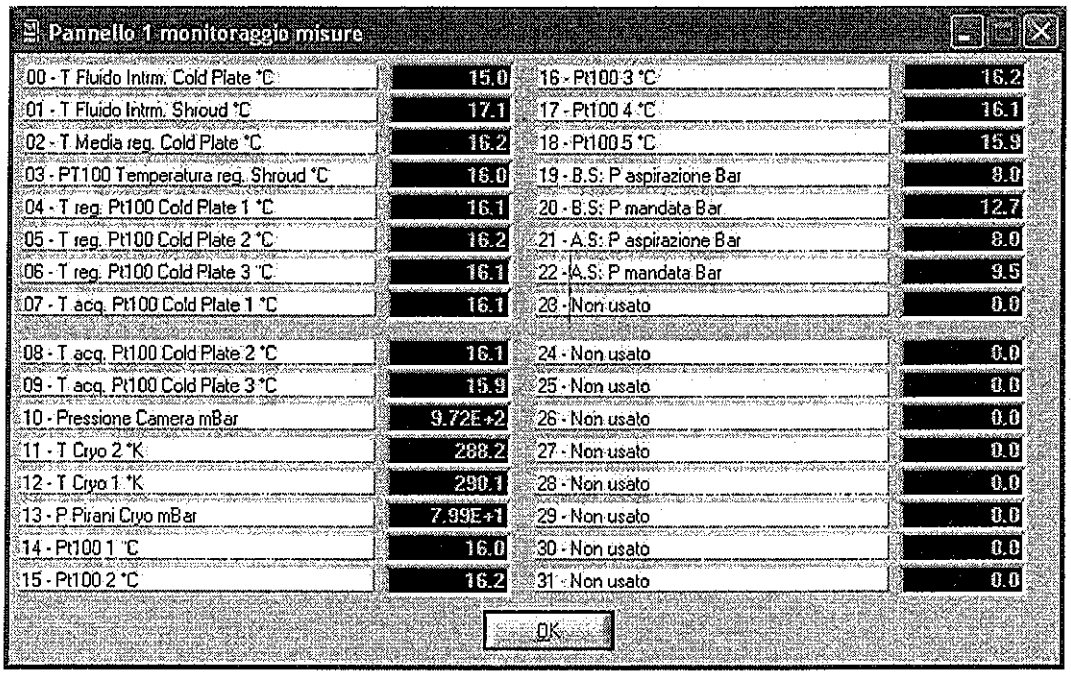

Figure 4 – Parameters used to monitor the chamber.

The acquired data can be reported in a graph as a function of the time.

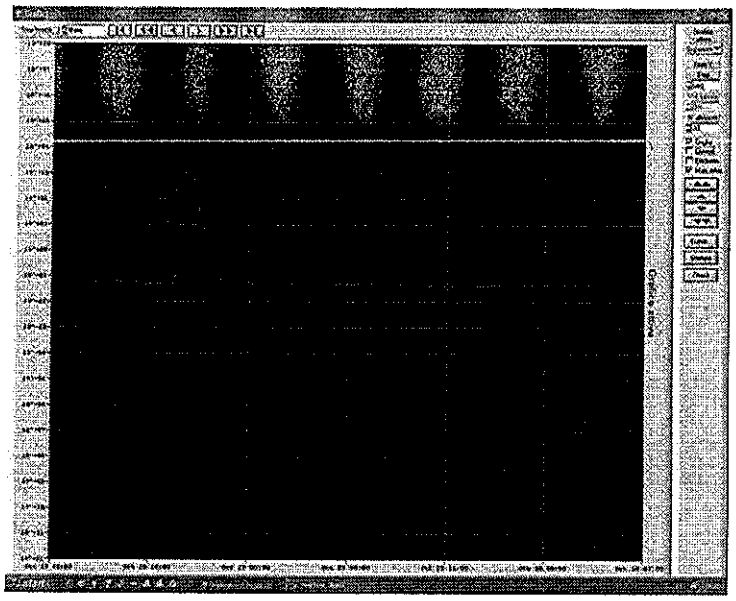

Figure 5 – Pressure of the chamber vs. time.

Using cursor on the graph, the temperature and pressure gradient can be evaluated.

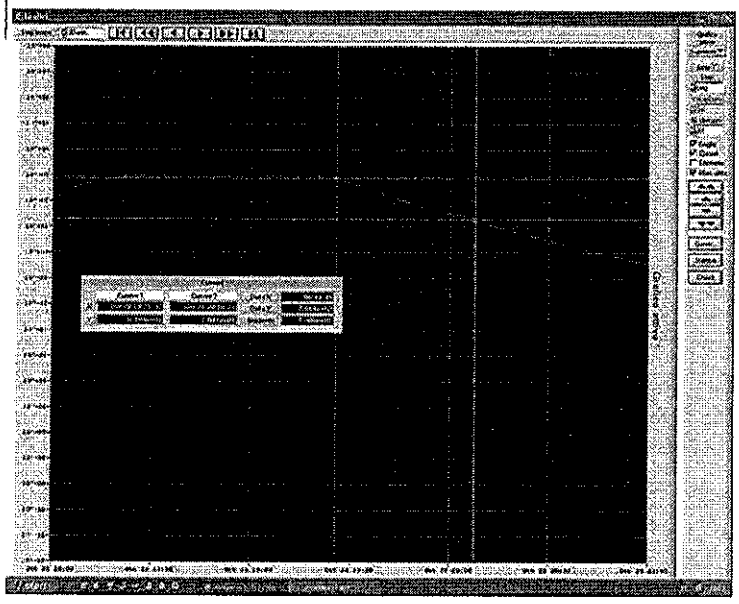

Figure 6 – Cursor to evaluate temperature and pressure gradient.

All the registered data can be converted in ASCII format.

DESCRIPTION OF CHAMBER PERFORMANCE

Test done during the trial phase

In this section the graphs and data obtained during the trial phase are reported. During this phase all the function and performance of the chamber were tested: pressure range and the temperature range of cold plate and shroud.

Six temperature sensors (PT100) were placed on the shroud in order to monitor all the surface uniformly and three PT100 were placed on the cold plates (one each CP).

The acquisition rate of sensors (both temperature and pressure) was set to 5 sec.

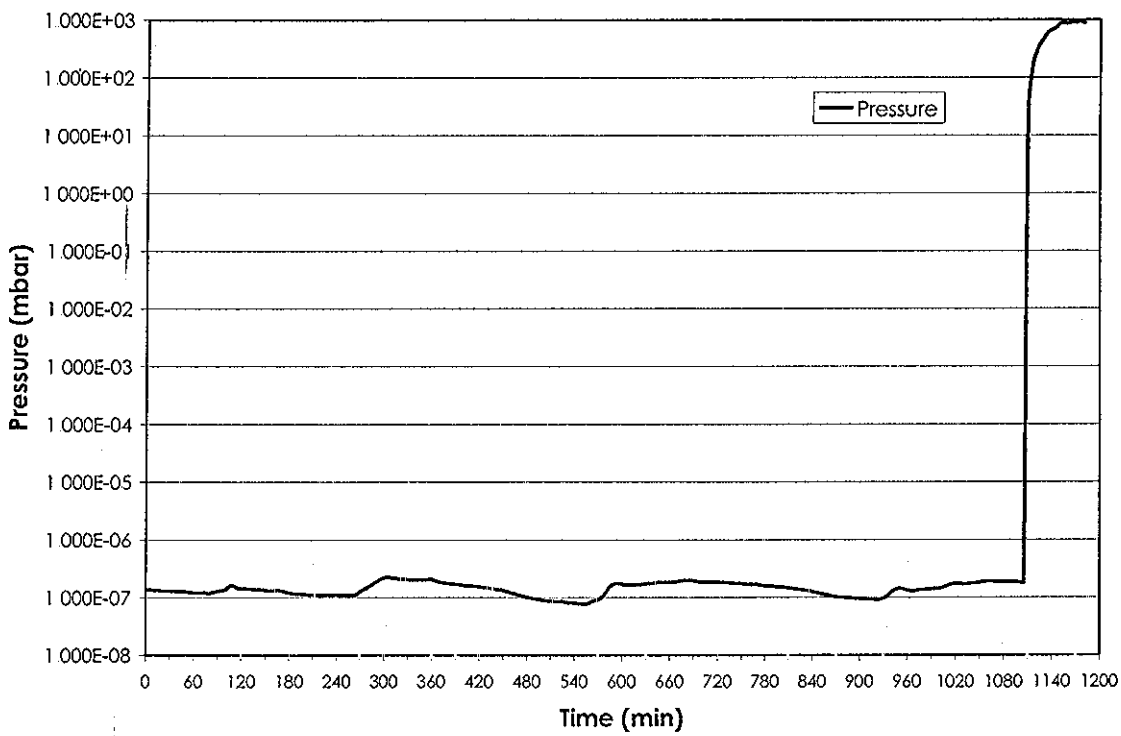

Figure 7 – Pressure profile of the chamber.

In Fig 7 the pressure profile of the TVC is showed. The pressure is very stable during the time (over a total period of about 16 hours) fluctuating between a maximum value of 1.9 10-7 mbar and a minimum

value of 7.7·10-8. According to this profile, the pressure of the chamber achieves the ambient value in about 75 minutes

The temperature range of the shroud (-70°C ÷ +125°C) was tested (see Figure 8) both with cold plates control switched on and off.

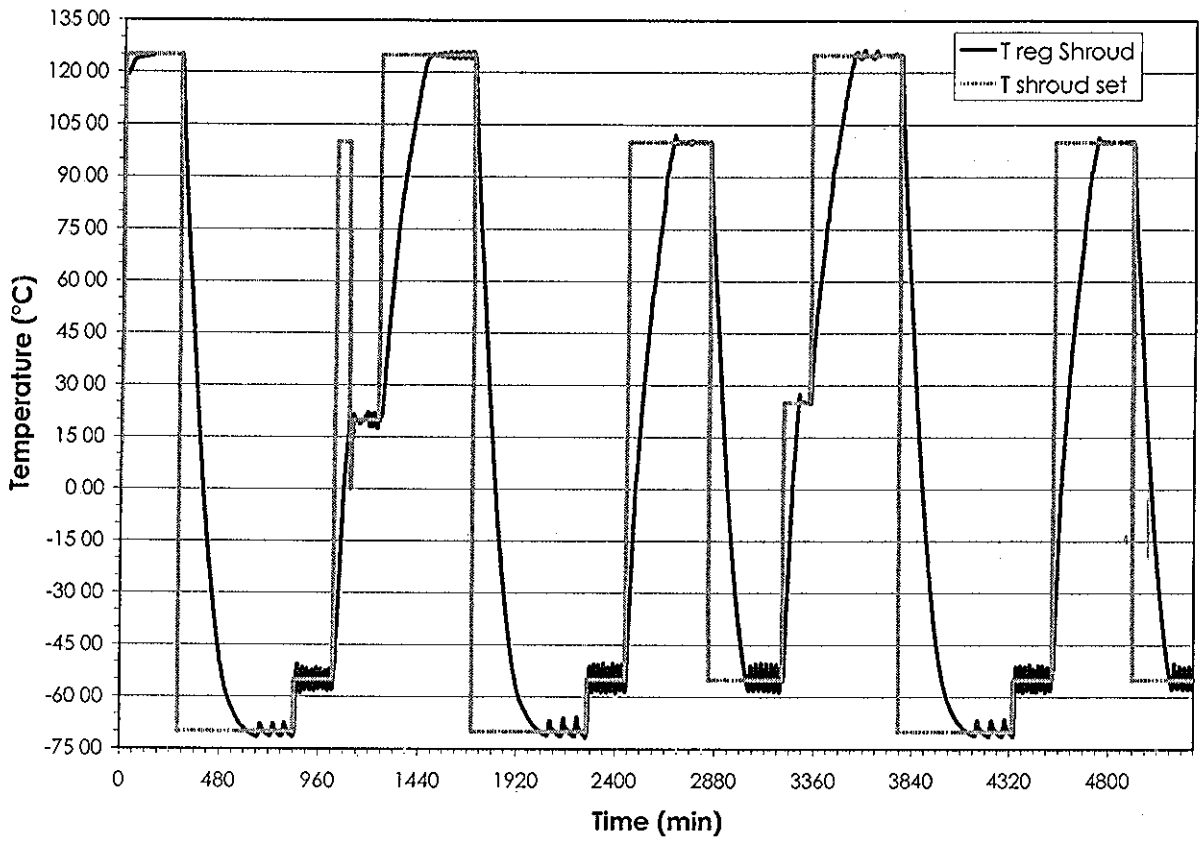

Figure 8 – Temperature range of shroud with cold plate control switched off.

To check the cold plates temperature range and the temperature gradient of the chamber, only the cold plate control was powered on. The temperature profile was set out between -20°C and +50°C. After two cycles, the shroud control was powered on. The temperature profile of the shroud followed the same profile of cold plate (see Figure 9).

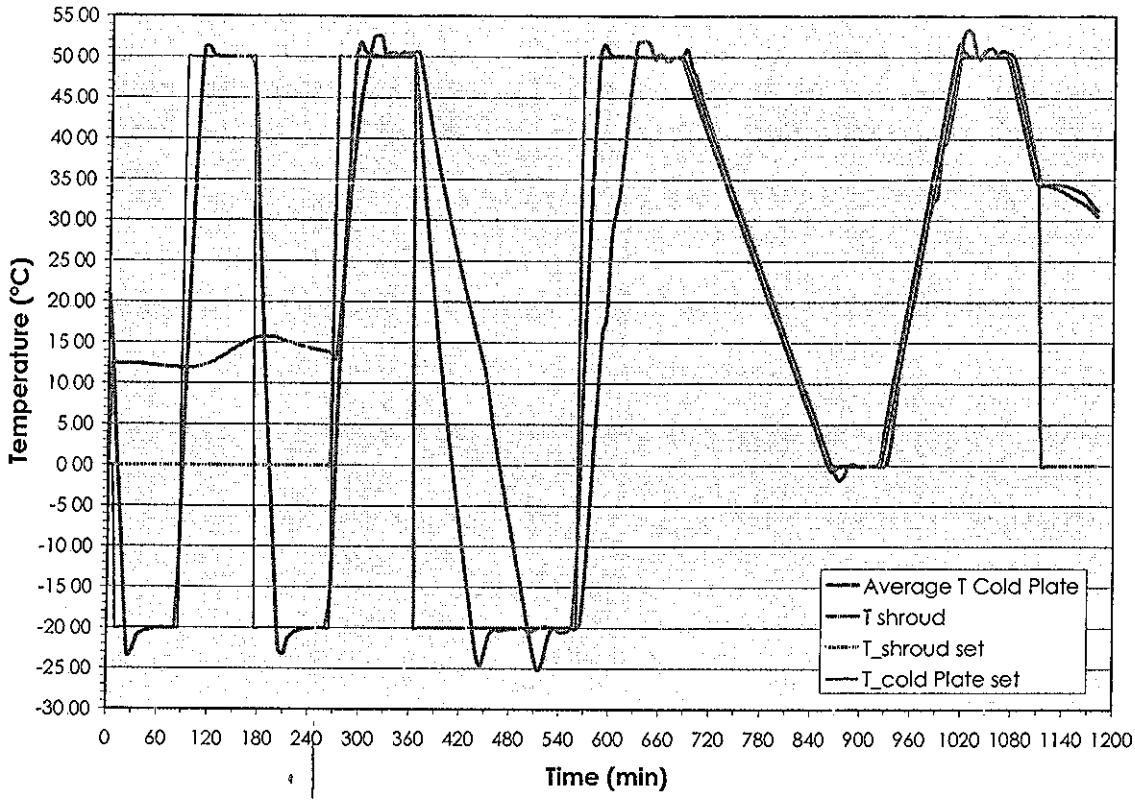

Figure 9 – Temperature profile of cold plates and shroud during the test.

As reported in the Figure 10, the temperature gradient of cold plate, with shroud control switched off, both in cooling and heating is about 2°C/min. With the shroud control switched on, the temperature gradient of cold plate is about 1°C/min in cooling and 2°C/min in heating. The difference in due to the cooling power of the chamber, smaller than the heating power.

Due to this difference, as reported in the Figure 11, the temperature gradient of shroud, with cold plates control switched on, is about 0.5°C/min in cooling and 1°C/min in heating

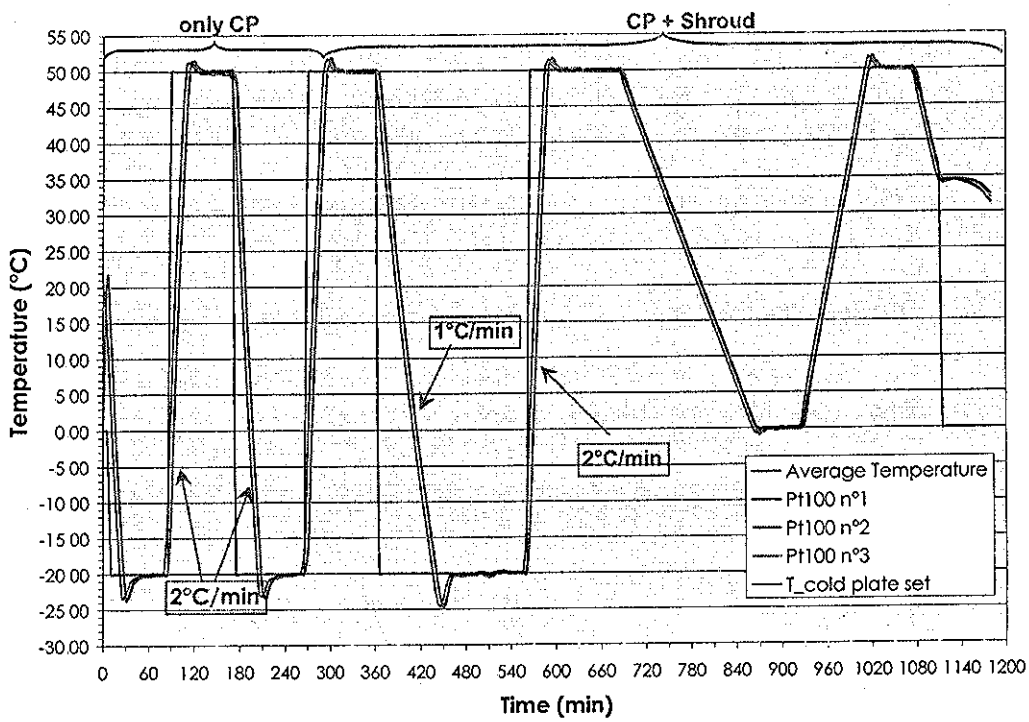

Figure 10 – Temperature profile and gradient of cold plate both without and with shroud control powered on.

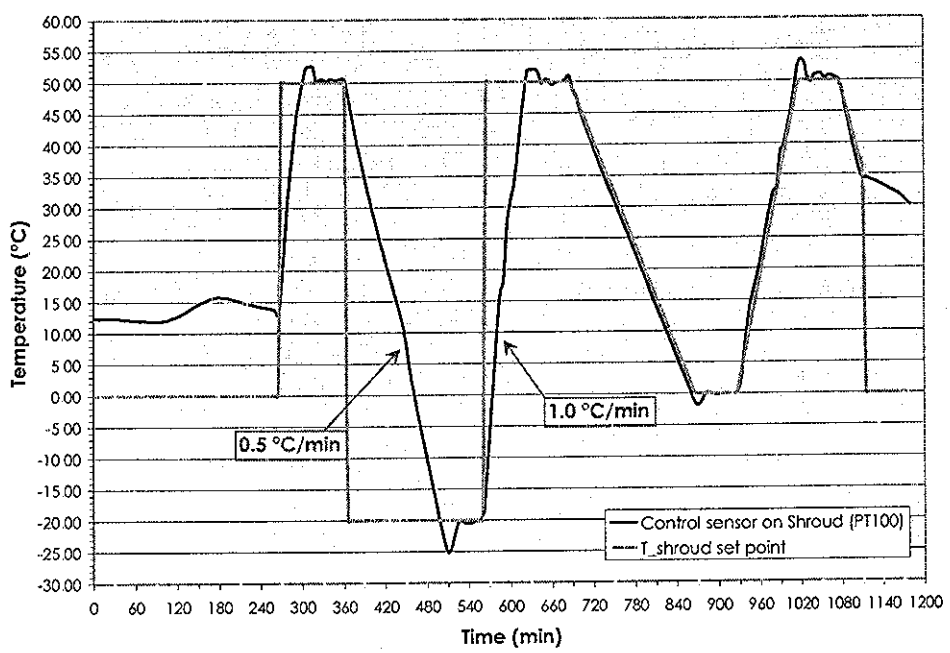

Figure 11 – Temperature profile and gradient of shroud.

Check of cold plate temperature uniformity

To check the distribution of the temperature along a cold plate, additional tests were performed. Three PT100 sensors were placed on each cold plate as showed in Figure 12.

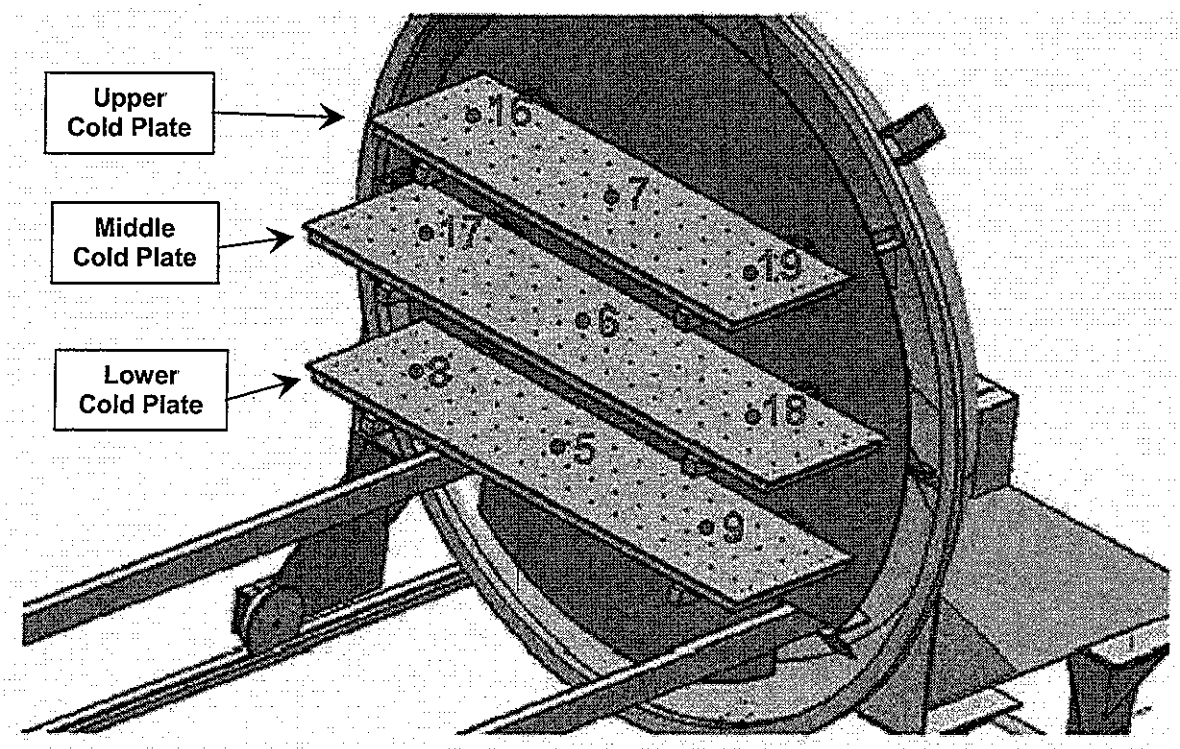

Figure 12 – PT100 sensors placed on cold plates.

The maximum temperature gradient for each cold plate was calculated.

The profile chosen is the AMS-electronics temperature profile for thermo-vacuum test (temperature range between -50°C and +90°C). Once the temperature reach the set point, then it stabilized for 5 hours. During the test, shroud control was switched on. Shroud temperature followed the cold plate temperature profile.

In the next figures the temperature profile and the maximum gradient for lower, middle and upper cold plate are showed.

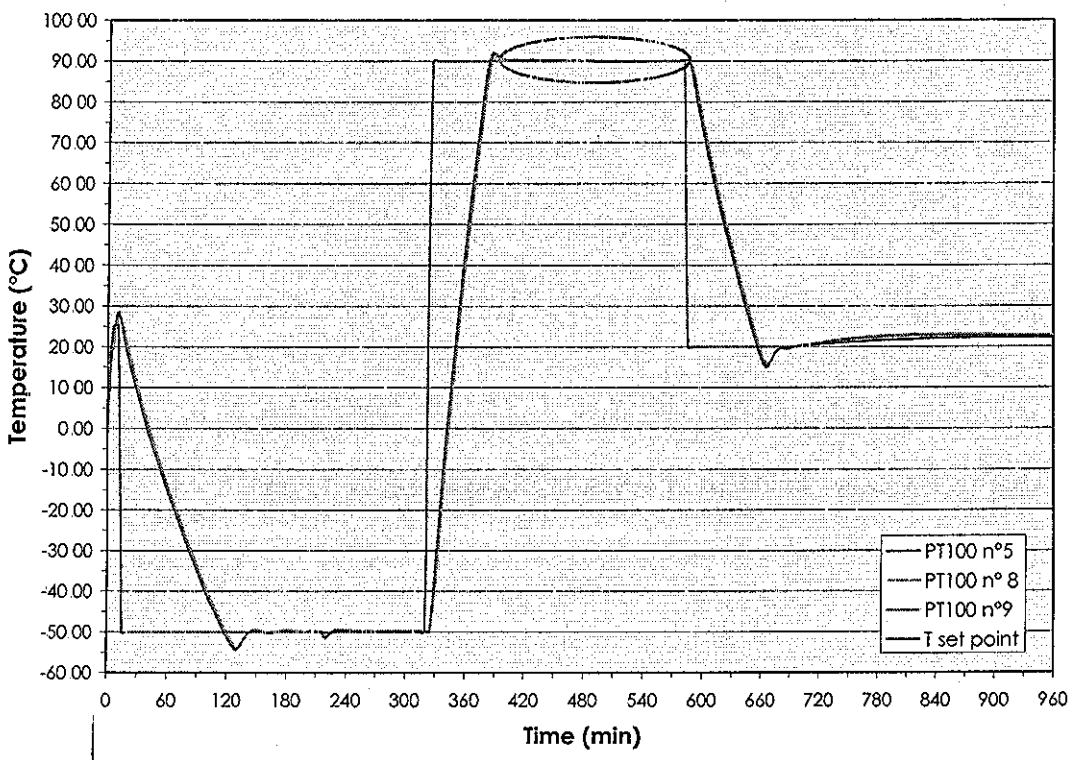

Figure 13 – Temperature profile of lower cold plate (the lightered zone is enlarged in figure 14).

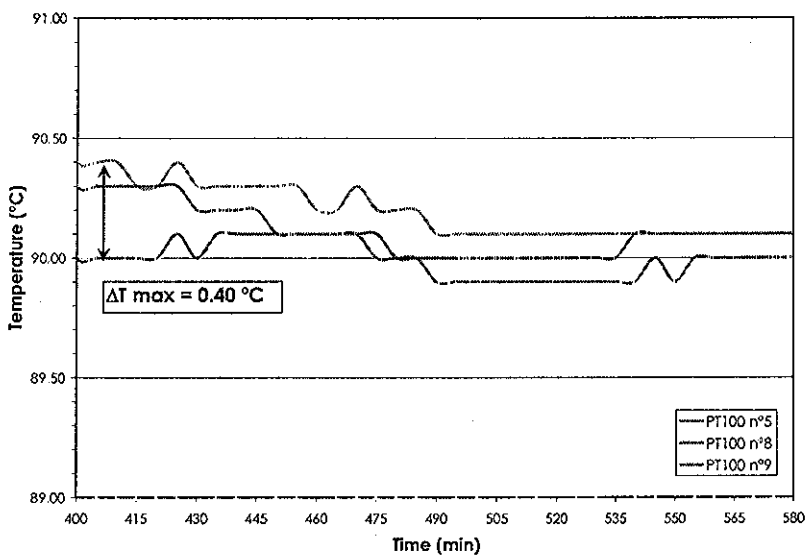

Figure 14 – Maximum temperature gradient for lower cold plate.

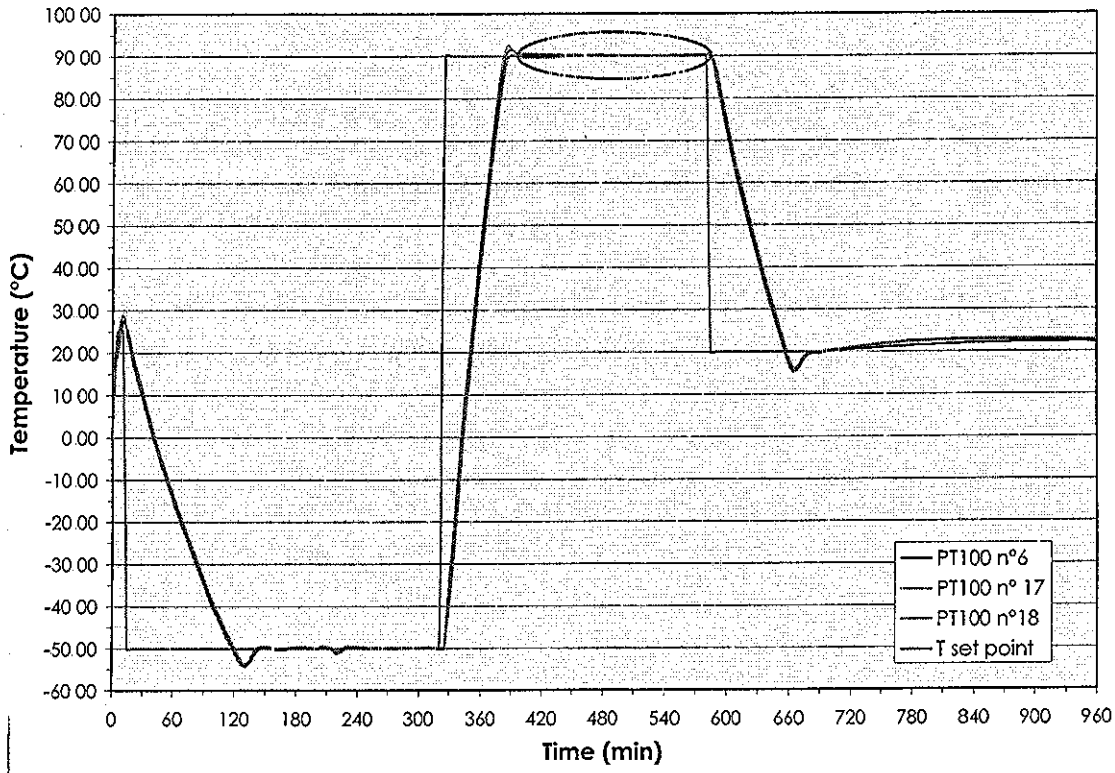

Figure 15 – Temperature profile for middle cold plate (the lightered zone is enlarged in the figure 16).

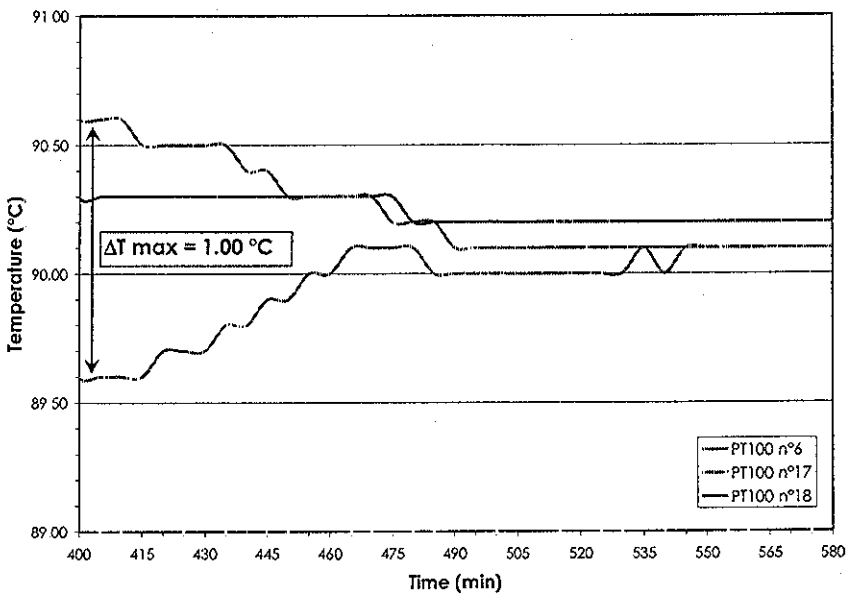

Figure 16 – Maximum temperature gradient for middle cold plate.

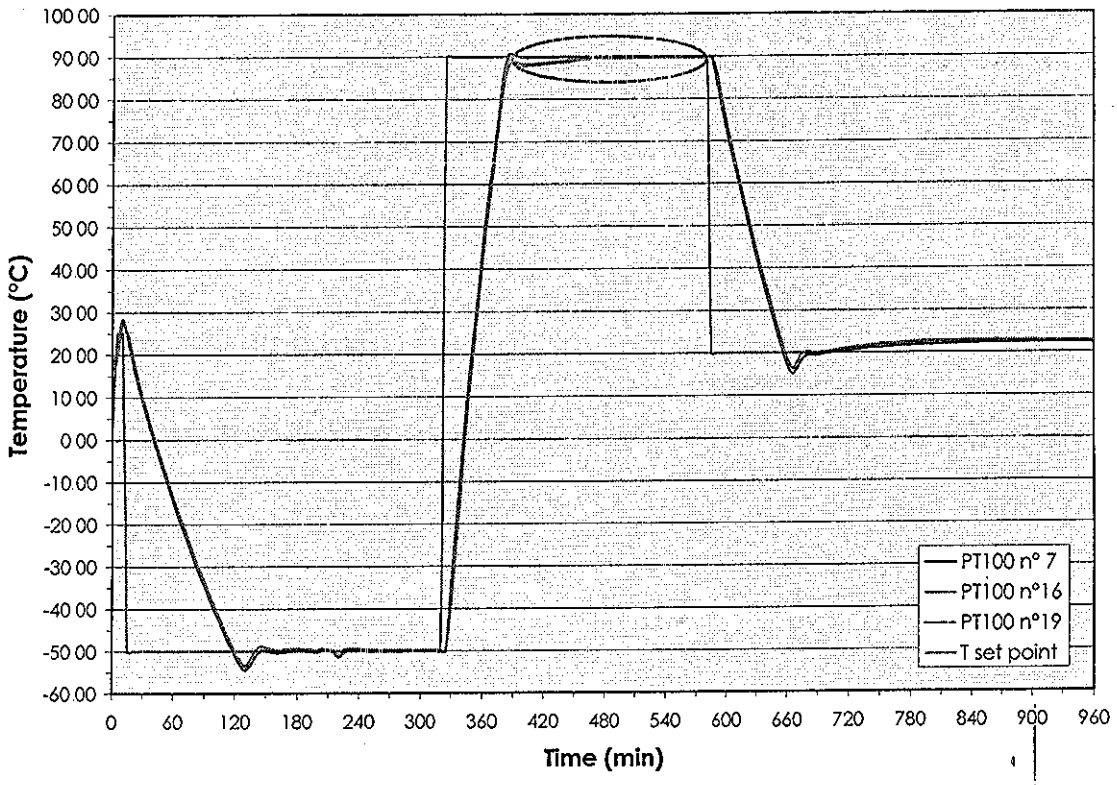

Figure 17 – Temperature profile for upper cold plate (the lightered zone is enlarged in figure 18).

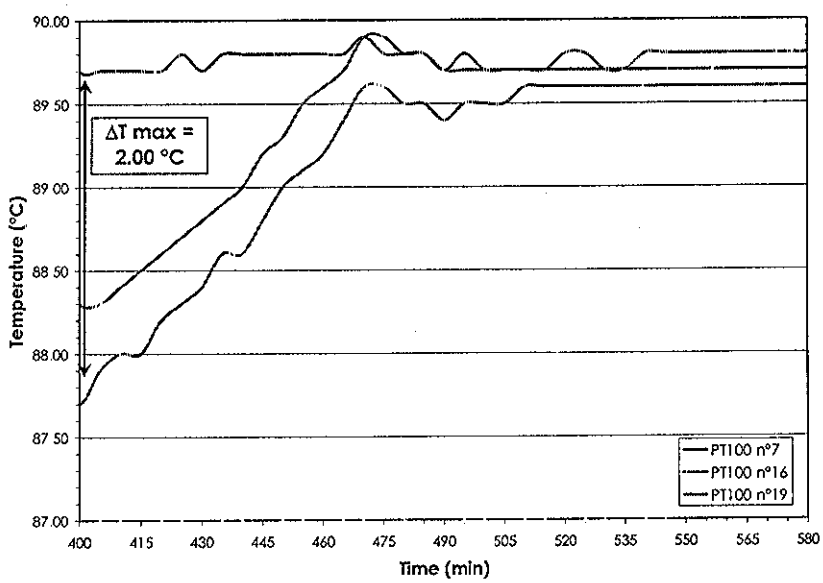

Figure 18 – Maximum temperature gradient for upper cold plate.

The maximum temperature gradient is higher for middle and upper rather than lower cold plate. It is larger during the first phase of stabilization; after one hour it goes down to 0 20°C for all cold plates.

DESCRIPTION OF THE AVAILABLE FLANGES

At the SERMS laboratory there are three **ISOK** flanges, one flange with four High Voltage pin and three flanges with four LEMO connectors each, available at the moment; all the flanges are made of stainless steel (AISI 304).

ISO K FLANGES

The ISO K flanges have a nominal diameter of 200mm and 12mm thickness. Holes have been realized on these flanges to mount SUB-D feedthrough (MIL-C-24308) as it is illustrated in the next figures.

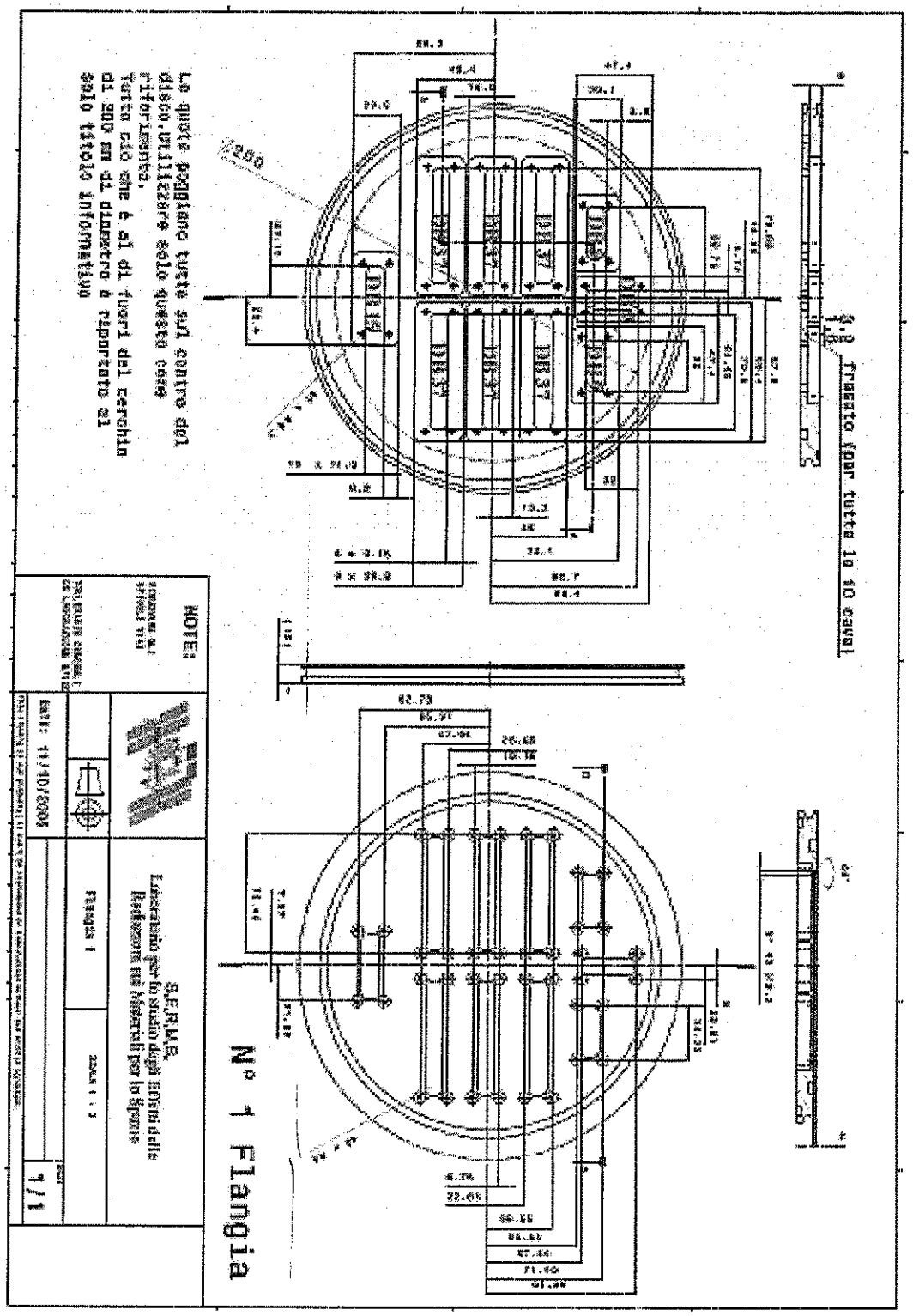
Le quote poggiano tutte sul centro del disco.Utilizzare solo questo come riferimento.
Tutto ciò che è al di fuori del cerchio di 200 mm di diametro è riportato al solo titolo informativo
NOTES:
Flangia 1
1/1
Nº 1 Flangia
Frusato (per tutta la 40 cm)

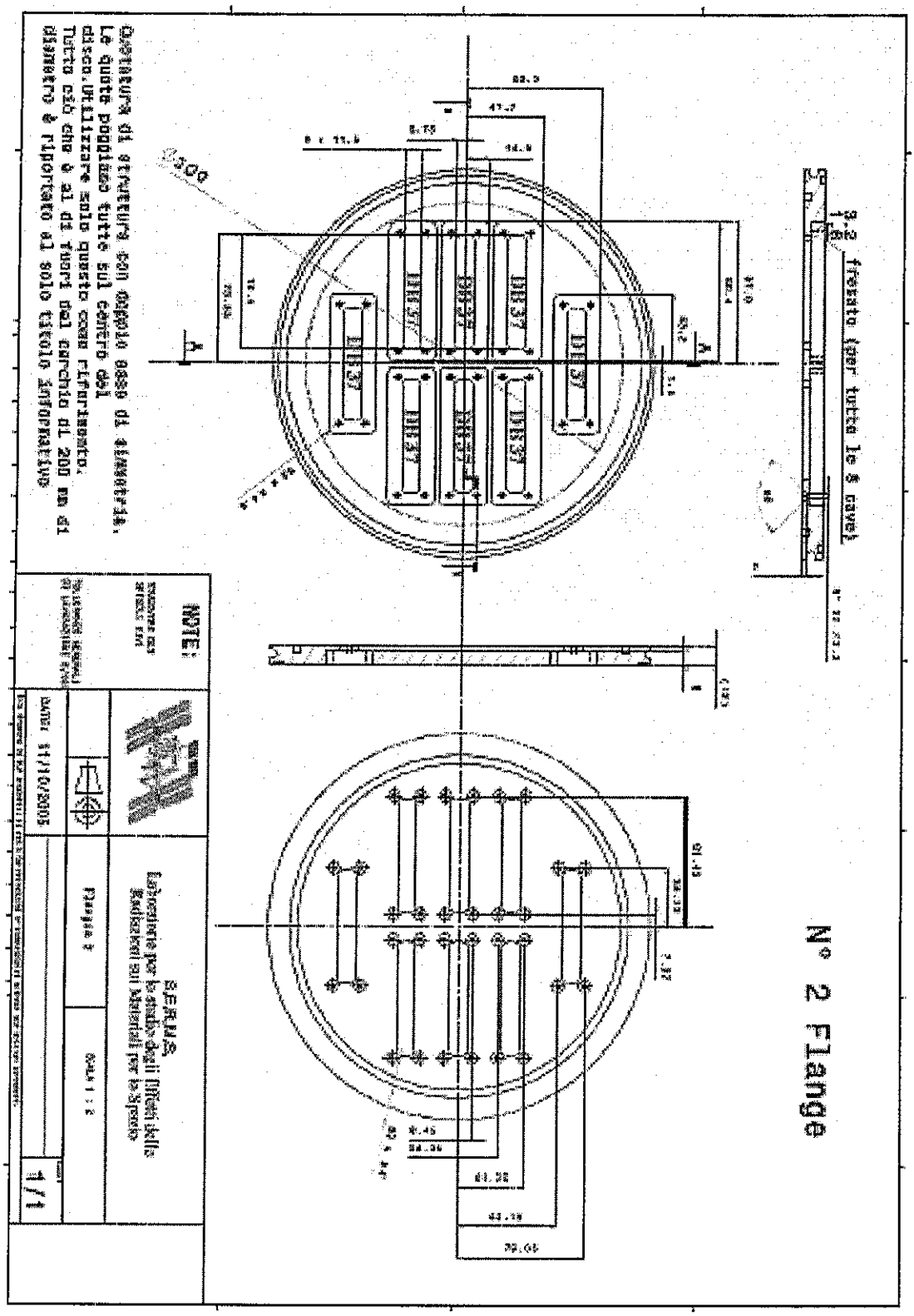
N° 2 Flange
NOTE:
SERMS
Laboratorio per lo studio degli Effetti delle Radiazioni sui Materiali per lo Spazio
Flange 2
DATA: 11/10/2005
1/1

The technical characteristics, number and dimension of the feedthroughs mounted on the different flanges are reported in the following tables and figures:

Type	# of pins	I/F type	Type of contacts	Total # of feedthrough
DB 9	9	M/F (male vacuum side)	Normal Density	3
DB 15	15	M/F (male vacuum side)	Normal Density	1
DB 37	37	M/F (male vacuum side)	Normal Density	22
			Total # of pins	856

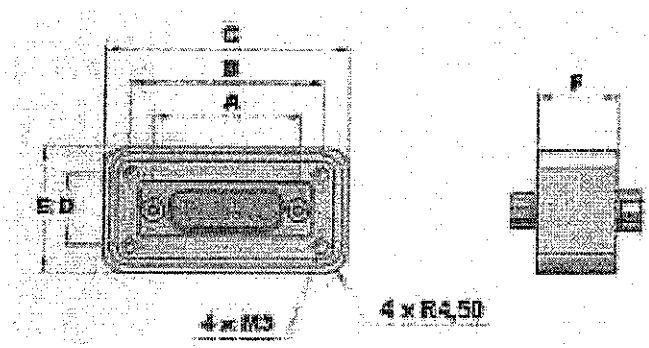

Figure 19 – Dimensions of the feedthrough.

	A	B	C	D	E	F
DB 9	24.99	34.29	46.37	16.00	28.08	18
DB 15	33.32	43.64	55.79	16.76	28.92	18
DB 37	63.50	73.46	85.38	16.90	28.82	18

N.B.: all the dimensions are in mm.

Mounting scheme and dimensions of the hole are reported in the next table and figure.

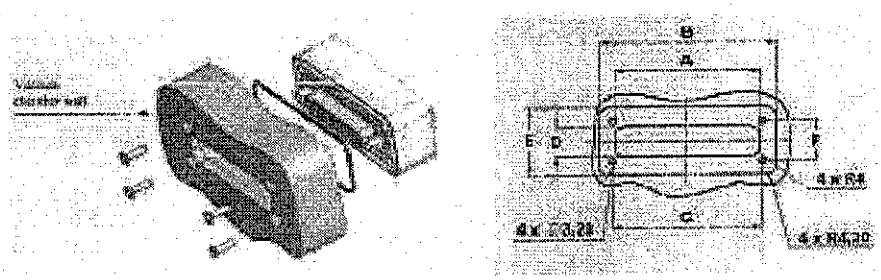

Figure 20 – Dimensions of the hole and mounting description.

	A	B	C	D	E	F
DB 9	32	47.4	34.29	11.50	29.10	16
DB 15	40.3	56.8	43.64	11.50	29.9	16.76
DB 37	70.50	86.40	73.46	11.50	29.80	16.90

N.B : all the dimensions are in mm.

MATERIALS AND FINISHES

Insulator:	Glass-filled DAP (ASTM-D-5948)
Contacts:	Precision machined high tensile copper alloy with stainless steel shrouds
Contact plating:	0 000050 inch (1.25 micron) gold over copper plate
Housing:	Aluminium alloy
O-ring:	Viton

ELECTRICAL CHARACTERISTICS

Contact Current Rating:	7.5 A (nominal value)
Initial contact resistance:	0.008 ohms maximum
Working Voltage:	1000 V.r.m.s

HIGH VOLTAGE FLANGE

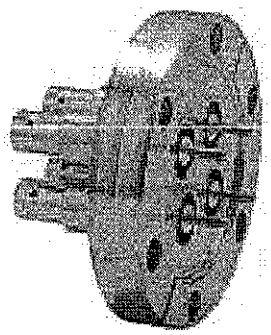

FIGURE 21 – High Voltage flange

The High Voltage flange (from CERAMASEAL) is a DN35CF flange with four SHV pins having the following characteristics.

Voltage DC	Conductor Amps	Pressure @ 20°C bar	Temperature °C Min	Max	Magnetic materials	Part number
5 kV	10	103	-269	450	yes	11179-02-CF

FLANGES WITH LEMO FEED-THROUGH

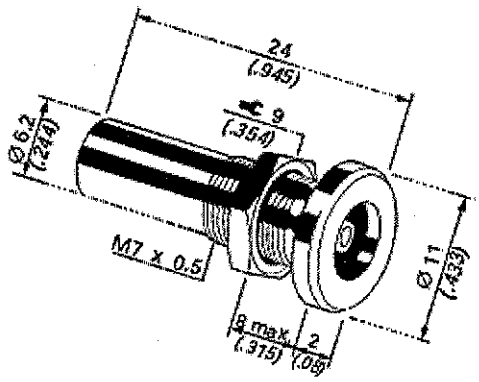

FIGURE 22 – Lemo connectors available.

There are three flanges DN35CF each of them with four LEMO feedthrough (for a total number of 12 connectors). The flanges are from CERAMASEAL while the LEMO feedthrough are from FISCHER (part number WDE 101 AA004).

DESCRIPTION OF THE AVAILABLE CONNECTORS

D-Sub connectors vacuum-side (realized according to MIL-C-24308) are available:

- n° 22 D-Sub connectors with 37 pins
- n°1 D-Sub connectors with 15 pin
- n° 3 D-Sub connectors with 9 pin

These connectors have the following characteristics:

Material:	Glass fibre reinforced polyetherimide UL94V0 with removable crimp contacts;
Current rating:	5A
Test current between contacts:	1200 V / 1 min
Insulation resistance between contacts:	> 5000 MOhm
Maximum cable size:	2.2 mm
Mating cycles:	> 500
Heat deflection limit according to DIN HDT/A:	197°C
Relative temperature index according UL 746 B:	130°C
Sub temperature limit:	- 55 °C

All the contact pins are crimp contacts. To crimp the cable the following tool are available at SERMS laboratory:

- Crimping tool M22520/2-01
- Positioner M22520/2-08
- Extraction tool M81969/1-02

To choose an adequate cable length, in the following figures the distances between the cold plates and their position respect to the flanges with the feedthrough are showed.

Minimum cable length suggested:

- 4 mt for test item placed on the lower cold plate;
- 5 mt for test item placed on the middle cold plate;
- 6 mt for test item placed on the upper cold plate

If a shorter length is needed, for a limited number of cable, it is possible to use a minimum cable length of about 2 mt (taking advantage of the holes on the shroud).

For High Voltage feedthrough there are available berillium copper contacts having the following characteristics:

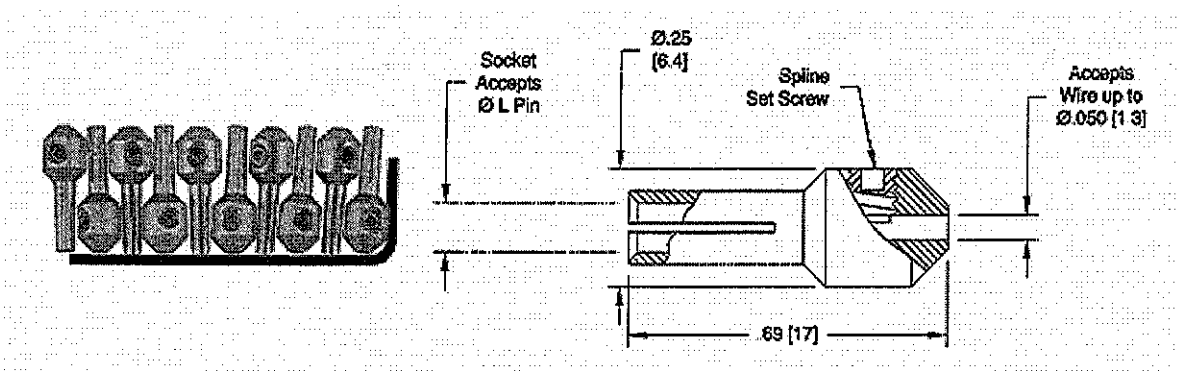

FIGURE 23 – Connectors available for High Voltage feedthrough.

Current Amps	Diameter L inches (mm)	Temperature °C Min	Max	Part Number
25	0,094 (2,4)	-200	200	7429-01-A

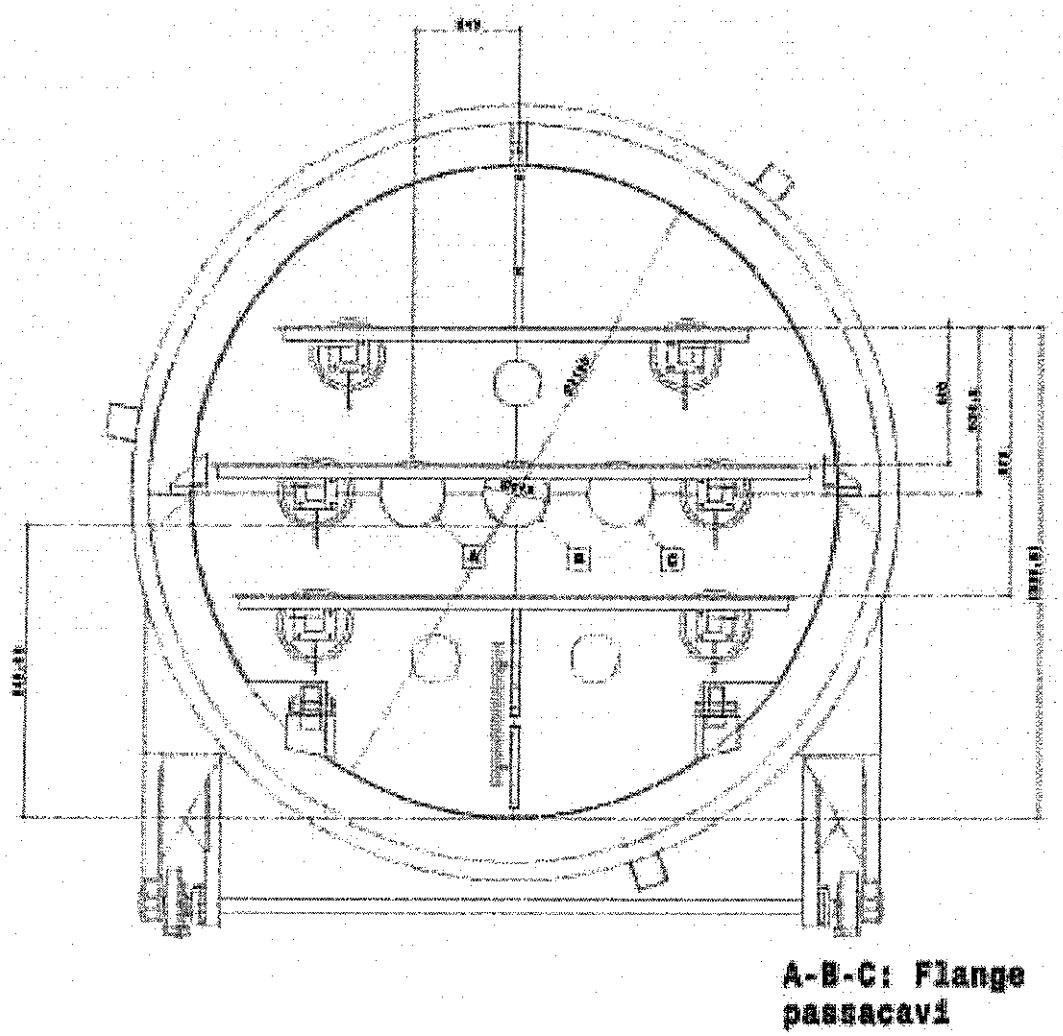

Figure 24 – Position of the cold plates respect to the flanges with the feedthrough.

DESCRIPTION OF THE AVAILABLE EQUIPMENT

At the SERMS laboratory heaters, strain gauges and PT100 sensors are available. In the following section a brief description of these sensors is reported.

Heaters

Two types of heaters are available; they differs for the electrical resistance and thus for the power that are able to dissipate.

They are all Kapton Heaters from MINCO supplier, suitable for vacuum environment (NASA-RP-1061). All the materials are NASA approved for space application (S-311-P-079).

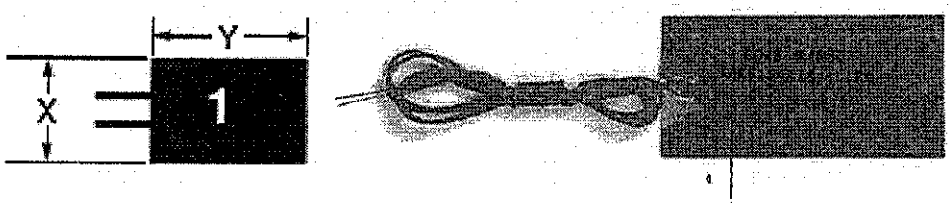

Figure 25 – Type configuration for the heaters.

In the following table the main characteristic and the number of heater available are reported.

Part #	# available	Size (mm) X	Y	Resistance In ohms	Typical power	Effective area (in^2)	Lead AWG
HK5167R264L12A	2	25.4	254	264	50 W at 115 V	8.96	30
HK5165R52.3L12A	4	25.4	76.2	52.3	15 W at 28 V	2.70	30

Strain Gauges

A total amount of 20 bidirectional (0°-90° T rosette) strain gauges (from HBM supplier-part # 1-XY31-3/120) are available. They have the following characteristics:

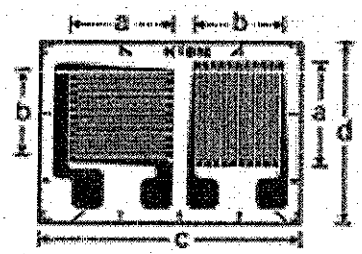

Figure 26 – Size of the strain gauges.

- **Dimensions (mm) (see figure above)**

  Measuring grid

  a = 3

  b = 2 8

  Measuring grid carrier

  c = 10 5

  d = 8

- **Strain Gauges construction:**

  Measuring grid
  Material Constantan foil

  Carrier
  Material polyimide
  Thickness 45 ±10 μm

  Cover
  Material polyimide
  Thickness 25 ± 5 μm

- **Nominal resistance** 120 Ohms
- **Gage factor** approx. 2
- **Gage factor tolerance** ± 1 %
- **Temperature response matched to steel** 10 8 · 10^{-6} / K
- **Max. perm. Effective bridge excitation voltage** 11 V
- **Operating temperature range**

  For absolute, i.e. zero point related measurements -70 ÷ 200 °C

  For relative, i e not zero point related measurements -200 ÷ 200 °C

Temperature sensors (PT100)

A total amount of 50 PT100 test temperature sensors (from MINCO supplier – part # S249PD12) are available. All PT100s have 100±0.12% ohm platinum element; here there are the main characteristics of these sensors:

- Material	Ceramic/glass body, silver leads
- Dimensions	0.08" × 0.09" (2.0 × 2.3 mm)
- Thickness	1.4 mm
- Temperature range	-70 to 400°C
- Sampling frequency	0.008 Hz with 64 sensors (1 acquisition every 128 sec) 0.01 Hz with 50 sensors (1 acquisition every 100 sec)

Temperature controller

One temperature controller is available (Watlow supplier – part # PDD1-CCCC-1AAA) to control the heaters temperature variation during the test. This controller has a dual channel input (PT100 sensors) and four output channel for the heaters. The guarantee temperature stability is ± 0.1 °C/°C, while the update rates are 10 Hz for both input and output. Together with this controlled, four SSR can be used (supplier Watlow – n° 2 part # SSR-240-10A-DC1 – n° 2 part # SSR-100-20A-DC1).
Two of them are able to control a maximum current value of 10A, with an output tension of 120/240 vdc/vac, the other a maximum current of 20A with an output voltage from 0 to 100 vdc.

Cho-Term - Thermally conductive elastomer insulator

A roll 74,2mm x 122 mt without adhesive of Cho-Term 1674 (from Chomerics) is available (part # 64-40-0300-1674). It is an aluminium oxide-filled silicone elastomer designed for applications which require good heat transfer performance and moderate electrical isolation characteristics. It is reinforced with fibreglass cloth to provide maximum resistance to tear, cut-through and punctures due to burrs and other mating surface irregularities. Using this insulator both a good heat flow from the device to the metal heat sink and electrical isolation of the device from the metal heat sink can be achieved. This insulator has a thickness of 0.25 mm (0,01 inch), a thermal impedance of 2.6 °C – cm^2/W, a thermal conductivity of 1.0 W/m K and an operating temperature range from -60°C to 200°C.