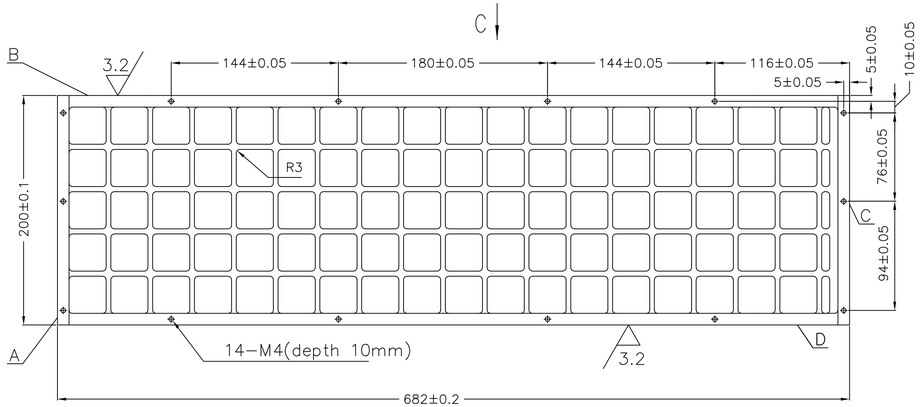

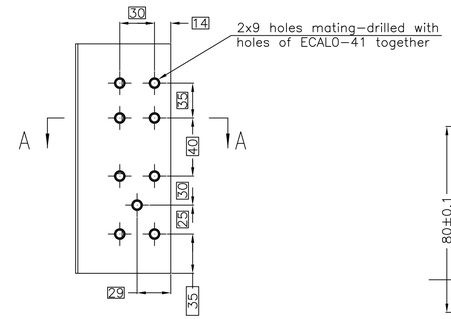

B−B (2:1)

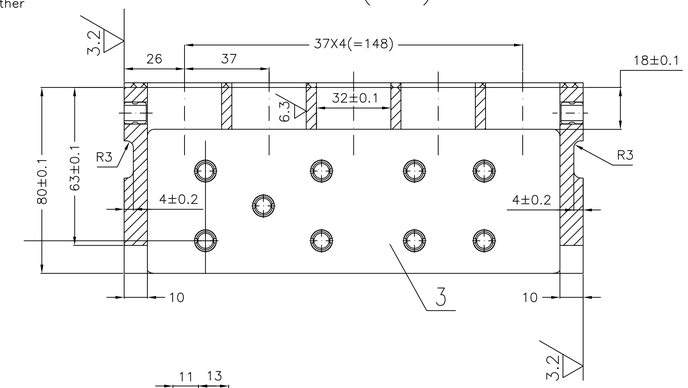

A−A Rotate
(2:1)

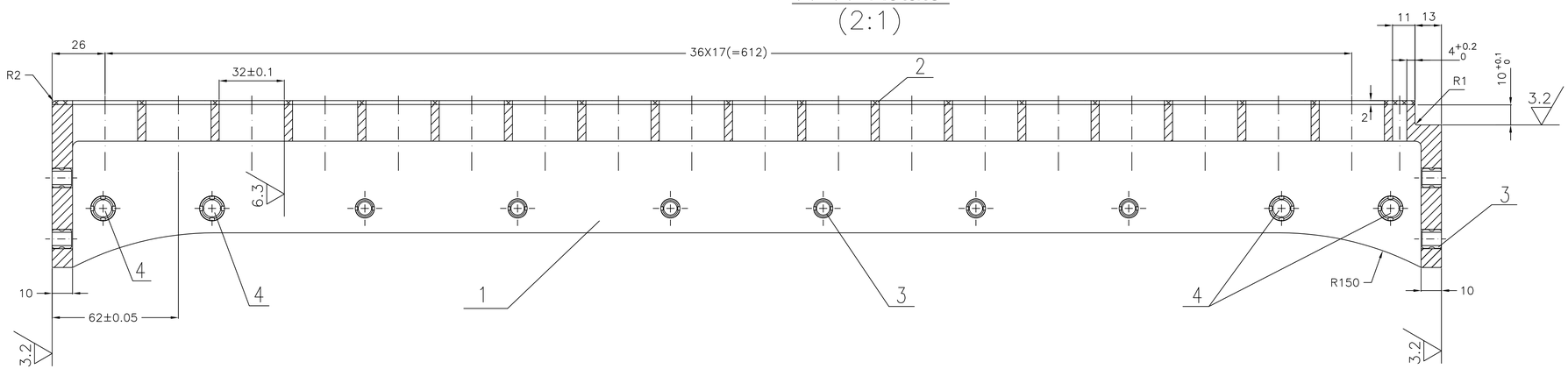

C View (5:1)

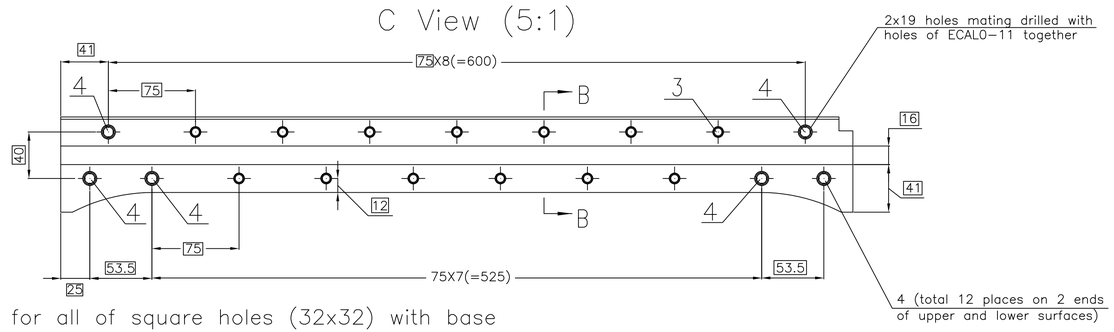

ITEM	PART NUMBER	DESCRIPTION	QTY	NOTE
6				
5				
4	MS51830−203L	Insert	12	
3	MS51830−202L	Insert	44	
2	ECAL 0−32−E	Spring Foam	1	2mm
1	ECAL 0−31W	Side Frame 2	1	

1. D.Y GF;
2. The position tolerance for all of square holes (32x32) with base plane A and B: ±0.1;
3. Label; part number; inspection mark;
4. roughness on the rest: 6.3;
5. Planeness of A and C: 0.05mm; Planeness of B and D: 0.1mm;
6. Glue between Side Panel and Spring Foam can select silica sol binder;
7. After Glueing, not allow the Spring Foam cover beyond the size of Side Panel or Square Hole (32x32);
8. The hole for mounting Insert MS51830−202L, as ø7;
   The hole for mounting Insert MS51830−203L, as ø8.5;
9. When mounting Insert MS51830−203L, possible filing could be done on the end surface of inserts, in order to fit the planeness of square holes of Side Panel.
10. All inserts shall be wet installed using only Super Koropon Primer Base (515−700);

CHNG MK	CHNG LST	SIGNATURES	DATE
DESIGNED BY	JG Tang		27/07/2004
CHECKED BY	N Li		27/07/2004
REVIEWED BY	HL Zhuang		29/07/2004
APPROVED BY	HS Chen		30/07/2004

IHEP, Beijing

ECAL 0−0−E — ASSEMBLY NUMBER
2 — QTY

Side Panel 2

LD10 GB/T3191−1998 I−QJ502−89 (ANSI 2014)

AMS−02

ECAL 0−30−E
(30/07/2004)

PHASE MARK	MASS	SCALE

TOTAL PAGES | PAGE NO.