Roughness	6.3
Sharp edge	0.5
Inner Angle	R≈5

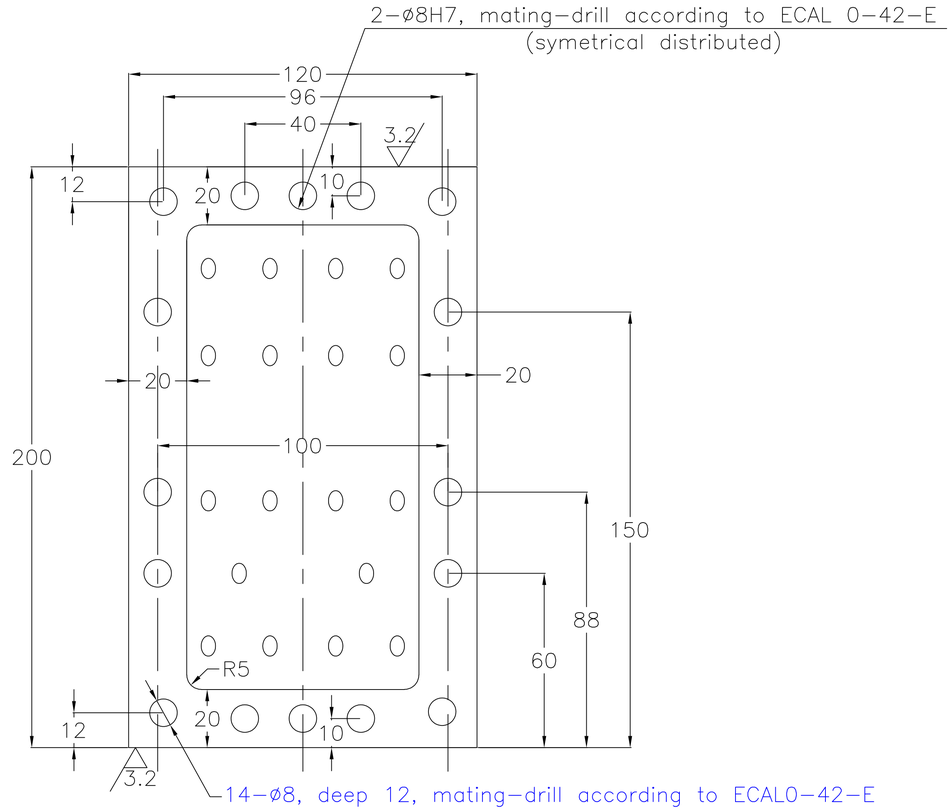

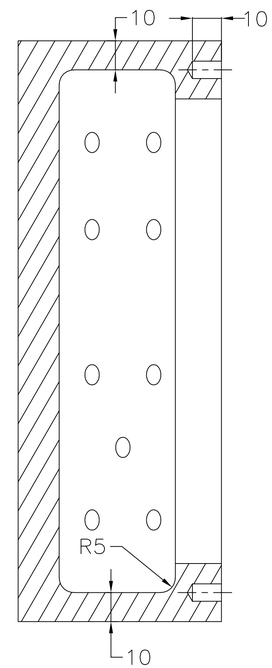

B View

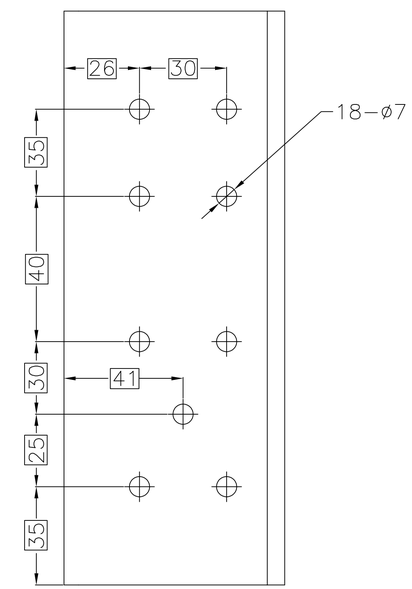

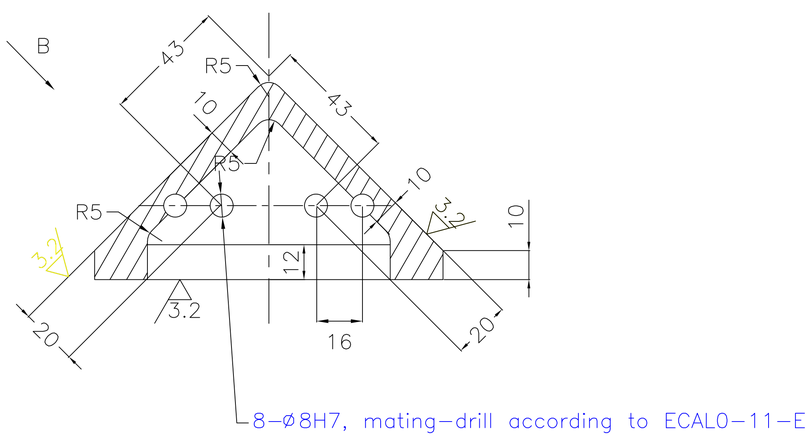

1. D.Y.GF ;
2. Label; part number; Inspection marks;
3. Precision of Dimensions in B view by processing jigs;
4. Holes for mounting Inserts: NAS51830-202L as ø7,
   NAS51830-203L as ø8.

				ECAL 0-40-E	1
				ASSEMBLY NUMBER	QTY
CHNG MK	CHNG LST	SIGNATURES	DATE	Bracket	
DESIGNED BY	JG Tang		27/07/2004		
CHECKED BY	N. Li		27/07/2004		
REVIEWED BY	HL Zhuang		29/07/2004		
APPROVED BY	HS Chen		30/07/2004	AL 7050	

IHEP, Beijing

AMS-02

ECAL 0-41-E
(30/07/2004)

PHASE	MARK		MASS	SCALE

TOTAL PAGES: PAGE NO.: