Roughness	6.3
Sharp edge	0.5
Inner Angle	R≈3

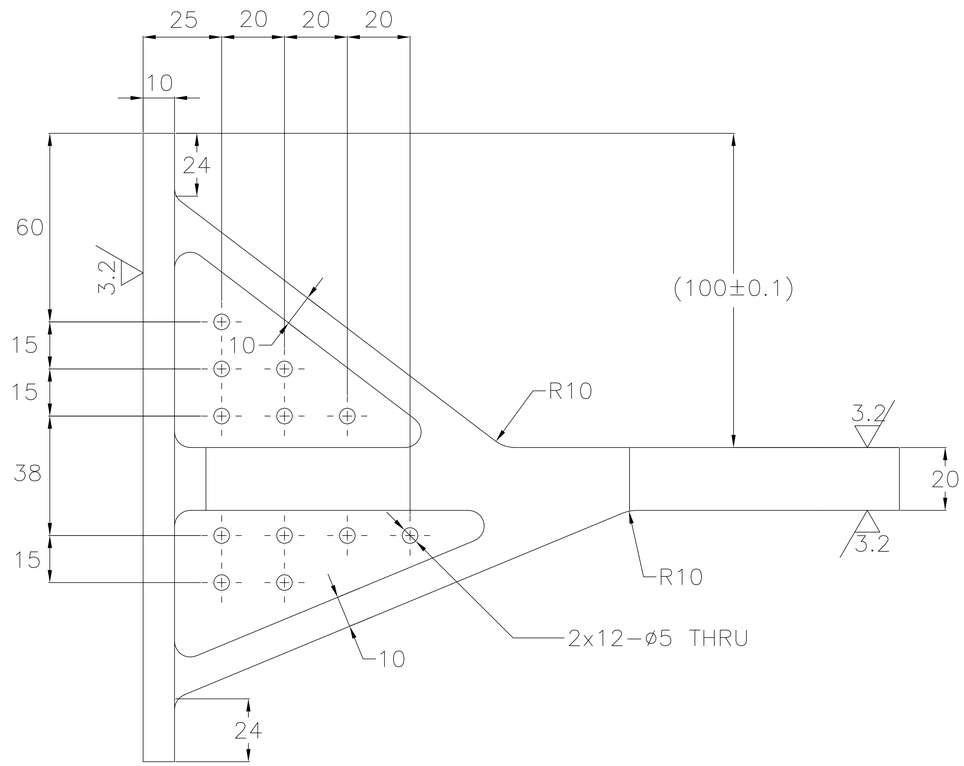

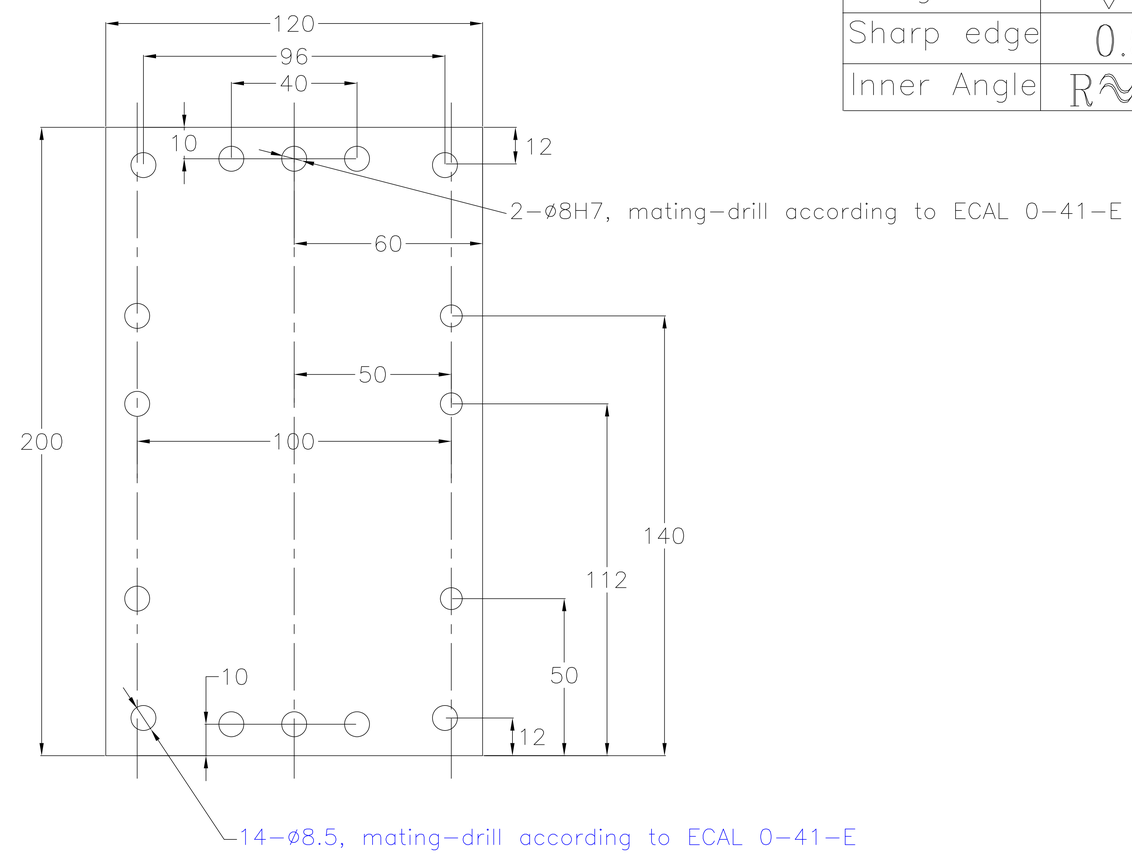

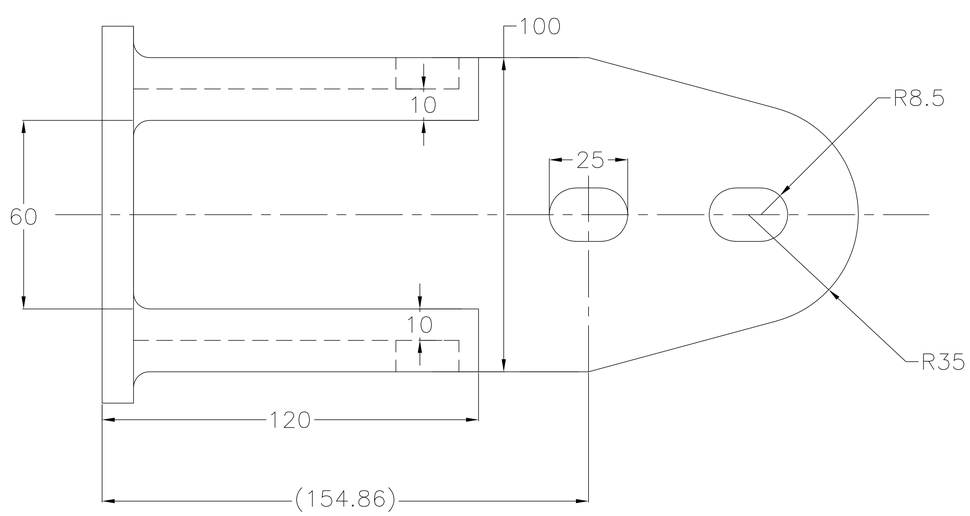

1. D.Y.GF ;
2. Label; part number; inspection mark;
3. Dimensions of Long Hole 2−25XR8.5 by processing jigs;
4. Other round angle: R5.

				ECAL 0−40−E	1
				ASSEMBLY NUMBER	QTY
CHNG MK	CHNG LST	SIGNATURES	DATE	Support	
DESIGNED BY	JG Tang	27/07/2004			
CHECKED BY	N. Li	27/07/2004			
REVIEWED BY	HL Zhuang	29/07/2004			
APPROVED BY	HS Chen	30/07/2004			
IHEP, Beijing				AL 7050	

AMS−02

ECAL 0−42−E
(30/07/2004)

PHASE MARK	MASS	SCALE

TOTAL PAGES: PAGE NO.: