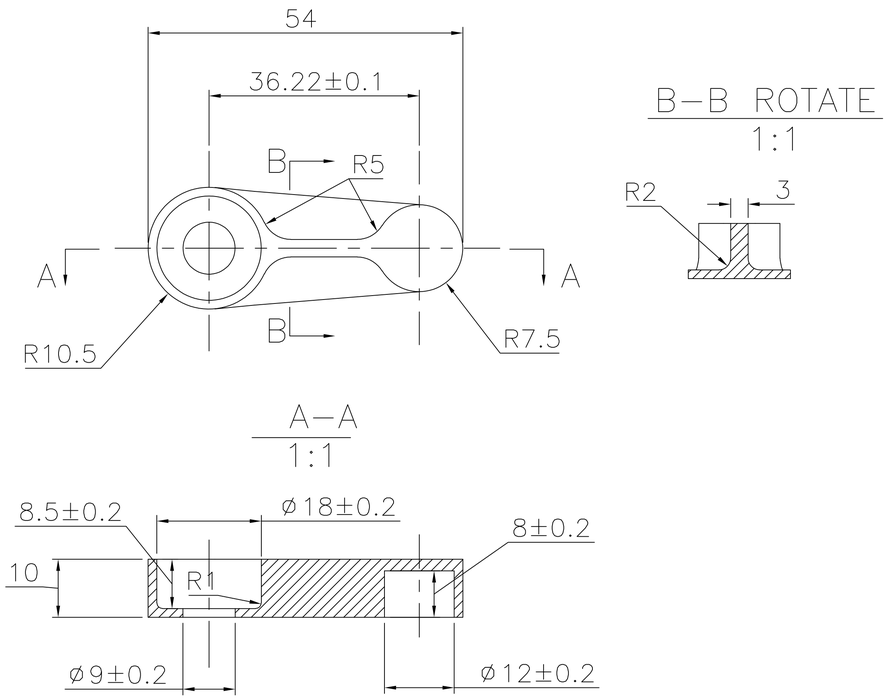

1. Solution hardening;
2. Wall thickness: $1.5^{+0.2}_{0}$ mm;
3. Other degree of roughness: 6.3

				ECAL 0–0–E	16	AMS–02
				ASSEMBLY NUMBER	QTY	
CHNG MK	CHNG LST	SIGNATURES	DATE	COVER		ECAL 0–L1–E (30/07/2004)
DESIGNED BY	JG Tang		27/07/2004			
CHECKED BY	N. Li		27/07/2004			
REVIEWED BY	HL Zhuang		29/07/2004			PHASE MARK / MASS / SCALE
APPROVED BY	HS Chen		30/07/2004	Steel, 1Cr18Ni9Ti GB/T4237–92		
IHEP, Beijing						TOTAL PAGES: PAGE NO.:

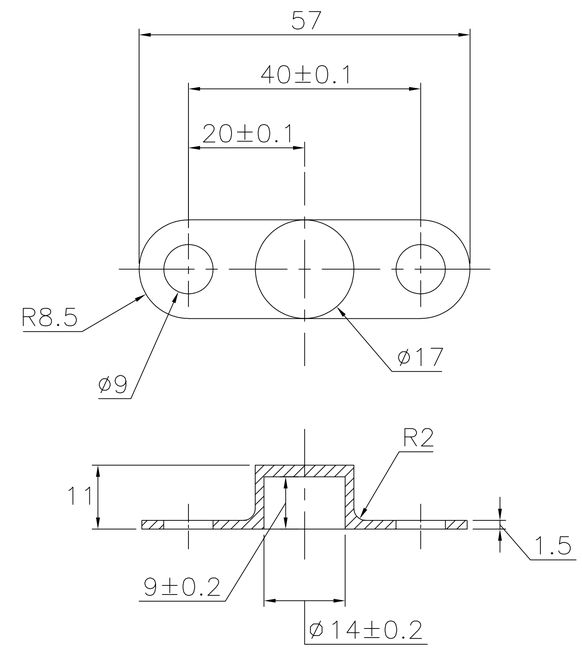

1. Solution hardening;
2. Wall thickness: $1.5^{+0.2}_{0}$ mm;
3. Other degree of roughness: 6.3

				ECAL 0–0–E	8	AMS–02
				ASSEMBLY NUMBER	QTY	
CHNG MK	CHNG LST	SIGNATURES	DATE	COVER		ECAL 0–L2–E (30/07/2004)
DESIGNED BY	JG Tang		27/07/2004			
CHECKED BY	N. Li		27/07/2004			
REVIEWED BY	HL Zhuang		29/07/2004			PHASE MARK / MASS / SCALE
APPROVED BY	HS Chen		30/07/2004	Steel, 1Cr18Ni9Ti GB/T4237–92		
IHEP, Beijing						TOTAL PAGES: PAGE NO.: