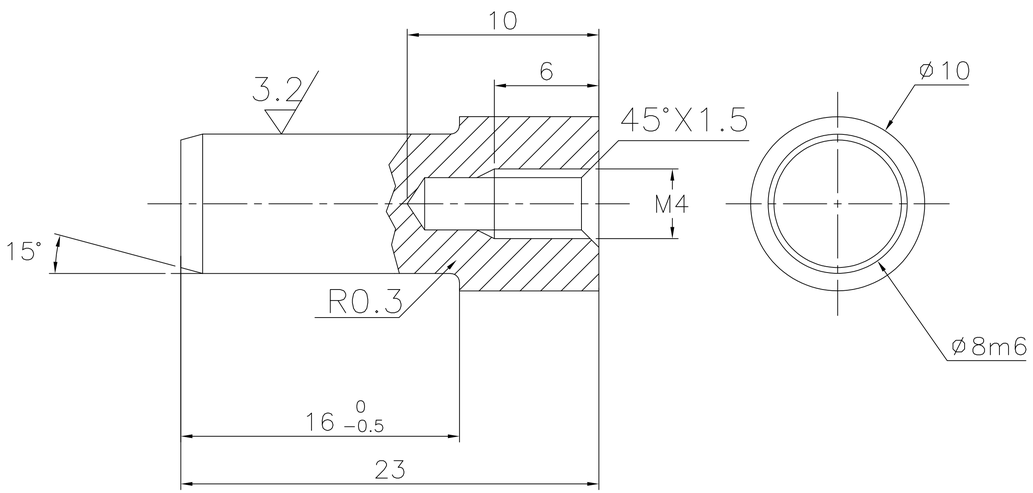

1. Solution hardening;
2. Other degree of roughness: 6.3

				ECAL 0-0-E	16
				ASSEMBLY NUMBER	QTY
CHNG MK	CHNG LST	SIGNATURES	DATE	Shear Pin (8x23)	AMS-02
DESIGNED BY	JG Tang		27/07/2004		ECAL 0-P1-E (30/07/2004)
CHECKED BY	N. Li		27/07/2004		
REVIEWED BY	HL Zhuang		29/07/2004		PHASE MARK / MASS / SCALE
APPROVED BY	HS Chen		30/07/2004		
IHEP, Beijing				Steel, 1Cr18Ni9Ti GB702-86 / GJB2294-95	TOTAL PAGES: PAGE NO.:

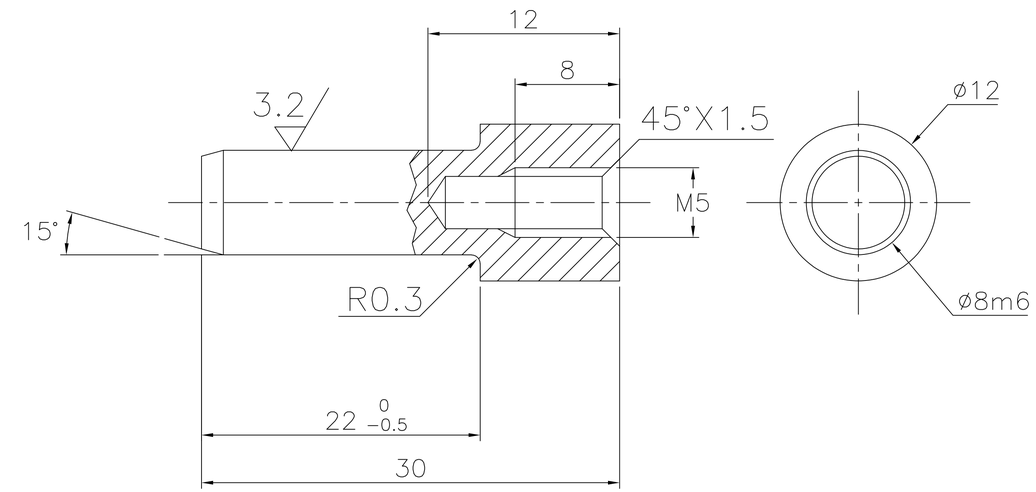

1. Solution hardening;
2. Other degree of roughness: 6.3

				ECAL 0-0-E	8
				ASSEMBLY NUMBER	QTY
CHNG MK	CHNG LST	SIGNATURES	DATE	Shear Pin (8x30)	AMS-02
DESIGNED BY	JG Tang		27/07/2004		ECAL 0-P2-E (30/07/2004)
CHECKED BY	N. Li		27/07/2004		
REVIEWED BY	HL Zhuang		29/07/2004		PHASE MARK / MASS / SCALE
APPROVED BY	HS Chen		30/07/2004		
IHEP, Beijing				Steel, 1Cr18Ni9Ti GB702-86 / GJB2294-95	TOTAL PAGES: PAGE NO.: