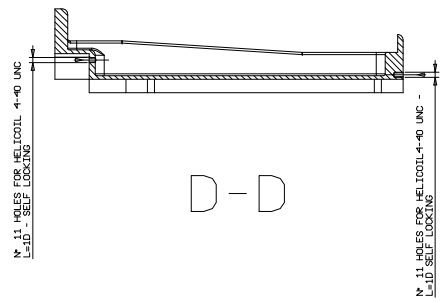

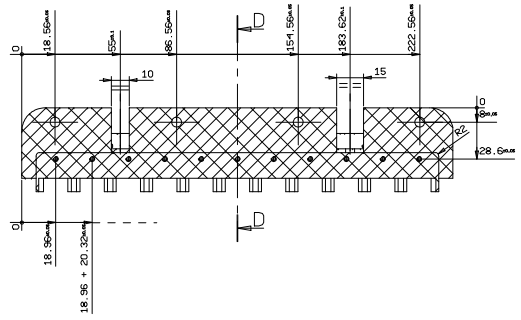

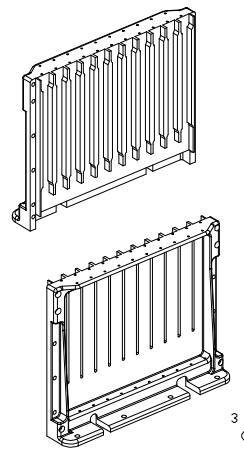

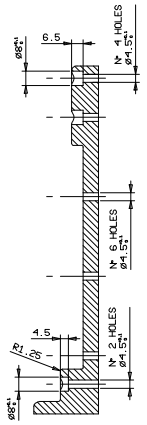

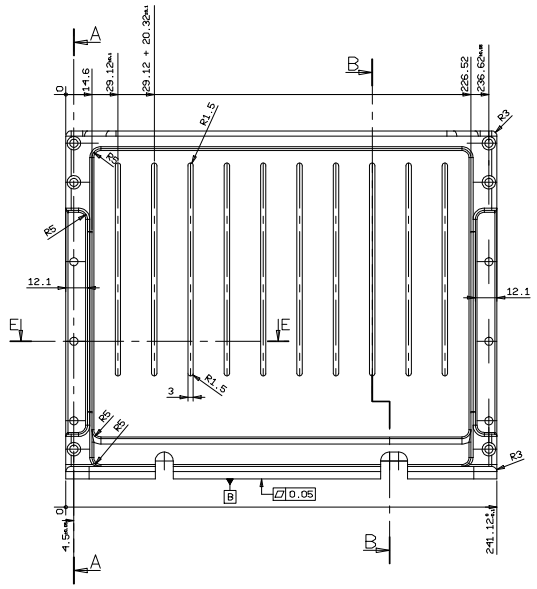

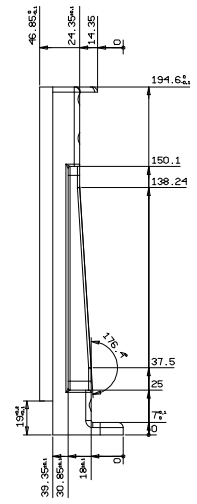

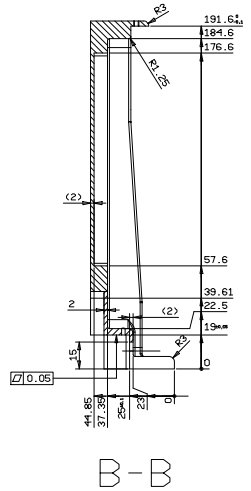

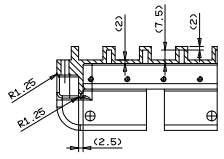

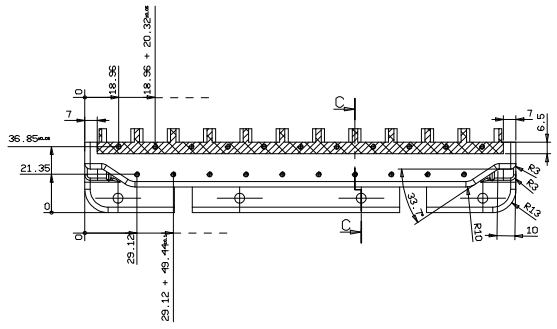

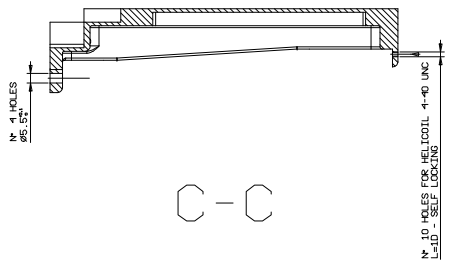

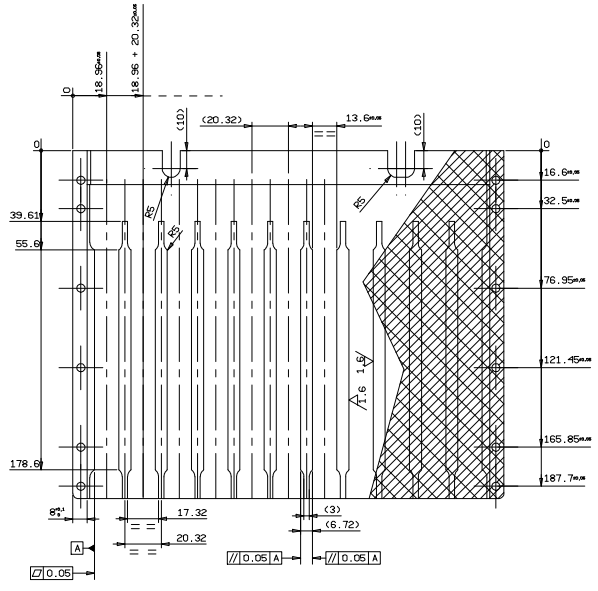

NOTES:
- MATERIAL : AL ALLOY 7075 T7351 SPEC. QQ-A-250/12
- GENERAL SURFACE TREATMENT : SURFACE TO BE PAINTED WITH SG121FD WHITE PAINT ACC. TO MAP DATA SHEET RS127
- LOCAL SURFACE TREATMENT : ALODINE 1200 SPEC. MIL-C-5541 CLASS 3
- REMOVE BURRS AND BREAK SHARP EDGES 1X45° ACC. TO DIN 6784
- HELI-COIL INSERTION DIRECTION
- INSERT HELI-COIL ACC. TO SPEC. GD-PR-CGS-060
- INSERT HELI-COIL AFTER SURFACE TREATMENT

REV	DATE	DRAWN	CHECK	ENG.	PR. ASS.	C. of C.	CHANGE AUTHORITY
/	13/07/2004	HIGHFTECH					

CUSTOMER ID

EFFECTIVITY

CARLO GAVAZZI SPACE

DRAWING TITLE
AMS 02 - CRATES
E CRATE MAIN WALL LOWER
(ECRATE)

SCALE 1:2

GEN. TOL. F 150 2768 T1

GEN. RA. 3.2

HIGHER ASSEMBLY 24-AMS-110.00.10

DRAWING NUMBER 24-AMS-110.03.10

SHEET 1 OF 1

FILE DRAWING: E_CRATE_MAIN_WALL_LOWER

All information contained in this document are property of CARLO GAVAZZI SPACE.
All rights reserved.