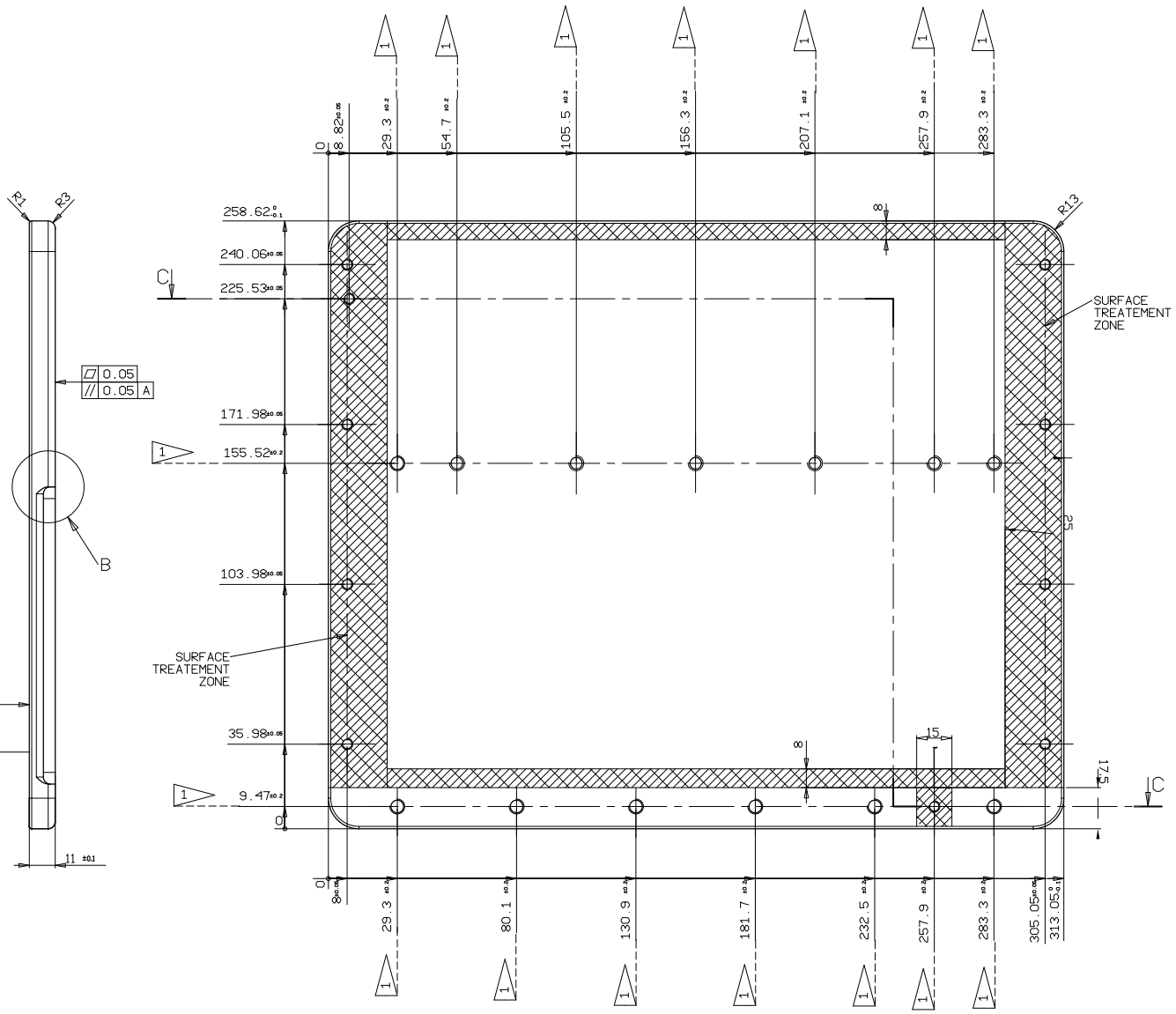

B–B

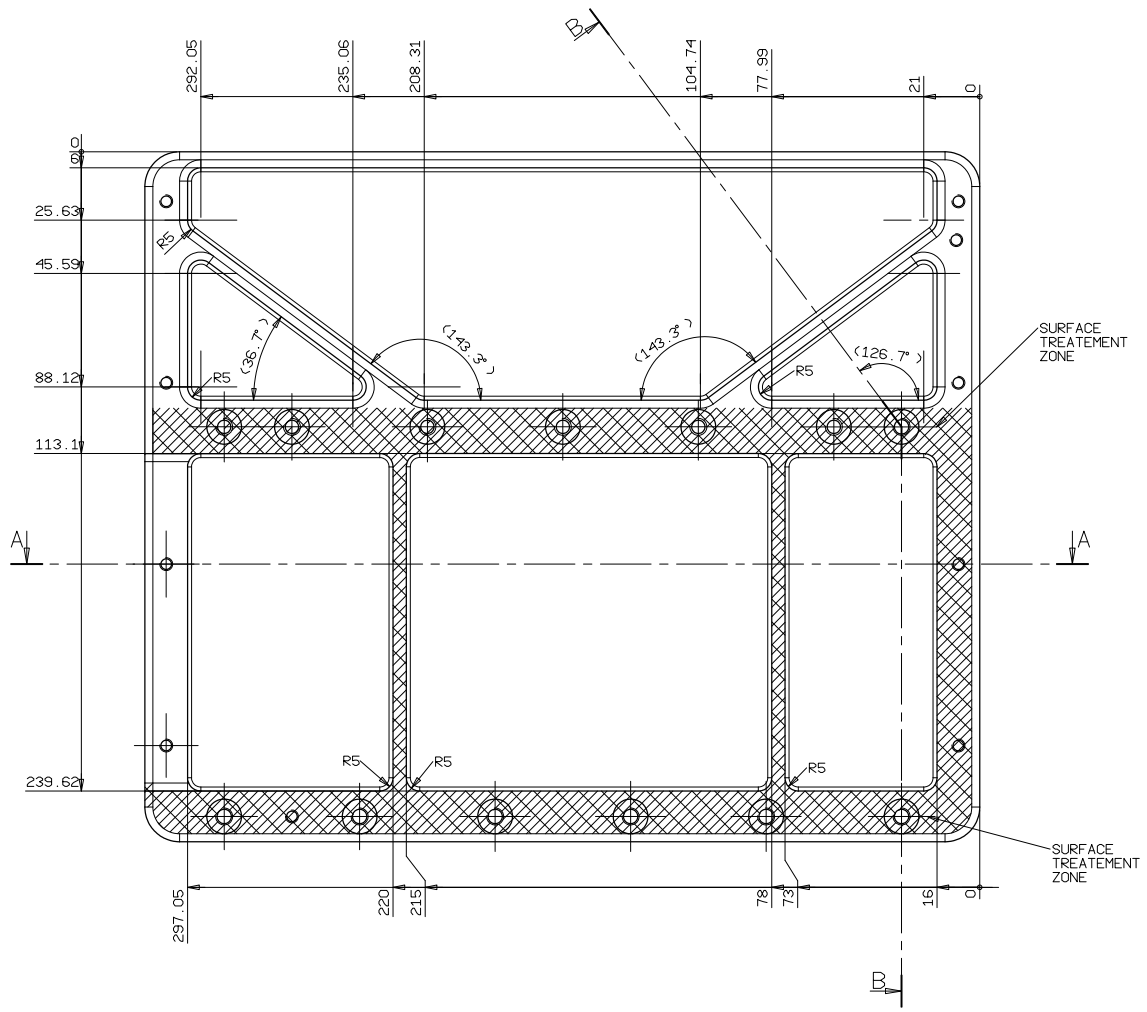

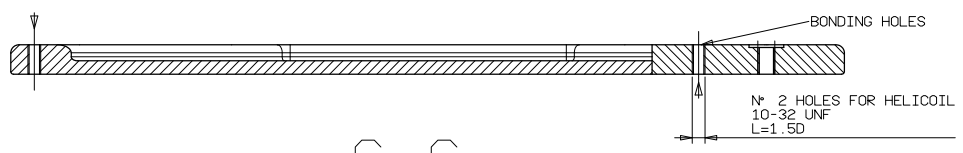

C–C

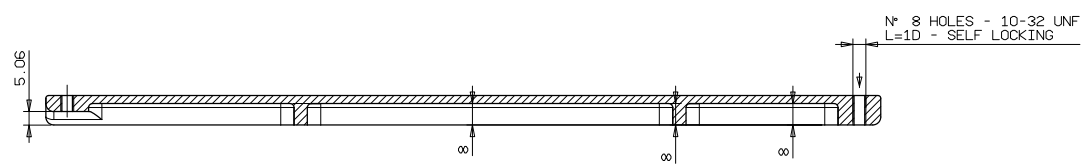

A–A

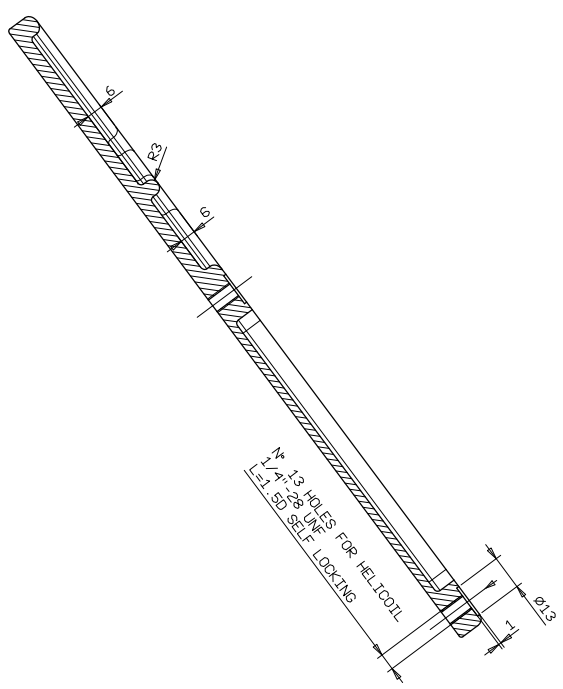

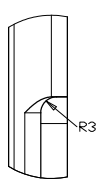

DETAIL "A"
SCALE FACTOR 1:1

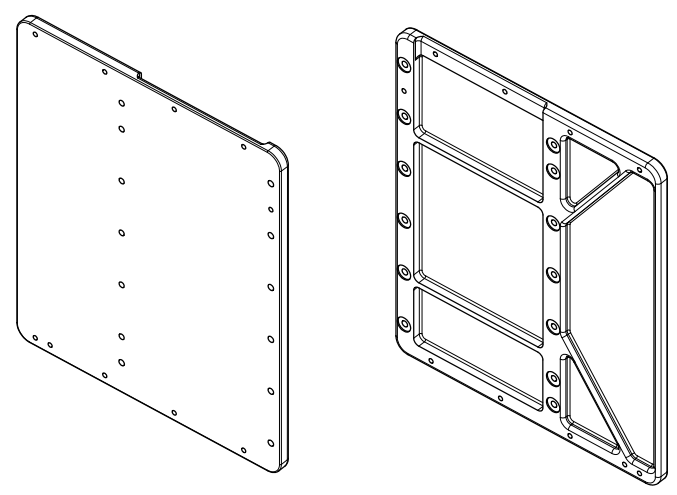

3D OVERVIEW
(NO SCALE)

NOTES:
- MATERIAL : AL ALLOY 7075 T7351 SPEC. QQ-A-250/12
- GENERAL SURFACE TREATMENT : SURFACE TO BE PAINTED WITH SG121FD WHITE PAINT ACC. TO MAP DATA SHEET RS127
- LOCAL SURFACE TREATMENT : ALODINE 1200 SPEC. MIL-C-5541 CLASS 3
- REMOVE BURRS AND BREAK SHARP EDGES 0.5X45° ACC. TO DIN 6784
- HELI-COIL INSERTION DIRECTION
- INSERT HELI-COIL ACC. TO SPEC. GD-PR-CGS-060
- INSERT HELI-COIL AFTER SURFACE TREATMENT

FLAG NOTES:
- 1 CHECK DIMENSION (USS I/F)

REV	DATE	DRAWN	CHECK	ENG.	PR. ASS.	C. of C.	CHANGE AUTHORITY
A	03/06/2005	HIGHFTECH					ECO-00048
/	31/05/2004	HIGHFTECH					

CUSTOMER ID | EFFECTIVITY | CARLO GAVAZZI SPACE

DRAWING TITLE
AMS 02 - CRATES
E CRATE SUPPORT

SCALE 1:2 | GEN. TOL. ISO 2768 f | GEN. RA. 3.2

CARLO GAVAZZI

HIGHER ASSEMBLY 23-AMS-100.99.00 | DRAWING NUMBER 24-AMS-110.11.10 | SHEET 1 OF 1

FILE DRAWING: E_CRATE_SUPPORT_REVA

All information contained in this document are property of CARLO GAVAZZI SPACE.
All rights reserved.