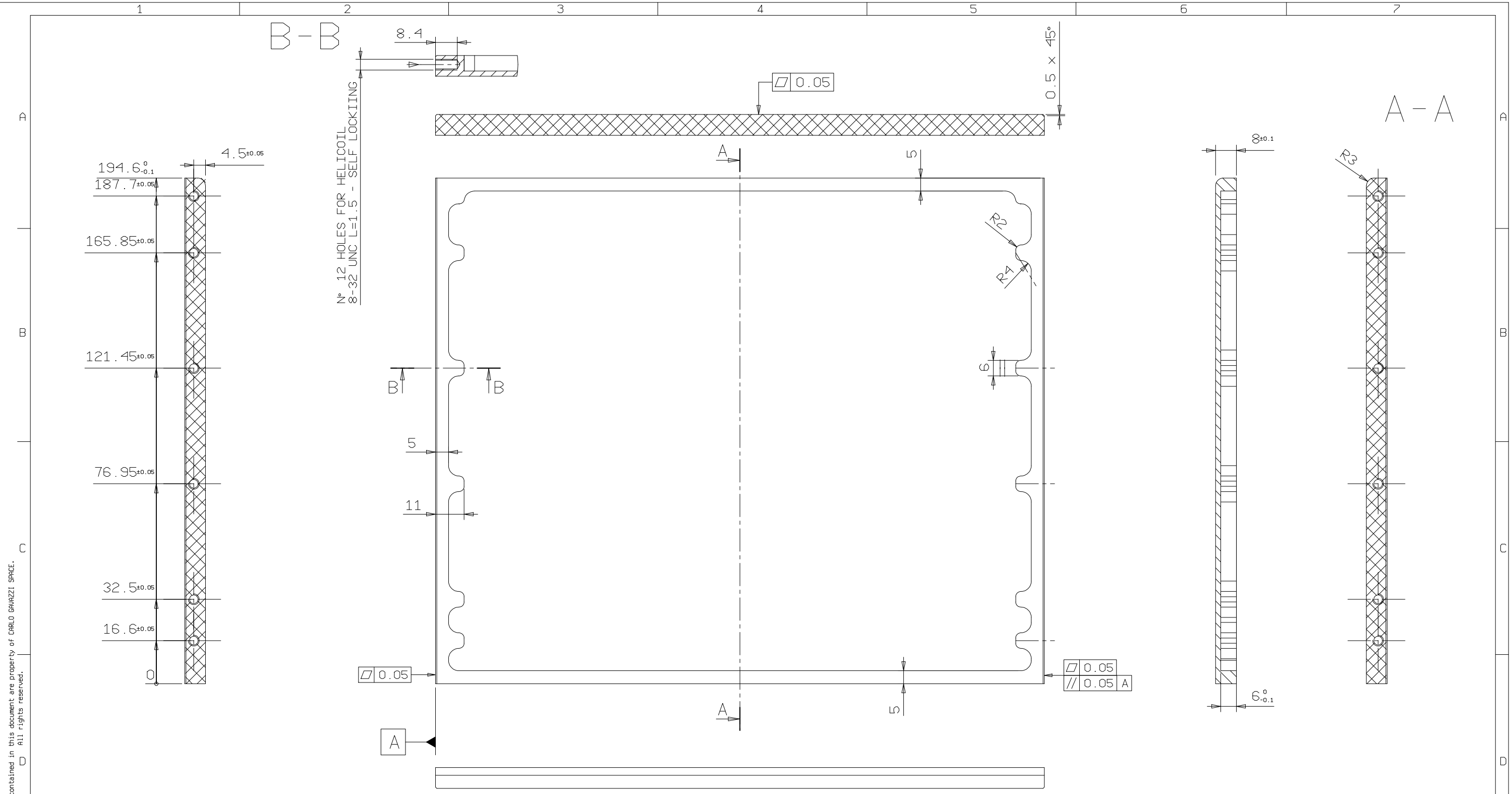

All information contained in this document are property of CARLO GAVAZZI SPACE.
All rights reserved.

3 D OVERWIEV
(NO SCALE)

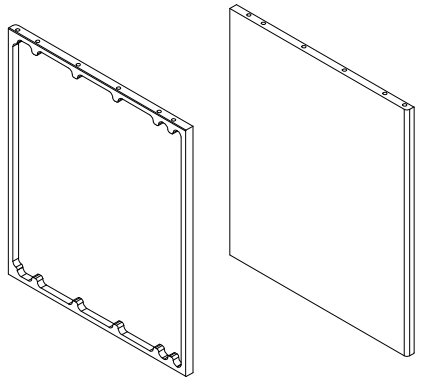

NOTES:
- MATERIAL : AL ALLOY 7075 T7351 SPEC. QQ-A-250/12
- GENERAL SURFACE TREATMENT : SURFACE TO BE PAINTED WITH SG121FD WHITE PAINT ACC. TO MAP DATA SHEET RS127
- LOCAL SURFACE TREATMENT : ALODINE 1200 SPEC. MIL-C-5541 CLASS 3
- REMOVE BURRS AND BREAK SHARP EDGES 1X45° ACC. TO DIN 6784
- HELI-COIL INSERTION DIRECTION
- INSERT HELI-COIL ACC. TO SPEC. GD-PR-CGS-060
- INSERT HELI-COIL AFTER SURFACE TREATMENT

FILE DRAWING: E_SIDE_WALL_LEFT

REV	DATE	DRAWN	CHECK	ENG.	PR. ASS.	C. of C.	CHANGE AUTHORITY
/	31/05/2004	HIGHFTECH					

CUSTOMER ID | EFFECTIVITY | CARLO GAVAZZI SPACE

DRAWING TITLE
AMS 02 - CRATES
E SIDE WALL LEFT

SCALE 1:1 | GEN. TOL. ISO 2768 f | GEN. RA. 3.2

HIGHER ASSEMBLY 24-AMS-110.00.10 | DRAWING NUMBER 24-AMS-110.04.10 | SHEET 1 OF 1