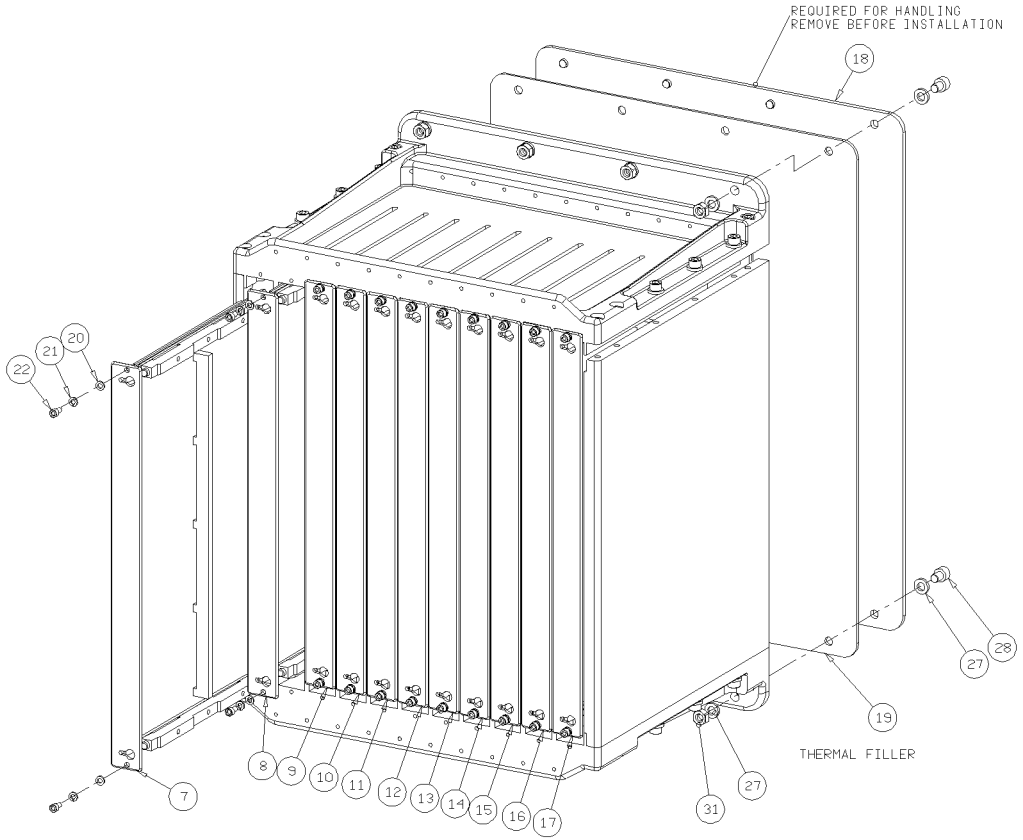

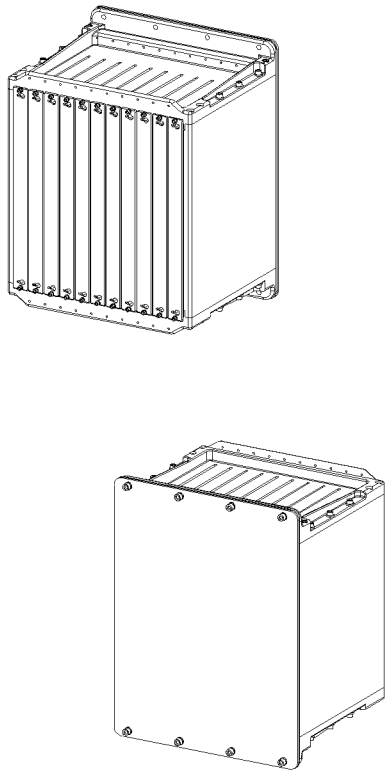

3D OVERVIEWS

in questa pagina i cambiamenti sono solo per questioni di grafica : i frontalini sono con sharp edge

All information contained in this document are property of CARLO GAVAZZI SPACE.
All rights reserved.

FILE DRAWING: E_CRATE_ASSY_2_2

REV	DATE	DRAWN	CHECK	ENG.	PR. ASS.	C. of C.	CHANGE AUTHORITY
/	07/09/2004	HIGHFTECH					

CUSTOMER ID

EFFECTIVITY

CARLO GAVAZZI SPACE

DRAWING TITLE
AMS 02 - CRATES
CRATE ASSY
(ECRATE)

SCALE NO SCALE

GEN. TOL.

GEN. RA.

CARLO GAVAZZI

HIGHER ASSEMBLY

DRAWING NUMBER 24-AMS-110.00.10

SHEET 2 OF 2