CARLO GAVAZZI CARLO GAVAZZI SPACE SpA	**AMS02**

Tipo Doc.: *Doc.Type:*	PROCEDURE			N° DRD: *DRD N°:*	NA
N° Doc.: *Doc. N°:*	AMS02-PR-CGS-003	Ediz.: *Issue:* 1	Data: *Date:* **17/07/2007**	Pagina *Page* **1**	Di *Of* **21**
Titolo : *Title :*	AMS02 E-CRATE MECHANICAL INTEGRATION PROCEDURE				

	Nome & Funzione *Name & Function*	Firma *Signature*	Data *Date*
Preparato da: *Prepared by:*	Giacomazzo M. (DT/MT)	[signature]	17/07/07
Approvato da: *Approved by:*	Molina M. (DT/MT) Cremonesi. (PA/SF) Cinquepalmi C. (PC/CC)	[signature] [signature] [signature]	17/7/07 17.07.07 17.07.07
Applicazione autorizzata da: *Application authorized by:*	Molina M. (DT/MT)	[signature]	17/7/07
Customer / Higher Level Contractor			
Accettato da: *Accepted by:*			
Approvato da: *Approved by:*			

LISTA DI DISTRIBUZIONE *DISTRIBUTION LIST*	N	A	I
Interna / *Internal*			
Esterna / *External*			

N=Numero di copie A=Applicazione I=Informazione
N=Number of copy A=Application I=Information

Gestione documenti: *Data Management:*	[signature] Firma / *Signature* 17/07/07 Data / *Date*	File: AMS02-PR-CGS-003_iss1.doc

Questo documento contiene informazioni di proprietà di CARLO GAVAZZI SPACE SpA: Tutti i diritti sono riservati
All information contained in this document are property of CARLO GAVAZZI SPACE SpA. All right reserved.

REGISTRAZIONE DELLE MODIFICHE / *CHANGE RECORD*			
EDIZIONE *ISSUE*	DATA *DATE*	AUTORIZZAZIONE *CHANGE AUTHORITY*	OGGETTO DELLA MODIFICA E SEZIONI AFFETTE *REASON FOR CHANGE AND AFFECTED SECTIONS*
1	17/07/2007		First issue

Questo documento contiene informazioni di proprietà di CARLO GAVAZZI SPACE SpA. Tutti i diritti sono riservati.
All information contained in this document are property of CARLO GAVAZZI SPACE SpA. All right reserved.

LISTA DELLE PAGINE VALIDE / *LIST OF VALID PAGES*

PAGINA *PAGE*	EDIZIONE *ISSUE*	PAGINA *PAGE*	EDIZIONE *ISSUE*	PAGINA *PAGE*	EDIZIONE *ISSUE*	PAGINA *PAGE*	EDIZIONE *ISSUE*	PAGINA *PAGE*	EDIZIONE *ISSUE*
1 - 21	1								

Questo documento contiene informazioni di proprietà di CARLO GAVAZZI SPACE SpA. Tutti i diritti sono riservati.
All information contained in this document are property of CARLO GAVAZZI SPACE SpA. All right reserved.

TABLE OF CONTENT

1. SCOPE **5**

1.1 LIST OF ACRONYMS 5

2. REFERENCE DOCUMENTS **6**

3. DESCRIPTION OF E-CRATE **7**

4. REQUIREMENTS / CONDITIONS **14**

4.1 REQUIRED DOCUMENTS/ TOOLS 14
4.2 HARDWARE PROTECTION 14
4.3 PRODUCT ASSURANCE 14
4.4 ENVIRONMENTAL CONDITIONS 15
4.5 PERSONNEL 15

5. ORGANIZATION OF INTEGRATION **15**

5.1 RISKS 15
5.2 STAFF/RESPONSABILITIES 15
5.3 INTEGRATION INSTRUCTIONS 15
5.4 SPECIAL MEASURES 15

6. STEP-BY STEP ASSEMBLY SEQUENCE **16**

7. SCREW TORQUE LOG SHEET **17**

LIST OF FIGURES

Figure 3-1: E-CRATE exploded view 7
Figure 3-2:E-CRATE boards location 8
Figure 3-3:BP Joints 10
Figure 3-4:Back Cover Joints 11
Figure 3-5:Main Wall Lower Joints 12
Figure 3-6:Main Wall Upper Joints 12
Figure 3-7: Top View 13

LIST OF TABLES

Table 3-1: E-crate part list 9
Table 4-1 E-crate drawing status 14
Table 4-2 Required Tools 14
Table 6-1 STEP_BY_STEP Assembly sequence 16
Table 7-1 Screw torque log sheet 21

Questo documento contiene informazioni di proprietà di CARLO GAVAZZI SPACE SpA. Tutti i diritti sono riservati.
All information contained in this document are property of CARLO GAVAZZI SPACE SpA. All right reserved.

1. SCOPE

The document present the technical aspects for the assembly of the E-crate unit. It has been reported the E-crate brief description, the integration sequence and mainly the screw torque indication.

1.1 LIST OF ACRONYMS

A

ABCL	As-Built Configuration data List
ADP	Acceptance Data Package
AR	Acceptance Review
ATP	Authorization To Proceed

B

BC	Back Cover
BP	Back Panel

C

CAD	Computer Aided Design
CDR	Critical Design Review
CGS	Carlo Gavazzi Space
CI	Configuration Item
CIDL	Configuration Item data List

D

DRD	Document Requirements Description

E

EGSE	Electrical Ground Support Equipment
EM	Engineering Model

F

FEM	Finite Element Model
FFMAR	Final Flight Model Acceptance Review
FM	Flight Model

G

GSE	Ground Support Equipment

H

HW	Hardware

I

ICD	Interface Control Document
I/F	Interface
ISS	International Space Station

J

JSC	Johnson Space Center

K

KSC	Kennedy Space Center

L

M

N

NA	Not Applicable
NASA	National Aeronautics and Space Administration

Questo documento contiene informazioni di proprietà di CARLO GAVAZZI SPACE SpA. Tutti i diritti sono riservati.
All information contained in this document are property of CARLO GAVAZZI SPACE SpA. All right reserved.

NCR Non Conformance Report
NRB Non-conformance Review Board
NSTS National Space Transportation System (Shuttle)

O

P
PA Product Assurance
PCB Printed Circuit Board
PDR Preliminary Design Review
P/F Pass/Failed

Q
QM Qualification Model

R
RFD Request For Deviation
RFW Request For Waiver

S
STS Space Transportation System (Shuttle)
SW Software

T
TBC To Be Confirmed
TBD To Be Defined
TRB Test Review Board
TRR Test Readiness Review

U

2. REFERENCE DOCUMENTS

See Table 4-1 E-crate drawing status

Questo documento contiene informazioni di proprietà di CARLO GAVAZZI SPACE SpA. Tutti i diritti sono riservati.
All information contained in this document are property of CARLO GAVAZZI SPACE SpA. All right reserved.

3. DESCRIPTION OF E-CRATE

The following pictures show the E-crate main part and the electronic board accommodation inside the unit:

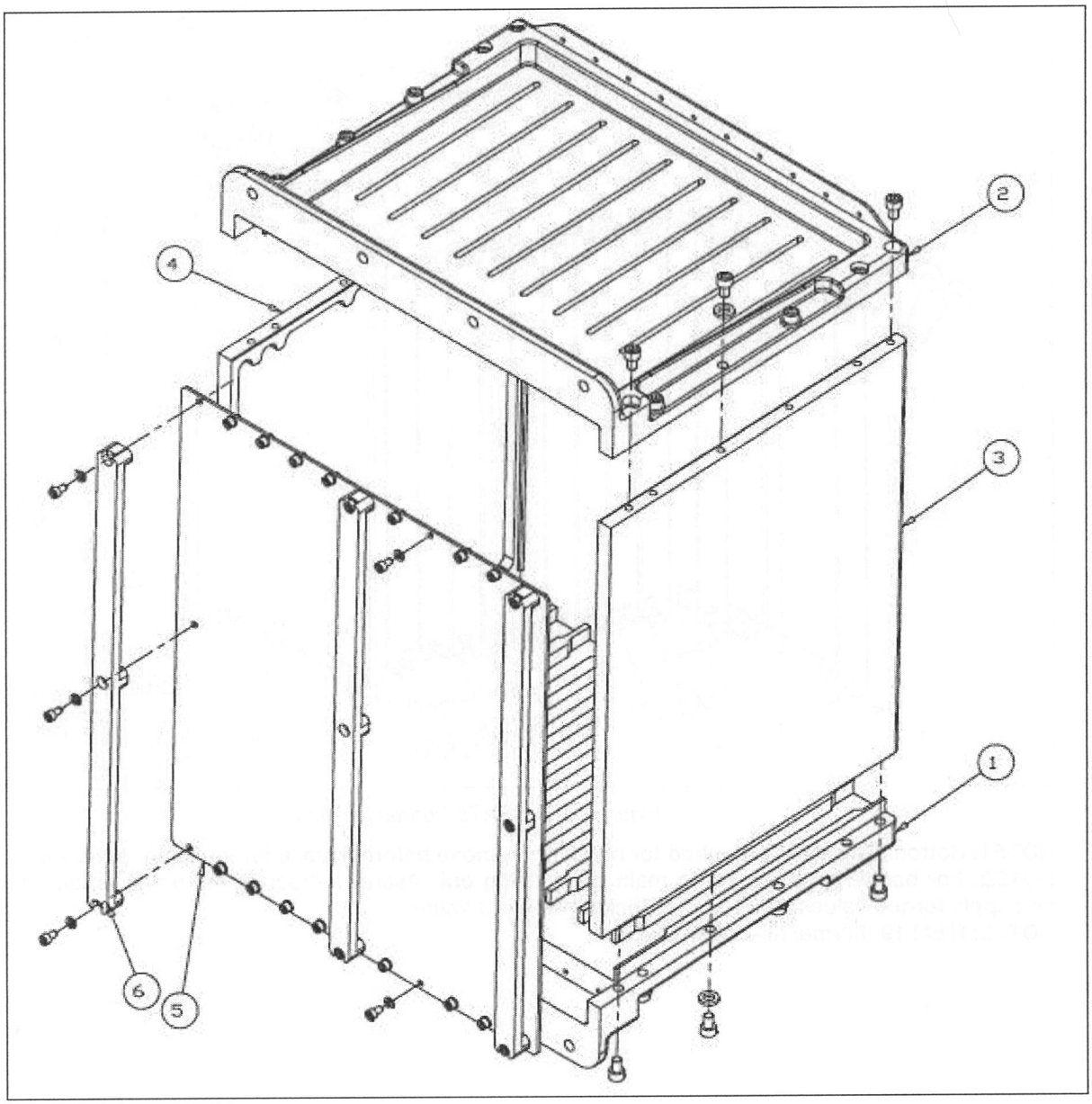

Figure 3-1: E-CRATE exploded view

Questo documento contiene informazioni di proprietà di CARLO GAVAZZI SPACE SpA. Tutti i diritti sono riservati.
All information contained in this document are property of CARLO GAVAZZI SPACE SpA. All right reserved.

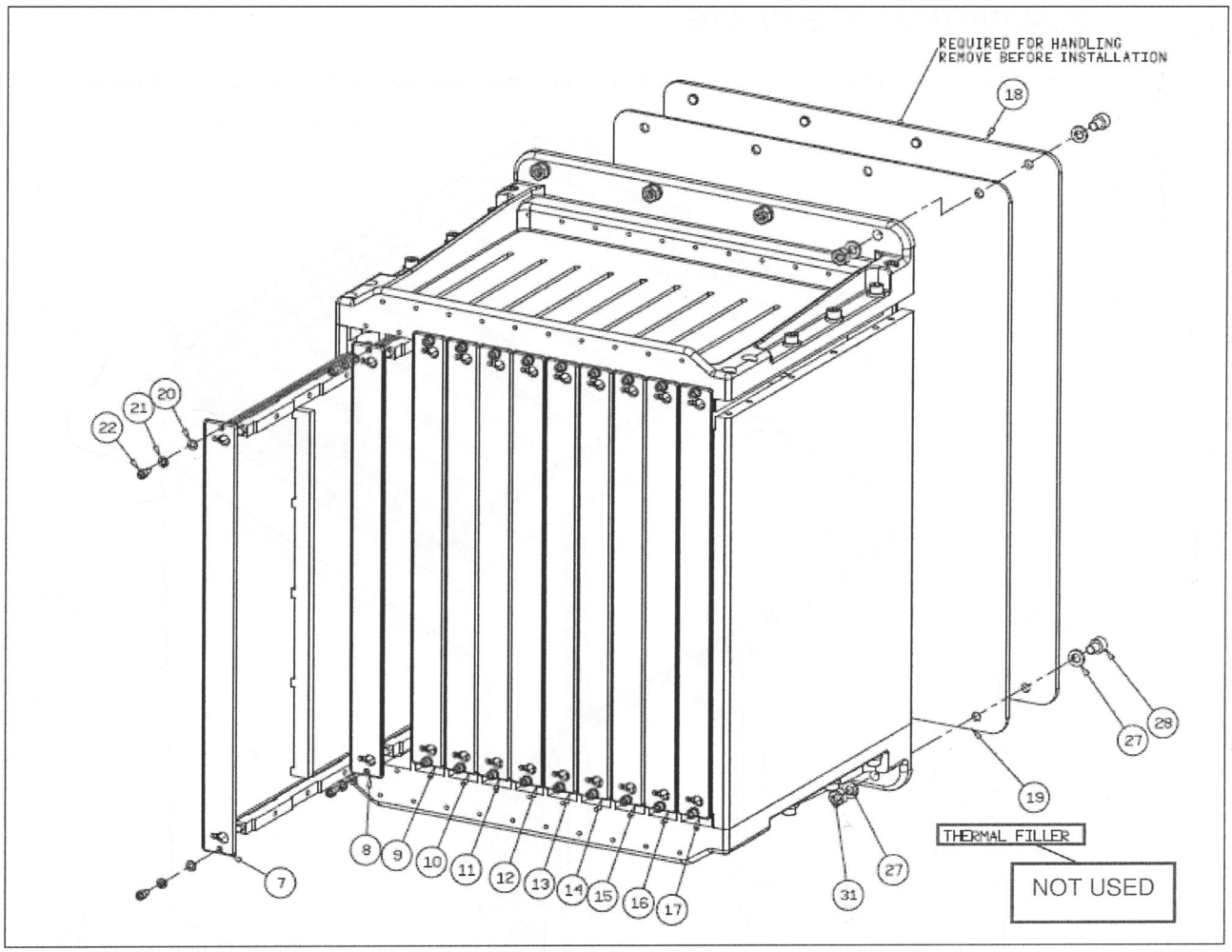

Figure 3-2:E-CRATE boards location

NOTE1: Bottom Cover (BC) required for handling: remove before installation on main radiators
NOTE2: For handling fix the BC to main walls using only 4screws (2per sides) using an alternate pattern and apply torque value 2.485 Nm plus locking element value.
NOTE3: ITEM 19 thermal filler NOT USED

Questo documento contiene informazioni di proprietà di CARLO GAVAZZI SPACE SpA. Tutti i diritti sono riservati.
All information contained in this document are property of CARLO GAVAZZI SPACE SpA. All right reserved.

The table below provide a list of the main part of E-crate and the electronic board installed:

ITEM	DESCRIPTION	PROC.SPEC	P/N-ID.CODE	REMARKS
1	E Crate Main Wall Lower			
2	E Crate Main Wall Upper			
3	Crate Side Wall Left			
4	Crate Side Wall Right			
5	E Crate Back Plane			BP thickness =3.2mm
6	Crate Back Plane Stiffener			
7	Board EDR2			
8	Board EPSFE			
9	Board EDR2			
10	Board EDR2			
11	Board EPSFE			
12	Board EDR2			
13	Board JINF			
14	Board EDR2			
15	Board EPSFE			
16	Board EDR2			
17	Board ETRG			
18	E Crate Back Cover			
19	Thermal filler - NOT USED			
20	Washer #4	NAS620-C4	NAS620C04	NASA PROVIDED FOR FM/FS MODEL
21	Spring Washer #4	MS35338135	MS35338-135	NASA PROVIDED FOR FM/FS MODEL
22	Screw #4-40 UNC-3A 1/4" L	NAS1352	NAS1352C04-4	NASA PROVIDED FOR FM/FS MODEL
23	Screw #4-40 UNC-3A 1/2" L	NAS1352	NAS1352C04-8	NASA PROVIDED FOR FM/FS MODEL
24	Washer #8	NAS620	NAS620C8	NASA PROVIDED FOR FM/FS MODEL
25	Screw #8-32 UNC-3A 5/8" L	NAS1352	NAS1352N08-10	NASA PROVIDED FOR FM/FS MODEL
26	Screw #8-32 UNC-3A 1/2" L	NAS1352	NAS1352N08-14	NASA PROVIDED FOR FM/FS MODEL
27	Washer #10	NAS620	NAS620C10	NASA PROVIDED FOR FM/FS MODEL
28	Screw #10-32 UNF-3A 5/8" L	NAS1351	NAS1351-N3-10	
29	Screw #4-40 UNC-3A 5/8" L	NAS1352	NAS1352-C04-6	
30	Nut #4	MS35649-244	MS35649-244	
31	Nut #10	MS35649-204		
32	HeliCoil 4-40 UNC L=1D Self Locking	MS21209	MS21209C04-10	
33	HeliCoil 4-40 UNC L=1,5D Self Locking	MS21209	MS21209C04-15	
34	HeliCoil 10-32 UNF L=1.5D Self Locking	MS21209	MS21209F1-15	NASA PROVIDED FOR FM/FS MODEL
35	HeliCoil 10-32 UNF L=1D Self Locking	MS21209	MS21209F1-10	NASA PROVIDED FOR FM/FS MODEL
36	HeliCoil 8-32 UNC L=1.5D Self Locking	MS21209	MS21209C0815	NASA PROVIDED FOR FM/FS MODEL

Table 3-1: E-crate part list

Questo documento contiene informazioni di proprietà di CARLO GAVAZZI SPACE SpA. Tutti i diritti sono riservati.
All information contained in this document are property of CARLO GAVAZZI SPACE SpA. All right reserved.

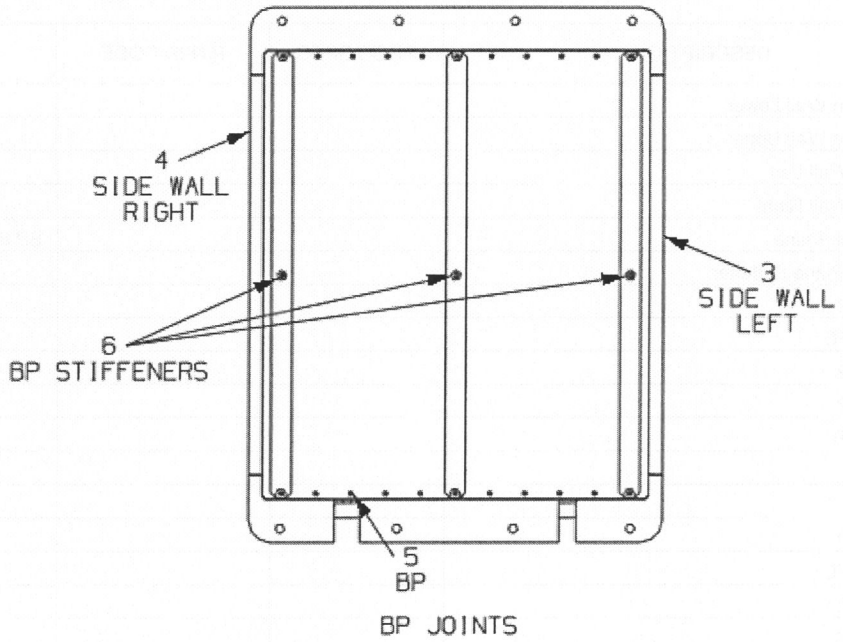

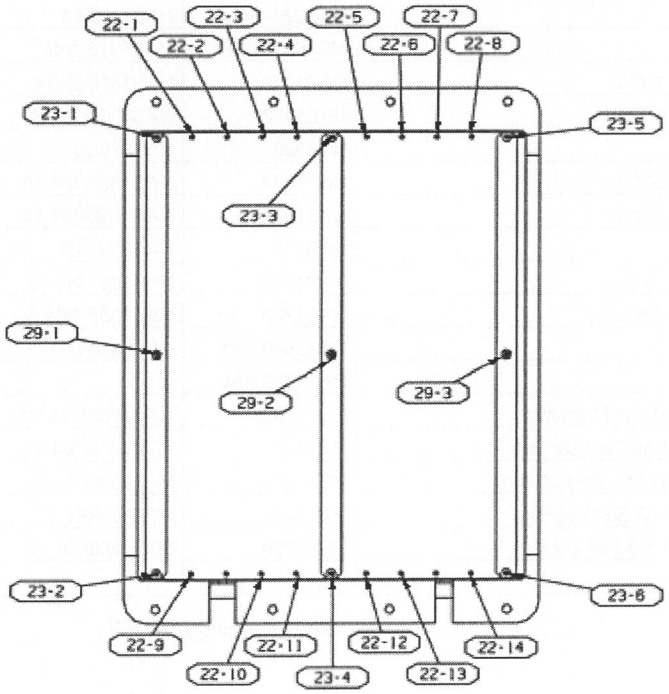

Figure 3-3:BP Joints

Questo documento contiene informazioni di proprietà di CARLO GAVAZZI SPACE SpA. Tutti i diritti sono riservati.
All information contained in this document are property of CARLO GAVAZZI SPACE SpA. All right reserved.

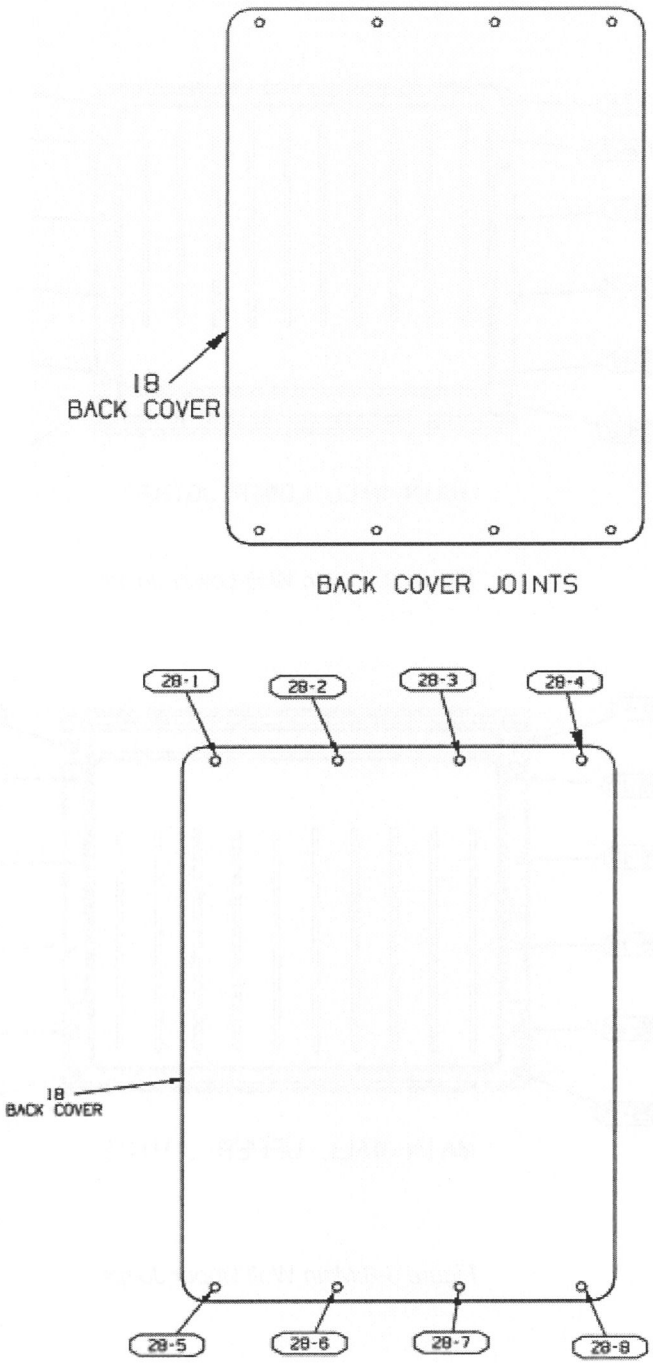

Figure 3-4:Back Cover Joints

Questo documento contiene informazioni di proprietà di CARLO GAVAZZI SPACE SpA. Tutti i diritti sono riservati.
All information contained in this document are property of CARLO GAVAZZI SPACE SpA. All right reserved.

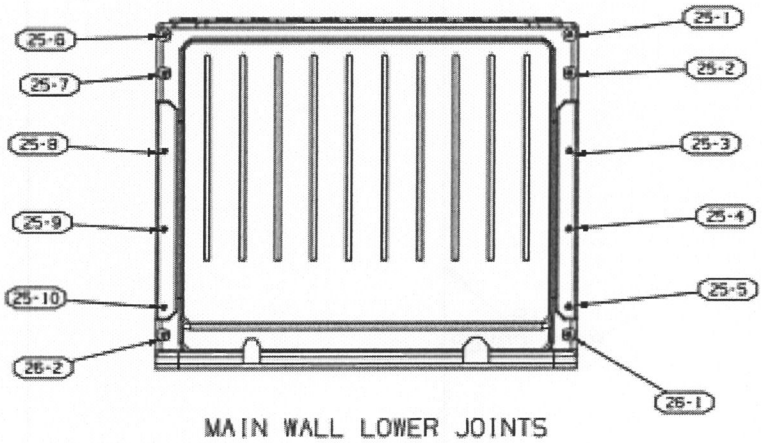

Figure 3-5:Main Wall Lower Joints

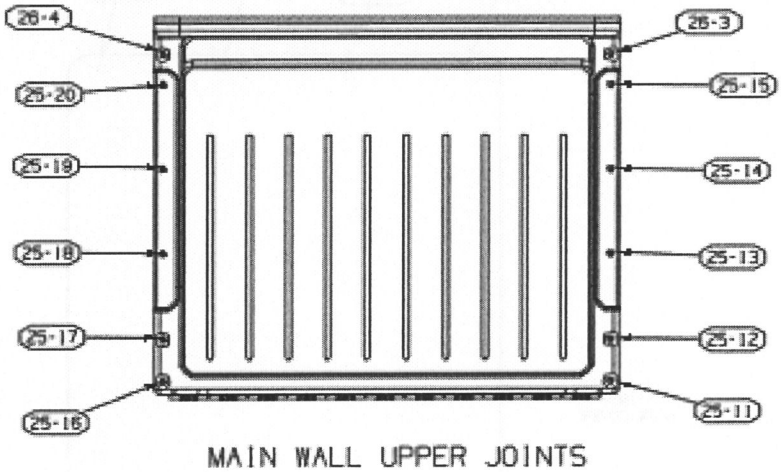

Figure 3-6:Main Wall Upper Joints

Questo documento contiene informazioni di proprietà di CARLO GAVAZZI SPACE SpA. Tutti i diritti sono riservati.
All information contained in this document are property of CARLO GAVAZZI SPACE SpA. All right reserved.

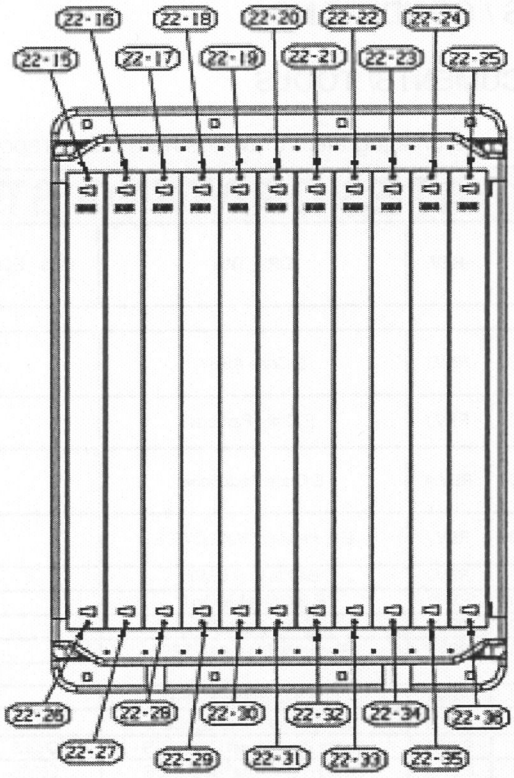

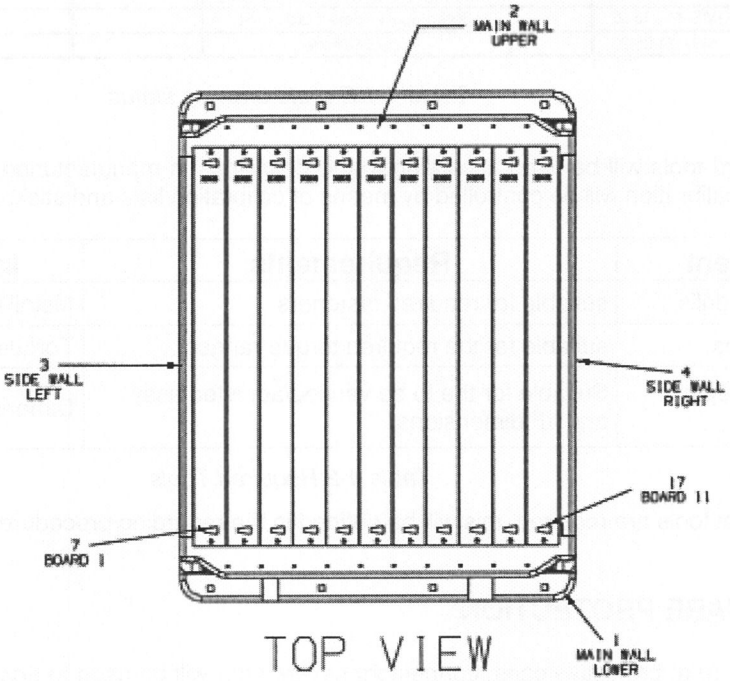

Figure 3-7: Top View

Questo documento contiene informazioni di proprietà di CARLO GAVAZZI SPACE SpA. Tutti i diritti sono riservati.
All information contained in this document are property of CARLO GAVAZZI SPACE SpA. All right reserved.

4. REQUIREMENTS / CONDITIONS

4.1 REQUIRED DOCUMENTS/ TOOLS

The assembly activities are based on integration drawings here below reported for reference:

AMS02 - CRATES DRAWING STATUS : E -ERPD

IS IT A MECHANICAL PART?	DRW Number	REV	DRW Title	CGS ECO	NCR	STATUS
E CRATE						
N	24-AMS-110.00.10	REV./	E Crate ASSY			NOT OK : BP JOINTS,BOTTOM COVER INTEGRATION NOTES, NEW TORQUE VALUES
N	24-AMS-110.01.10	REV./	E Crate Part List			NOT OK : general update of part list
N	24-AMS-110.02.10	REV.A	E Crate BackPlane			OK ? If necessary (integration problems) cut 0.05mm on both edges (length reduced by0.1mm)
Y	24-AMS-110.03.10	REV./	E crate Main Wall LOWER			NOT OK : CABLE SLOT ROUND EDGES
Y	24-AMS-110.04.10	REV./	E Side Wall LEFT			OK
Y	24-AMS-110.05.10	REV./	E Side Wall RIGHT			OK
Y	24-AMS-110.08.10	REV./	E Crate Back Cover			OK
Y	24-AMS-110.09.10	REV./	Ecrate Main Wall UPPER			OK
CRATES COMMON PARTS						
Y	24-AMS-110.06.00	REV./	Crate BackPlane Stiffener			OK
Y	24-AMS-111.03.96	REV.A	Board Front Panel Standard	00025		OK
Y	24-AMS-111.03.97	REV.A	Board Front Panel Double SS	00025		OK
Y	24-AMS-111.03.98	REV.A	Board Front Panel Double CS	00025		OK
Y	24-AMS-111.03.99	REV.A	Board Front Panel Standard	00025		OK
Y	24-AMS-111.04.00		Board Spacer Component Side (CS)			OK
Y	24-AMS-111.05.00		Board Spacer Solder Side (SS)			OK
Y	24-AMS-111.06.00		Board Stiffener			OK

Table 4-1 E-crate drawing status

In general standard tools will be used according to the definitions in manufacturing and integration procedures. All tools which need calibration will be controlled by means of calibration lists and stickers on the tools.

Tool/Equipment	Requirements	Intended Application
Tools/calibrated drills	suitable for required fasteners	Install fasteners during assembly
Torque Wrenches	suitable for the required torque ranges	Torquing of joint bolts
Caliper Rules/ Depth Gages	Suitable for the to be verified/adjusted assy and I/F dimensions	Dimension measurement

Table 4-2 Required Tools

Where ever special tools are required, this will be defined in the regarding procedures.

4.2 HARDWARE PROTECTION

Protective devices (e.g. protective caps, connectors savers etc.) will be used to ensure that no damage of the H/W will lead the degradation of the items.

4.3 PRODUCT ASSURANCE

Questo documento contiene informazioni di proprietà di CARLO GAVAZZI SPACE SpA. Tutti i diritti sono riservati.
All information contained in this document are property of CARLO GAVAZZI SPACE SpA. All right reserved.

As a result of the design and development phase some safety aspects concerning qualification tests will be verified during integration and test to close the associated hazards of system safety analysis. Identified critical processes, functions and safety significant operations will be controlled by PA personnel during the activities.

4.4 ENVIRONMENTAL CONDITIONS

All assembly activities will be performed in dedicated facilities at an ambient temperature of 20°± 5°C. This is also the reference temperature for the manufacturing process.
It is important to perform the assembly activities at this specified temperature to prevent the generation of constraints and there-by built-in stresses. Recording of the ambient temperature during the dimensional verification is mandatory.

4.5 PERSONNEL

For all processes and activities where it is required (e.g. crimping, soldering etc.), only properly trained personnel will perform the work.

5. ORGANIZATION OF INTEGRATION

The integration steps are put into chronological order, according to strategies, risks, and other marginal conditions :

Production control is performed after a manufacturing release; each single selfstanding item is inspected and documented on an inspection record. All materials for such items will be controlled beginning with the raw material manufacturing, during storage and until final manufacturing.
The main phases of the integration process are:

0. Preliminary phase
1. Pre-assembly phase for main chassis
2. Insert of the electronic boards
3. Final assembly of the complete structure inclusive all subassemblies

The last chapter of this document provide the step-by step Assembly plan in form of Task sheets which describe each assembly sequence in detail and require all intermediate assembly inspections, measurements, also.

5.1 RISKS

If a special integration step happens to be risky the possibly existing problems and counter-measures have to be documented (e. g. danger for hardware during interaction with faulty software while no protection measures have been taken).
Non Conformance Reports (NCRs) are raised for all measurements values out of specified ranges and classified for minor/Major severity. A Review Board is to decide on the suggested recovery actions for the non conformances.

5.2 STAFF/RESPONSABILITIES

The organizational units/instances are allocated responsibilities within the scope of the integration (supervision of the time schedule, realization of certain integration steps, quality assurance measures, etc.).

5.3 INTEGRATION INSTRUCTIONS

The technical instructions have to be generated on the basis of the integration strategies and marginal conditions. This includes procedures for the assembly of products as well as instructions for the integration equipment.

5.4 SPECIAL MEASURES

Each screw torque shall be verified and record into the **screw torque log sheet**

Questo documento contiene informazioni di proprietà di CARLO GAVAZZI SPACE SpA. Tutti i diritti sono riservati.
All information contained in this document are property of CARLO GAVAZZI SPACE SpA. All right reserved.

6. STEP-BY STEP ASSEMBLY SEQUENCE

0 Preliminary phase					
step	**Activity description**	**P/F**	**Date**	**Sign.**	**Stamp**
0.1	Prior to start of any assembly activity make sure that: All the E-crate parts (aluminium wall, e-boards, screw, washer ecc) are available according to the E-crate part list The required tools and equipments are available. Especially observe the calibration status of measuring and safety relevant equipment. If recalibration is necessary do not proceed until the tool is ready to be used.				
0.2	Record type and calibration data of tools and devices				
1 Pre-assembly phase					
step	**Activity description**	**P/F**	**Date**	**Sign.**	**Stamp**
1.1	Individuate the proper screw and washer necessary to assembly the E-crate chassis and verify the screw torque on the **screw torque log sheet**				
1.2	According to the chapter 3 assembly the E-crate walls (see part list ITEM 1,2,3 and 4).				
1.3	Record the screw torque applied in the **screw torque log sheet**				
1.4	Verify the assembly tolerances and IF				
1.5	Individuate the proper screw and washer necessary to assembly the E-crate Back-Plane (BP) item5 and BP stiffener item6 and verify the screw torque on the **screw torque log sheet**				
1.6	assembly the E-crate BP and BP stiffener according to Figure 3-3 to the E-crate chassis **NOTE: use with washer item 20 only if BP thickness is less then 3.2 mm for joints 22-X and 23-X.**				
1.7	Record the screw torque applied in the **screw torque log sheet**				
1.8	Verify the assembly tolerances and IF for the e-boards installation				
2 Electronic boards insertion					
step	**Activity description**	**P/F**	**Date**	**Sign.**	**Stamp**
2.1	Verify that each single e-boards sub-assembly is ready to be inserted into the E-crate chassis. All the part of the sub-assembly shall be suitable fixed and verified.				
2.2	Individuate the proper tools, screw and washer necessary to insert the e-boards and verify the screw torque on the **screw torque log sheet**				
2.3	Insert the single boards with care in order to avoid any damage				
2.4	Apply the proper torque to the card-retainer screw and the to the screw for board fixation to main walls.				
2.5	Record the final value on the **screw torque log sheet**				
3 Final assembly					
step	**Activity description**	**P/F**	**Date**	**Sign.**	**Stamp**
3.1	Verify the assembly, the tolerance and the IFs				
3.2	Individuate the proper screw and washer necessary to assembly the E-crate Back-Cover (BC)				
3.3	Apply the Back-Cover item 18. Thermal filler item 19 NOT USED				
3.4	According to Figure 3-2 assembly the item taking into account the notes of Figure 3-2.				

Table 6-1 STEP_BY_STEP Assembly sequence

Questo documento contiene informazioni di proprietà di CARLO GAVAZZI SPACE SpA. Tutti i diritti sono riservati.
All information contained in this document are property of CARLO GAVAZZI SPACE SpA. All right reserved.

7. SCREW TORQUE LOG SHEET

ITEM	Screw ID	BOLT type	PROC SPEC	Meas. running torque [Nm] (*)	Tight. torque [Nm]	1st Integration			2nd Integ.			3rd Integ.			4th Integ.			5th Integ.		
						Final torque [Nm] = Meas. running torque + mean tight. torque	Date	Signature	Final torque [Nm]	Date	Signature	Final torque [Nm]	Date	Signature	Final torque [Nm]	Date	Signature	Final torque [Nm]	Date	Signature
22	22-1	Screw #4-40 UNC-3A 1/4" L	NAS1352		0.4-0.5															
	22-2	Screw #4-40 UNC-3A 1/4" L	NAS1352		0.4-0.5															
	22-3	Screw #4-40 UNC-3A 1/4" L	NAS1352		0.4-0.5															
	22-4	Screw #4-40 UNC-3A 1/4" L	NAS1352		0.4-0.5															
	22-5	Screw #4-40 UNC-3A 1/4" L	NAS1352		0.4-0.5															
	22-6	Screw #4-40 UNC-3A 1/4" L	NAS1352		0.4-0.5															
	22-7	Screw #4-40 UNC-3A 1/4" L	NAS1352		0.4-0.5															
	22-8	Screw #4-40 UNC-3A 1/4" L	NAS1352		0.4-0.5															
	22-9	Screw #4-40 UNC-3A 1/4" L	NAS1352		0.4-0.5															
	22-10	Screw #4-40 UNC-3A 1/4" L	NAS1352		0.4-0.5															

Questo documento contiene informazioni di proprietà di CARLO GAVAZZI SPACE SpA. Tutti i diritti sono riservati.
All information contained in this document are property of CARLO GAVAZZI SPACE SpA. All right reserved.

	22-11	Screw #4-40 UNC-3A 1/4" L	NAS1352		0.4-0.5																
	22-12	Screw #4-40 UNC-3A 1/4" L	NAS1352		0.4-0.5																
	22-13	Screw #4-40 UNC-3A 1/4" L	NAS1352		0.4-0.5																
	22-14	Screw #4-40 UNC-3A 1/4" L	NAS1352		0.4-0.5																
	22-15	Screw #4-40 UNC-3A 1/4" L	NAS1352		0.4-0.5																
	22-16	Screw #4-40 UNC-3A 1/4" L	NAS1352		0.4-0.5																
	22-17	Screw #4-40 UNC-3A 1/4" L	NAS1352		0.4-0.5																
	22-18	Screw #4-40 UNC-3A 1/4" L	NAS1352		0.4-0.5																
	22-19	Screw #4-40 UNC-3A 1/4" L	NAS1352		0.4-0.5																
	22-20	Screw #4-40 UNC-3A 1/4" L	NAS1352		0.4-0.5																
22	22-22	Screw #4-40 UNC-3A 1/4" L	NAS1352		0.4-0.5																
	22-23	Screw #4-40 UNC-3A 1/4" L	NAS1352		0.4-0.5																
	22-24	Screw #4-40 UNC-3A 1/4" L	NAS1352		0.4-0.5																
	22-25	Screw #4-40 UNC-3A 1/4" L	NAS1352		0.4-0.5																
	22-26	Screw #4-40 UNC-3A 1/4" L	NAS1352		0.4-0.5																
	22-27	Screw #4-40 UNC-3A 1/4" L	NAS1352		0.4-0.5																
	22-28	Screw #4-40 UNC-3A 1/4" L	NAS1352		0.4-0.5																
	22-29	Screw #4-40 UNC-3A 1/4" L	NAS1352		0.4-0.5																

Questo documento contiene informazioni di proprietà di CARLO GAVAZZI SPACE SpA. Tutti i diritti sono riservati.
All information contained in this document are property of CARLO GAVAZZI SPACE SpA. All right reserved.

	22-30	Screw #4-40 UNC-3A 1/4" L	NAS1352		0.4-0.5																
	22-31	Screw #4-40 UNC-3A 1/4" L	NAS1352		0.4-0.5																
	22-32	Screw #4-40 UNC-3A 1/4" L	NAS1352		0.4-0.5																
	22-33	Screw #4-40 UNC-3A 1/4" L	NAS1352		0.4-0.5																
	22-34	Screw #4-40 UNC-3A 1/4" L	NAS1352		0.4-0.5																
	22-35	Screw #4-40 UNC-3A 1/4" L	NAS13 52		0.4-0.5																
	22-36	Screw #4-40 UNC-3A 1/4" L	NAS13 52		0.4-0.5																
23	23-1	Screw #4-40 UNC-3A 1/2" L	NAS1352		0.4-0.5																
	23-2	Screw #4-40 UNC-3A 1/2" L	NAS1352		0.4-0.5																
	23-3	Screw #4-40 UNC-3A 1/2" L	NAS1352		0.4-0.5																
	23-4	Screw #4-40 UNC-3A 1/2" L	NAS1352		0.4-0.5																
	23-5	Screw #4-40 UNC-3A 1/2" L	NAS1352		0.4-0.5																
	23-6	Screw #4-40 UNC-3A 1/2" L	NAS1352		0.4-0.5																
25	25-1	Screw #8-32 UNC-3A 5/8" L	NAS1352		2.3-2.8																
	25-2	Screw #8-32 UNC-3A 5/8" L	NAS1352		2.3-2.8																
	25-3	Screw #8-32 UNC-3A 5/8" L	NAS1352	1.75	2.3-2.8	4.25															
	25-4	Screw #8-32 UNC-3A 5/8" L	NAS1352	0.65	2.3-2.8	3.15															
	25-5	Screw #8-32 UNC-3A 5/8" L	NAS1352	0.80	2.3-2.8	3.30															

Questo documento contiene informazioni di proprietà di CARLO GAVAZZI SPACE SpA. Tutti i diritti sono riservati.
All information contained in this document are property of CARLO GAVAZZI SPACE SpA. All right reserved.

	25-6	Screw #8-32 UNC-3A 5/8" L	NAS1352		2.3-2.8																
	25-7	Screw #8-32 UNC-3A 5/8" L	NAS1352		2.3-2.8																
	25-8	Screw #8-32 UNC-3A 5/8" L	NAS1352	0.70	2.3-2.8	3.2															
	25-9	Screw #8-32 UNC-3A 5/8" L	NAS1352	0.60	2.3-2.8	3.1															
	25-10	Screw #8-32 UNC-3A 5/8" L	NAS1352	0.60	2.3-2.8	3.1															
	25-11	Screw #8-32 UNC-3A 5/8" L	NAS1352		2.3-2.8																
	25-12	Screw #8-32 UNC-3A 5/8" L	NAS1352		2.3-2.8																
	25-13	Screw #8-32 UNC-3A 5/8" L	NAS1352	1.05	2.3-2.8	3.55															
	25-14	Screw #8-32 UNC-3A 5/8" L	NAS1352	1.20	2.3-2.8	3.70															
	25-15	Screw #8-32 UNC-3A 5/8" L	NAS1352	1.25	2.3-2.8	3.75															
	25-16	Screw #8-32 UNC-3A 5/8" L	NAS1352		2.3-2.8																
	25-17	Screw #8-32 UNC-3A 5/8" L	NAS1352		2.3-2.8																
	25-18	Screw #8-32 UNC-3A 5/8" L	NAS1352	1.0	2.3-2.8	3.50															
	25-19	Screw #8-32 UNC-3A 5/8" L	NAS1352	0.85	2.3-2.8	3.35															
	25-20	Screw #8-32 UNC-3A 5/8" L	NAS1352	1.10	2.3-2.8	3.60															
26	26-1	Screw #8-32 UNC-3A 7/8" L	NAS1352		2.3-2.8																
	26-2	Screw #8-32 UNC-3A 7/8" L	NAS1352		2.3-2.8																
28	28-1	Screw #10-32 UNF-3A 5/8" L	NAS1351		2.3-2.8																

Questo documento contiene informazioni di proprietà di CARLO GAVAZZI SPACE SpA. Tutti i diritti sono riservati.
All information contained in this document are property of CARLO GAVAZZI SPACE SpA. All right reserved.

	28-2	Screw #10-32 UNF-3A 5/8" L	NAS1351		2.3-2.8																
	28-3	Screw #10-32 UNF-3A 5/8" L	NAS1351		2.3-2.8																
	28-4	Screw #10-32 UNF-3A 5/8" L	NAS1351		2.3-2.8																
	28-5	Screw #10-32 UNF-3A 5/8" L	NAS1351		2.3-2.8																
	28-6	Screw #10-32 UNF-3A 5/8" L	NAS1351		2.3-2.8																
	28-7	Screw #10-32 UNF-3A 5/8" L	NAS1351		2.3-2.8																
	28-8	Screw #10-32 UNF-3A 5/8" L	NAS1351		2.3-2.8																
29	29-1	Screw #4-40 UNc-3A 5/8" L	NAS1352	N/A	0.4-0.5																
	29-2	Screw #4-40 UNc-3A 5/8" L	NAS1352	N/A	0.4-0.5																
	29-3	Screw #4-40 UNc-3A 5/8" L	NAS1352	N/A	0.4-0.5																

Table 7-1 Screw torque log sheet

Questo documento contiene informazioni di proprietà di CARLO GAVAZZI SPACE SpA. Tutti i diritti sono riservati.
All information contained in this document are property of CARLO GAVAZZI SPACE SpA. All right reserved.