CARLO GAVAZZI SPACE SpA	AMS02 - TCS

Tipo Doc.: *Doc.Type:*	PROCEDURE			N° DRD: *DRD N°:*	NA
N° Doc.: *Doc. N°:*	AMSTCS-PR-CGS-005	Ediz.: *Issue:* 1	Data: *Date:* 24/10/2007	Pagina *Page* 1	Di *Of* 30
Titolo : *Title :*	AMS02 E-CRATE MECHANICAL ASSEMBLY PROCEDURE				

	Nome & Funzione *Name & Function*	Firma *Signature*	Data *Date*
Preparato da: *Prepared by:*	Di Marino C. (DT/MT)		30/10/07
Approvato da: *Approved by:*	Molina M. (DT/MT)		30/10/07
	Vettore C. (DT/MT)		30/10/07
	Cremonesi L. (PA/QA)		30.10.07
	Cinquepalmi C. (PC/CC)		30.10.07
Applicazione autorizzata da: *Application authorized by:*	Olivier M. (DT/MT)		30/10/07
Customer / Higher Level Contractor			
Accettato da: *Accepted by:*			
Approvato da: *Approved by:*			

LISTA DI DISTRIBUZIONE *DISTRIBUTION LIST*	N	A	I
Interna / *Internal*			
Esterna / *External*			

N=Numero di copie A=Applicazione I=Informazione
N=Number of copy A=Application I=Information

Gestione documenti: *Data Management:* Firma / *Signature* Data / *Date* 30.10.07	File: AMSTCS-PR-CGS-005 Issue 1.doc

Questo documento contiene informazioni di proprietà di CARLO GAVAZZI SPACE SpA: Tutti i diritti sono riservati
All information contained in this document are property of CARLO GAVAZZI SPACE SpA. All right reserved.

REGISTRAZIONE DELLE MODIFICHE / *CHANGE RECORD*

EDIZIONE *ISSUE*	DATA *DATE*	AUTORIZZAZIONE *CHANGE AUTHORITY*	OGGETTO DELLA MODIFICA E SEZIONI AFFETTE *REASON FOR CHANGE AND AFFECTED SECTIONS*
1	24/10/2007		First issue

Questo documento contiene informazioni di proprietà di CARLO GAVAZZI SPACE SpA. Tutti i diritti sono riservati.
All information contained in this document are property of CARLO GAVAZZI SPACE SpA. All right reserved.

LISTA DELLE PAGINE VALIDE / *LIST OF VALID PAGES*

PAGINA *PAGE*	EDIZIONE *ISSUE*	PAGINA *PAGE*	EDIZIONE *ISSUE*	PAGINA *PAGE*	EDIZIONE *ISSUE*	PAGINA *PAGE*	EDIZIONE *ISSUE*	PAGINA *PAGE*	EDIZIONE *ISSUE*
1 - 30	1								

Questo documento contiene informazioni di proprietà di CARLO GAVAZZI SPACE SpA. Tutti i diritti sono riservati.
All information contained in this document are property of CARLO GAVAZZI SPACE SpA. All right reserved.

TABLE OF CONTENT

1. SCOPE 5
1.1 LIST OF ACRONYMS 5
2. DOCUMENTS 7
2.1 REFERENCE DOCUMENTS 7
3. DESCRIPTION OF E-CRATE 8
4. REQUIREMENTS / CONDITIONS 19
4.1 REQUIRED DOCUMENTS/ TOOLS 19
4.2 HARDWARE PROTECTION 19
4.3 PRODUCT ASSURANCE 20
4.4 ENVIRONMENTAL CONDITIONS 20
4.5 PERSONNEL 20
5. ORGANIZATION OF INTEGRATION 20
5.1 RISKS 20
5.2 STAFF/RESPONSABILITIES 20
5.3 INTEGRATION INSTRUCTIONS 20
5.4 SPECIAL MEASURES 20
6. STEP-BY STEP ASSEMBLY SEQUENCE 21
6.1 E-CRATE INTEGRATION ON THE LUSS 22
7. SCREW TORQUE LOG SHEET 23

LIST OF FIGURES

Figure 3-1: E-CRATE exploded view 8
Figure 3-2: E-CRATE boards location 9
Figure 3-3: E-CRATE support plate integration 10
Figure 3-4: E-CRATE integration on the USS 11
Figure 3-5: BP Joints 13
Figure 3-6: Back Cover Joints 14
Figure 3-7: Support Plate Joints 15
Figure 3-8: Support Plate assembled to E crate – Top View 16
Figure 3-9: Main Wall Lower Joints 16
Figure 3-10: Main Wall Upper Joints 17
Figure 3-11: Top View 18

Questo documento contiene informazioni di proprietà di CARLO GAVAZZI SPACE SpA. Tutti i diritti sono riservati.
All information contained in this document are property of CARLO GAVAZZI SPACE SpA. All right reserved.

1. SCOPE

The document present the technical aspects for the assembly and integration of the E-crate unit. It has been reported the E-crate brief description, the assembly sequence, the integration on the USS sequence and mainly the screw torque indication.

1.1 LIST OF ACRONYMS

A
ABCL As-Built Configuration data List
ADP Acceptance Data Package
AR Acceptance Review
ATP Authorization To Proceed

B
BC Back Cover
BP Back Panel

C
CAD Computer Aided Design
CDR Critical Design Review
CGS Carlo Gavazzi Space
CI Configuration Item
CIDL Configuration Item data List

D
DRD Document Requirements Description

E
EGSE Electrical Ground Support Equipment
EM Engineering Model

F
FEM Finite Element Model
FFMAR Final Flight Model Acceptance Review
FM Flight Model

G
GSE Ground Support Equipment

H
HW Hardware

I
ICD Interface Control Document
I/F Interface
ISS International Space Station

J
JSC Johnson Space Center

K
KSC Kennedy Space Center

L
LUSS Lower Unique Support Structure

M

N
NA Not Applicable

Questo documento contiene informazioni di proprietà di CARLO GAVAZZI SPACE SpA. Tutti i diritti sono riservati.
All information contained in this document are property of CARLO GAVAZZI SPACE SpA. All right reserved.

NASA	National Aeronautics and Space Administration
NCR	Non Conformance Report
NRB	Non-conformance Review Board
NSTS	National Space Transportation System (Shuttle)

O

P

PA	Product Assurance
PCB	Printed Circuit Board
PDR	Preliminary Design Review
P/F	Pass/Failed

Q

QM	Qualification Model

R

RFD	Request For Deviation
RFW	Request For Waiver

S

STS	Space Transportation System (Shuttle)
SW	Software

T

TBC	To Be Confirmed
TBD	To Be Defined
TRB	Test Review Board
TRR	Test Readiness Review

U

USS	Unique Support Structure

Questo documento contiene informazioni di proprietà di CARLO GAVAZZI SPACE SpA. Tutti i diritti sono riservati.
All information contained in this document are property of CARLO GAVAZZI SPACE SpA. All right reserved.

2. DOCUMENTS

2.1 REFERENCE DOCUMENTS

RD	Doc. Number	Issue	Date	Title
1	AMS02-PR-CGS-003	1	17/07/2007	AMS02 E-CRATE MECHANICAL INTEGRATION PROCEDURE

Table 2-1: Reference Documents

See also Table 4-1: E-crate drawing status

Questo documento contiene informazioni di proprietà di CARLO GAVAZZI SPACE SpA. Tutti i diritti sono riservati.
All information contained in this document are property of CARLO GAVAZZI SPACE SpA. All right reserved.

3. DESCRIPTION OF E-CRATE

The following pictures show the E-crate main parts and the electronic board accommodation inside the unit.

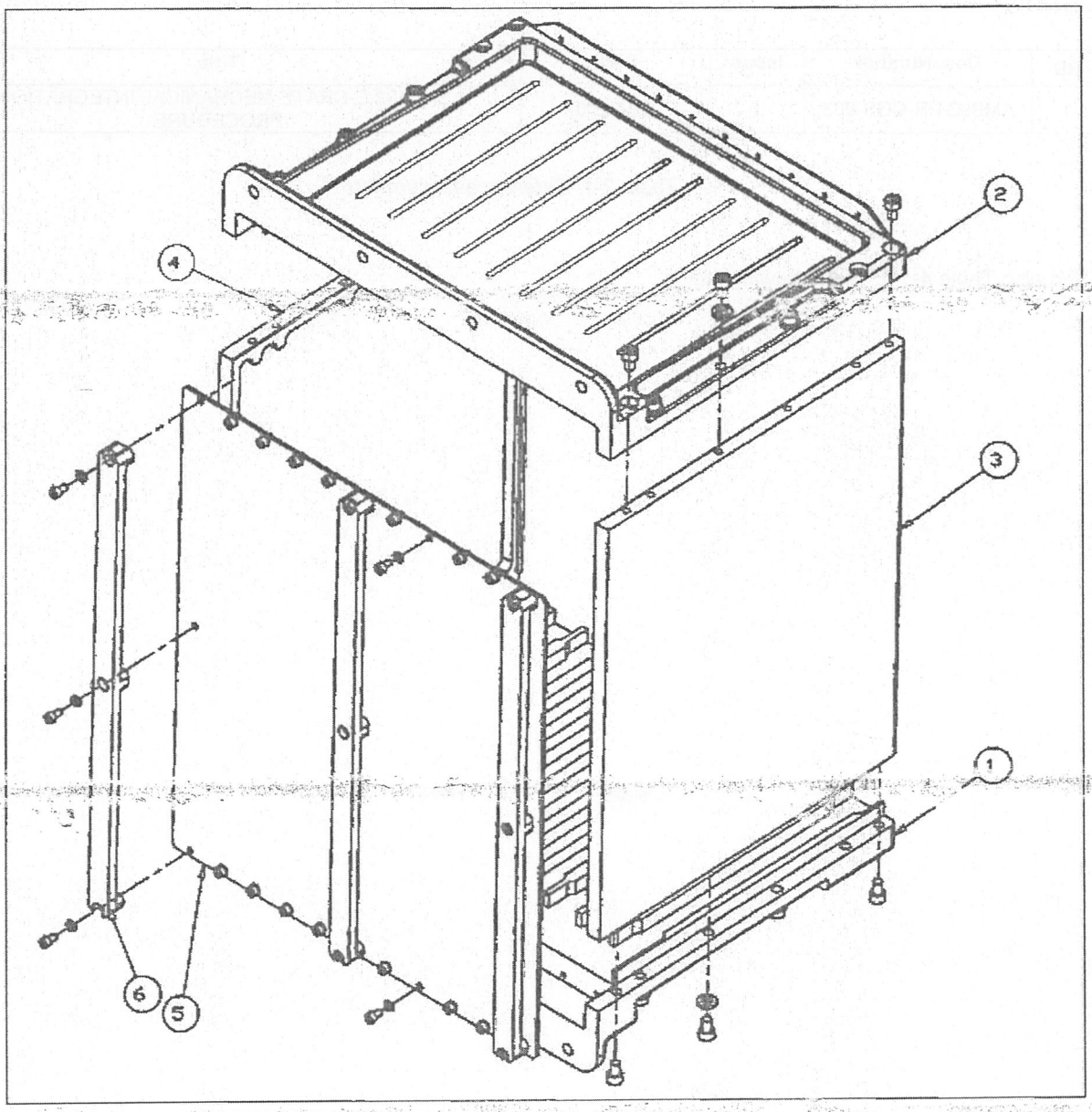

Figure 3-1: E-CRATE exploded view

Questo documento contiene informazioni di proprietà di CARLO GAVAZZI SPACE SpA. Tutti i diritti sono riservati.
All information contained in this document are property of CARLO GAVAZZI SPACE SpA. All right reserved.

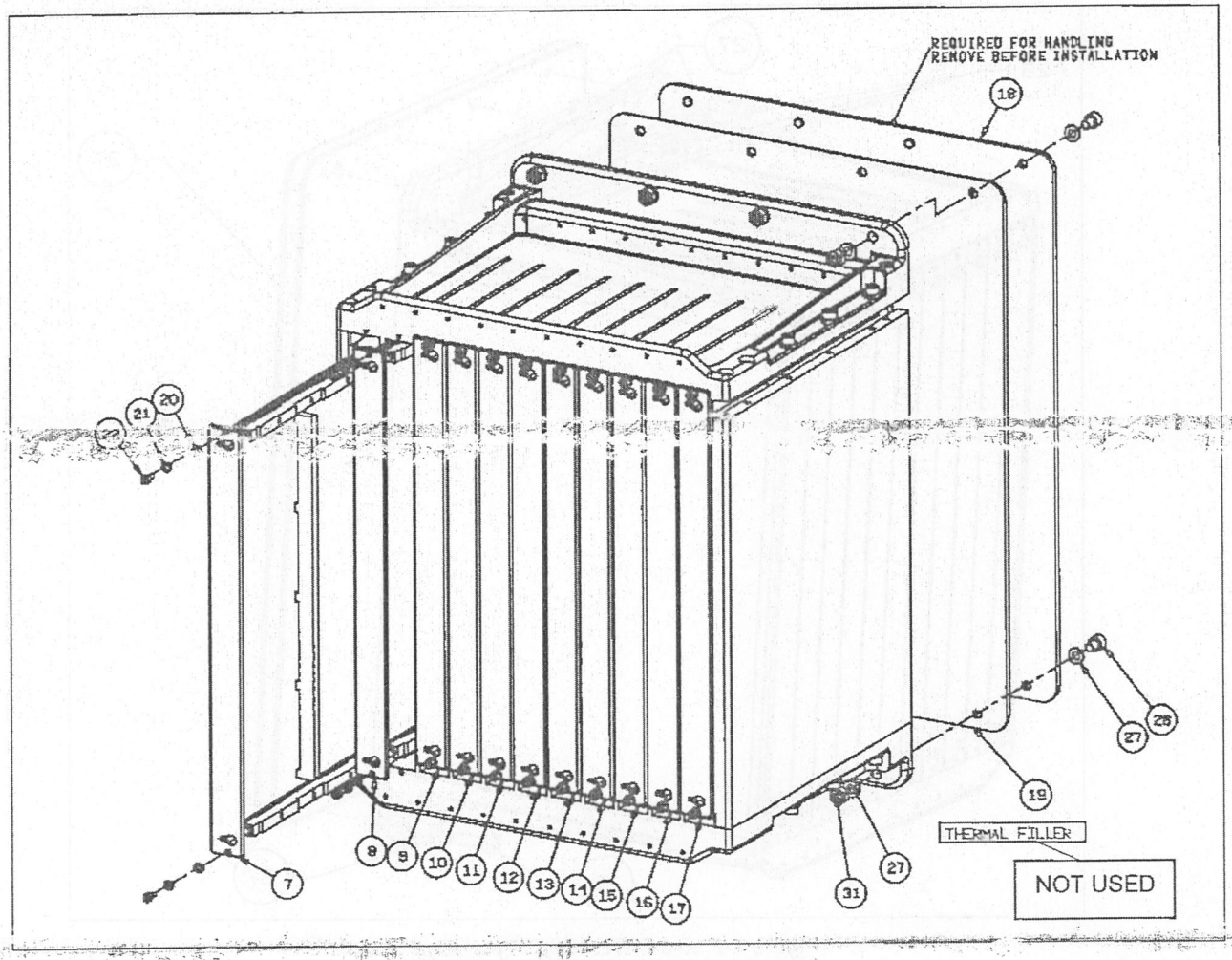

Figure 3-2: E-CRATE boards location

NOTE1: Bottom Cover (BC) required for handling: remove before installation on main radiators
NOTE2: For handling fix the BC to main walls using only 4screws (2per sides) using an alternate pattern and apply torque value 2.485 Nm plus locking element value.
NOTE3: ITEM 19 thermal filler NOT USED

Questo documento contiene informazioni di proprietà di CARLO GAVAZZI SPACE SpA. Tutti i diritti sono riservati.
All information contained in this document are property of CARLO GAVAZZI SPACE SpA. All right reserved.

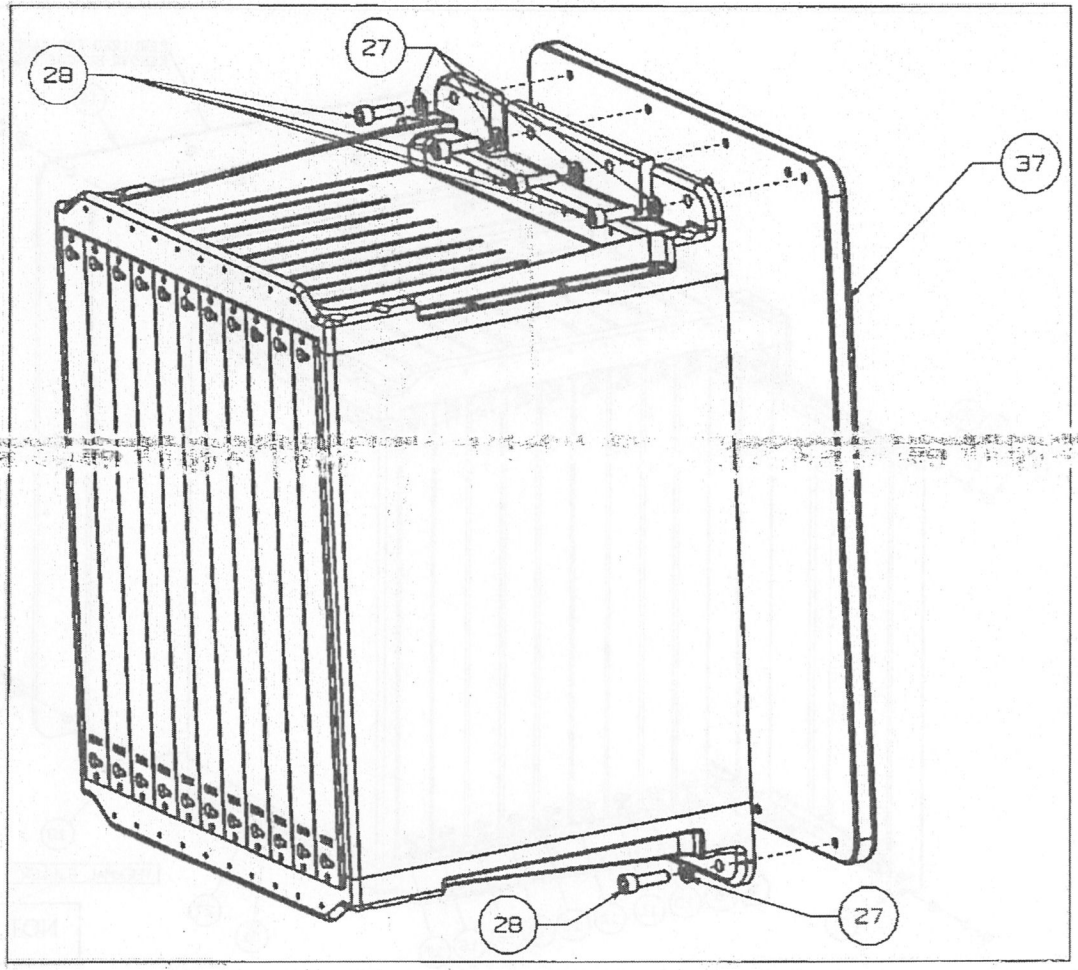

Figure 8-8: E-CRATE support plate integration

Questo documento contiene informazioni di proprietà di CARLO GAVAZZI SPACE SpA. Tutti i diritti sono riservati.
All information contained in this document are property of CARLO GAVAZZI SPACE SpA. All right reserved.

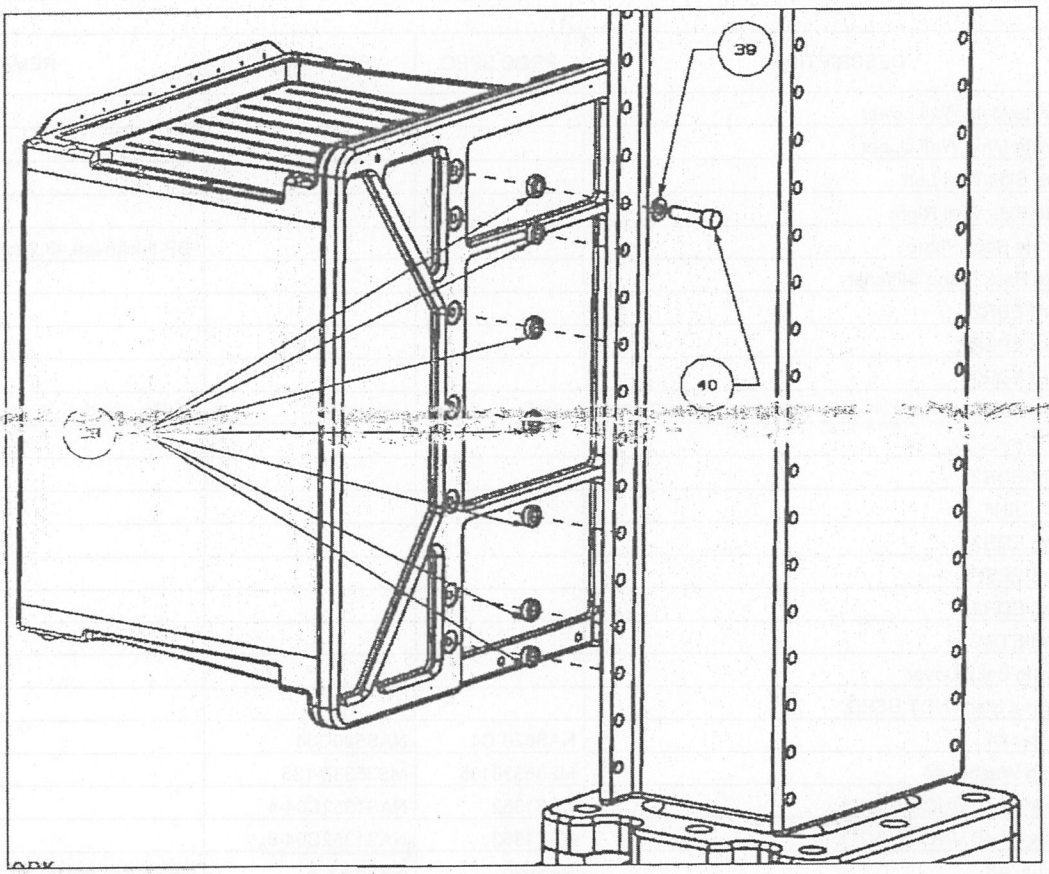

Figure 3-4: E-CRATE integration on the USS

Questo documento contiene informazioni di proprietà di CARLO GAVAZZI SPACE SpA. Tutti i diritti sono riservati.
All information contained in this document are property of CARLO GAVAZZI SPACE SpA. All right reserved.

The table below provide a list of the main part of E-crate and the electronic board installed:

ITEM	DESCRIPTION	PROC.SPEC	P/N-ID.CODE	REMARKS
1	E Crate Main Wall Lower			
2	E Crate Main Wall Upper			
3	Crate Side Wall Left			
4	Crate Side Wall Right			
5	E Crate Back Plane			BP thickness =3.2mm
6	Crate Back Plane Stiffener			
7	Board EDR2			
8	Board EPSFE			
9	Board EDR2			
10	Board EDR2			EDR2
11	Board EPSFE			
12	Board EDR2			
13	Board JINF			
14	Board EDR2			
15	Board EPSFE			
16	Board EDR2			
17	Board ETRG			
18	E Crate Back Cover			
19	Thermal filler - NOT USED			
20	Washer #4	NAS620-C4	NAS620C04	
21	Spring Washer #4	MS35338135	MS35338-135	
22	Screw #4-40 UNC-3A 1/4" L	NAS1352	NAS1352C04-4	
23	Screw #4-40 UNC-3A 1/2" L	NAS1352	NAS1352C04-8	
24	Washer #8	NAS620	NAS620C8	NASA PROVIDED FOR FM/FS MODEL
25	Screw #8-32 UNC-3A 5/8" L	NAS1352	NAS1352N08-10	NASA PROVIDED FOR FM/FS MODEL
26	Screw #8-32 UNC-3A 1/2" L	NAS1352	NAS1352N08-8	NASA PROVIDED FOR FM/FS MODEL
27	Washer #10	NAS620	NAS620C10	NASA PROVIDED FOR FM/FS MODEL
28	Screw #10-32 UNF-3A 5/8" L	NAS1351	NAS1351-N3-10	NASA PROVIDED FOR FM/FS MODEL
29	Screw #4-40 UNC-3A 5/8" L	NAS1352	NAS1352-C04-6	
31	Nut #10	MS35649-204		
32	HeliCoil 4-40 UNC L=1D Self Locking	MS21209	MS21209C04-10	
33	HeliCoil 4-40 UNC L=1,5D Self Locking	MS21209	MS21209C04-15	
34	HeliCoil 10-32 UNF L=1.5D Self Locking	MS21209	MS21209F1-15	NASA PROVIDED FOR FM/FS MODEL
35	HeliCoil 10-32 UNF L=1D Self Locking	MS21209	MS21209F1-10	NASA PROVIDED FOR FM/FS MODEL
36	HeliCoil 8-32 UNC L=1.5D Self Locking	MS21209	MS21209C0815	NASA PROVIDED FOR FM/FS MODEL
37	E crate Support Plate			
38	TH washer			
39	Washer #16	NAS620	NAS620C416	NASA PROVIDED FOR FM/FS MODEL
40	Screw # 28 UNF 1/4" L	NAS1351	NAS1351N4-14	NASA PROVIDED FOR FM/FS MODEL
41	Nut #4	MS35649-244	MS35649-244	

Table 3-1: E-CRATE part list

Questo documento contiene informazioni di proprietà di CARLO GAVAZZI SPACE SpA. Tutti i diritti sono riservati.
All information contained in this document are property of CARLO GAVAZZI SPACE SpA. All right reserved.

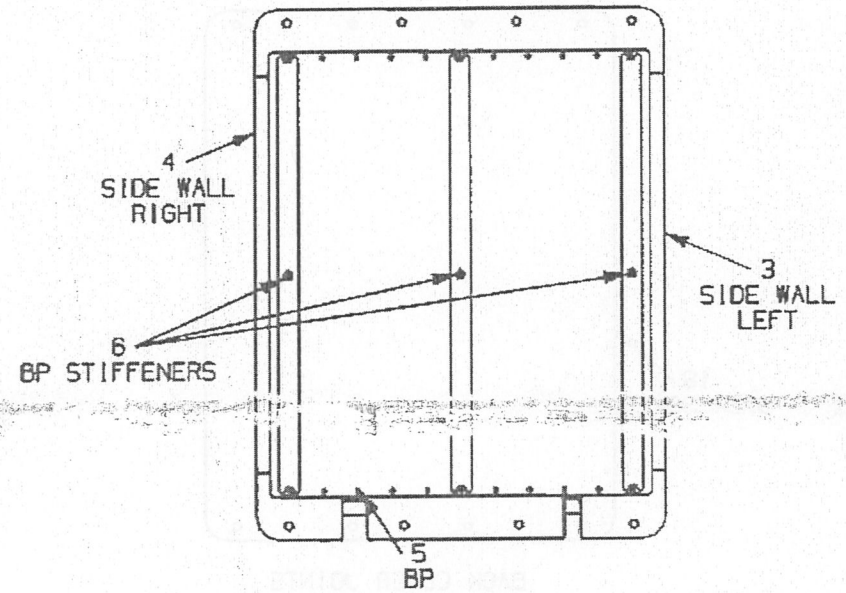

BP JOINTS

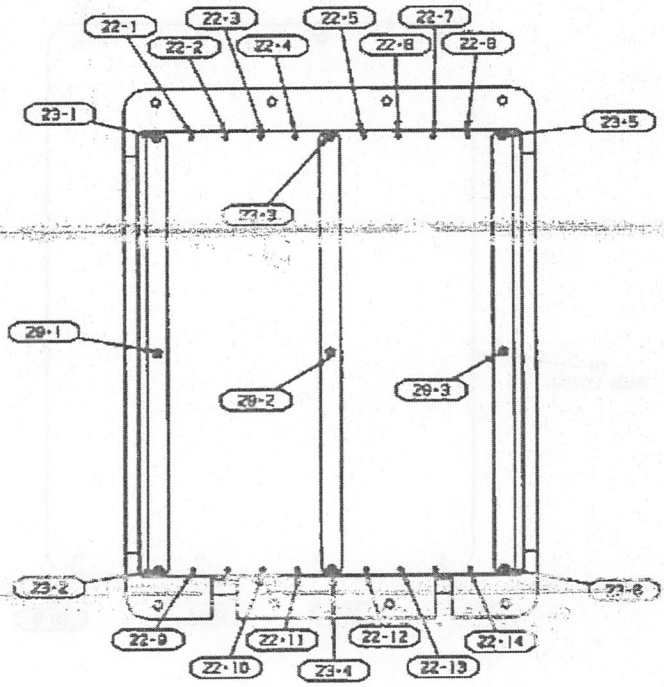

Figure 3-5: BP Joints

Questo documento contiene informazioni di proprietà di CARLO GAVAZZI SPACE SpA. Tutti i diritti sono riservati.
All information contained in this document are property of CARLO GAVAZZI SPACE SpA. All right reserved.

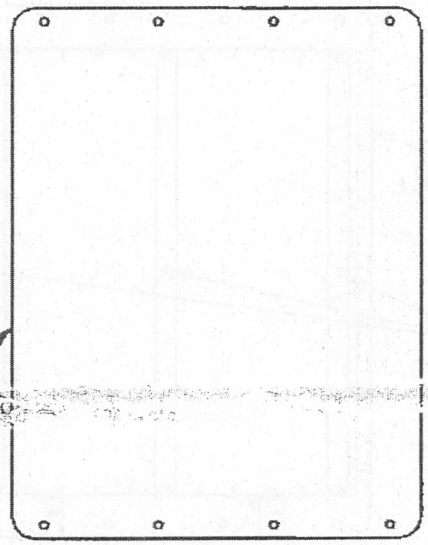

BACK COVER JOINTS

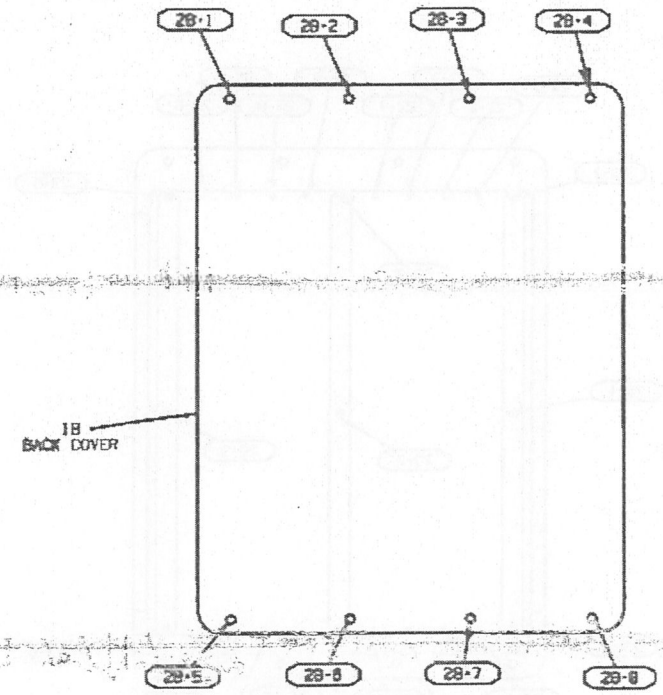

Figure 3-6: Back Cover Joints

Questo documento contiene informazioni di proprietà di CARLO GAVAZZI SPACE SpA. Tutti i diritti sono riservati.
All information contained in this document are property of CARLO GAVAZZI SPACE SpA. All right reserved.

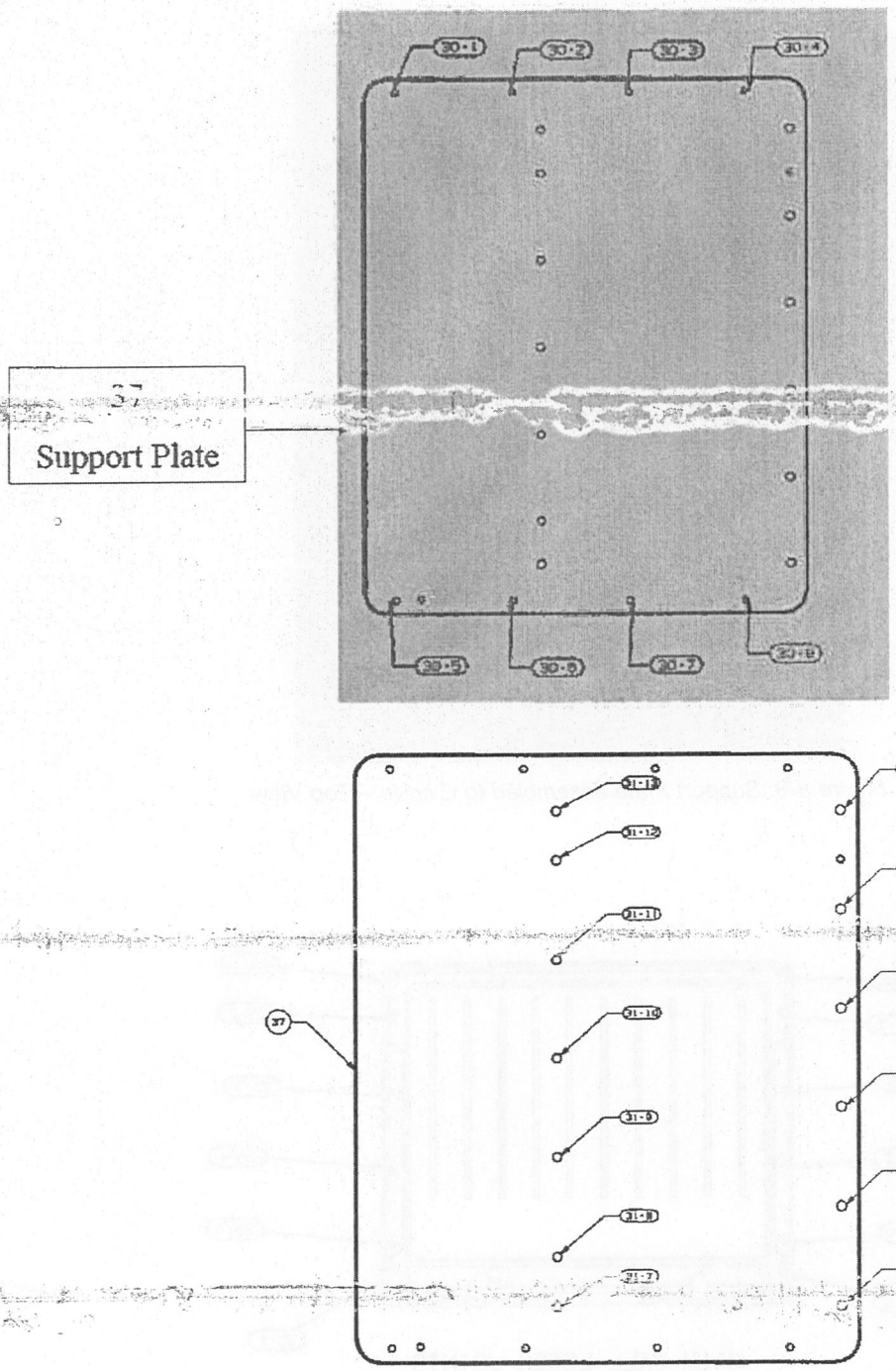

Figure 3-7: Support Plate Joints

Parts marked with 28-xx and parts marked with 30-xx are referring to same item 28. 28-xx are referring to test configuration while 30-xx are referring to flight components, that's why they have different values of tight torque as shown in **screw torque log sheet.**

Questo documento contiene informazioni di proprietà di CARLO GAVAZZI SPACE SpA. Tutti i diritti sono riservati.
All information contained in this document are property of CARLO GAVAZZI SPACE SpA. All right reserved.

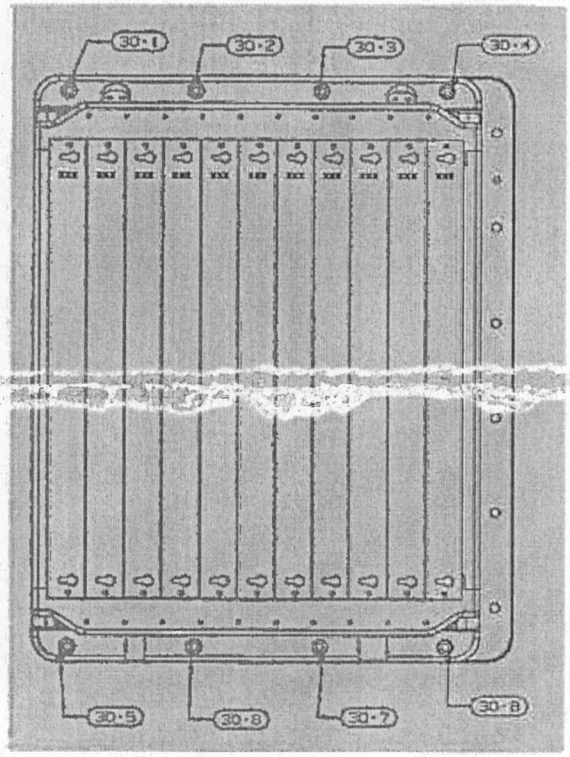

Figure 3-8: Support Plate assembled to E crate – Top View

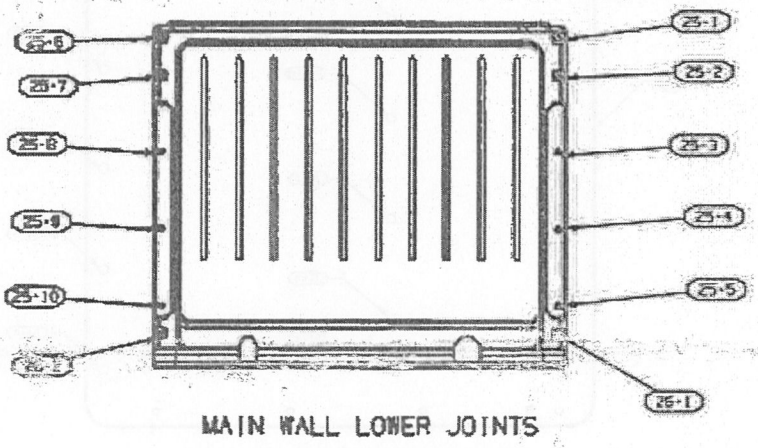

Figure 3-9: Main Wall Lower Joints

Questo documento contiene informazioni di proprietà di CARLO GAVAZZI SPACE SpA. Tutti i diritti sono riservati.
All information contained in this document are property of CARLO GAVAZZI SPACE SpA. All right reserved.

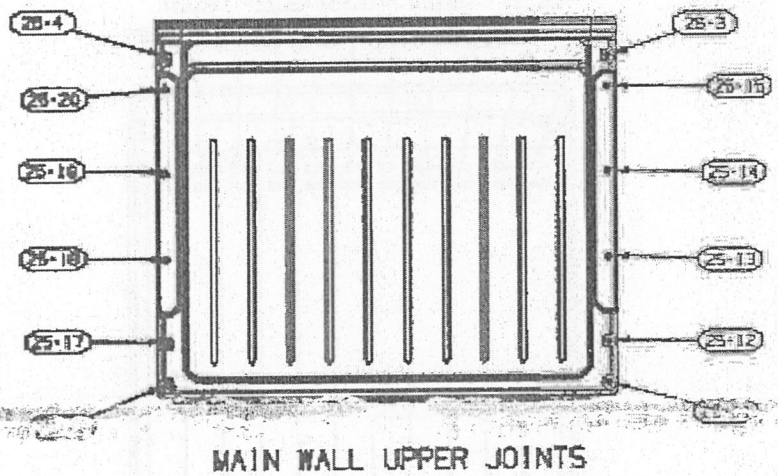

Figure 3-10: Main Wall Upper Joints

Questo documento contiene informazioni di proprietà di CARLO GAVAZZI SPACE SpA. Tutti i diritti sono riservati.
All information contained in this document are property of CARLO GAVAZZI SPACE SpA. All right reserved.

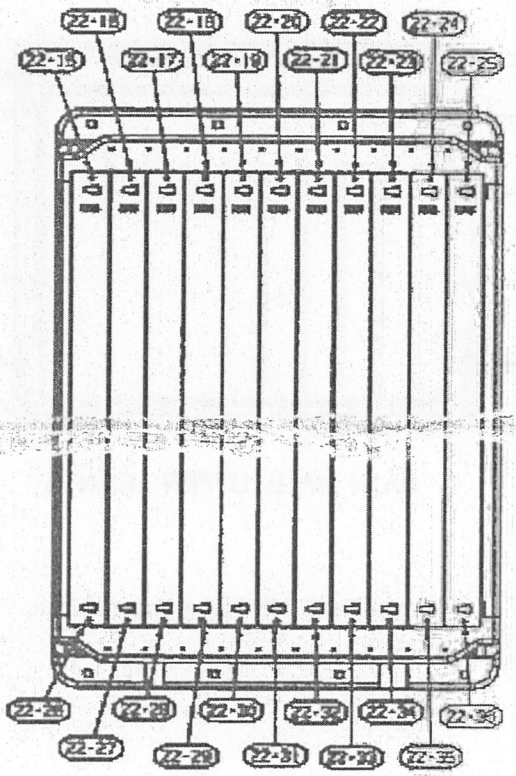

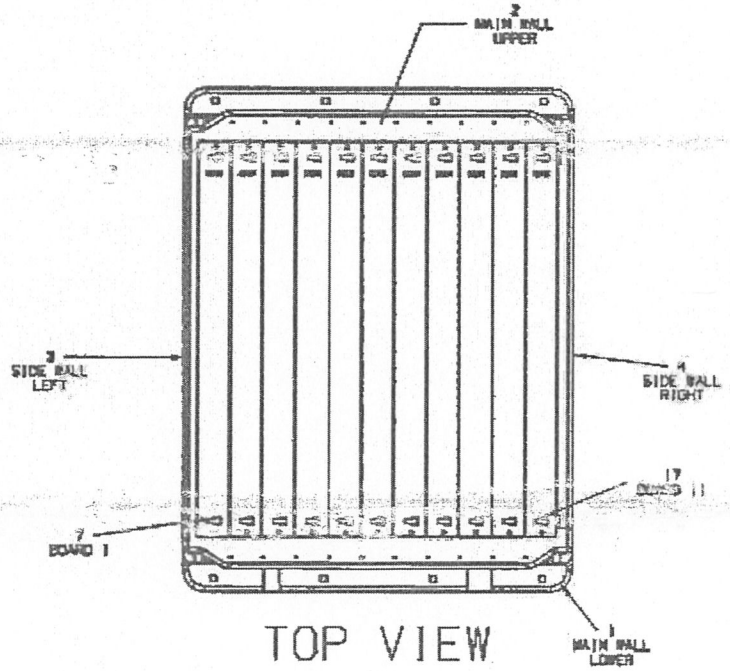

Figure 3-11: Top View

Questo documento contiene informazioni di proprietà di CARLO GAVAZZI SPACE SpA. Tutti i diritti sono riservati.
All information contained in this document are property of CARLO GAVAZZI SPACE SpA. All right reserved.

4. REQUIREMENTS / CONDITIONS

4.1 REQUIRED DOCUMENTS/ TOOLS

The assembly activities are based on integration drawings here below reported for reference:

AMS02 - CRATES DRAWING STATUS : E -ERPD						
IS IT A MECHANICAL PART?	DRW Number	REV	DRW Title	CGS ECO	NCR	STATUS
					E CRATE	
N	24-AMS-110.00.10	REV.J	E Crate ASSY			NOT OK : BP JOINTS,BOTTOM COVER INTEGRATION NOTES, NEW TORQUE VALUES
N	24-AMS-110.01.10	REV.J	E Crate Part List			NOT OK : general update of part list
N	24-AMS-110.02.10	REV.A	E Crate BackPlane			OK (if necessary integration problems) cut 0.05mm on both edges (length reduced by0.1mm)
Y	24-AMS-110.03.10	REV.J	E crate Main Wall LOWER			NOT OK : CABLE SLOT ROUND EDGES
Y	24-AMS-110.04.10	REV.J	E Side Wall LEFT			OK
Y	24-AMS-110.05.10	REV.J	E Side Wall RIGHT			OK
Y	24-AMS-110.08.10	REV.J	E Crate Back Cover			OK
Y	24-AMS-110.09.10	REV.J	Ecrate Main Wall UPPER			OK
					CRATES COMMON PARTS	
Y	24-AMS-110.06.00	REV.J	Crate BackPlane Stiffener			OK
Y	24-AMS-111.03.96	REV.A	Board Front Panel Standard	00025		OK
Y	24-AMS-111.03.97	REV.A	Board Front Panel Double SS	00025		OK
Y	24-AMS-111.03.98	REV.A	Board Front Panel Double CS	00025		OK
Y	24-AMS-111.03.99	REV.A	Board Front Panel Standard	00025		OK
Y	24-AMS-111.04.00		Board Spacer Component Side (CS)			OK
Y	24-AMS-111.05.00		Board Spacer Solder Side (SS)			OK
Y	24-AMS-111.06.00		Board Stiffener			OK

Table 4-1: E-crate drawing status

In general standard tools will be used according to the definitions in manufacturing and integration procedures. All tools which need calibration will be controlled by means of calibration lists and stickers on the tools.

Tool/Equipment	Requirements	Intended Application
Tools/calibrated drills	suitable for required fasteners	Install fasteners during assembly
Torque Wrenches	suitable for the required torque ranges	Torquing of joint bolts
Caliper Rules/ Depth Gages	Suitable for the to be verified/adjusted assy and I/F dimensions	Dimension measurement

Table 4-2: Required Tools

Where ever special tools are required, this will be defined in the regarding procedures.

4.2 HARDWARE PROTECTION

Protective devices (e.g. protective caps, connectors savers etc.) will be used to ensure that no damage of the H/W will lead the degradation of the items.

Questo documento contiene informazioni di proprietà di CARLO GAVAZZI SPACE SpA. Tutti i diritti sono riservati.
All information contained in this document are property of CARLO GAVAZZI SPACE SpA. All right reserved.

4.3 PRODUCT ASSURANCE

As a result of the design and development phase some safety aspects concerning qualification tests will be verified during integration and test to close the associated hazards of system safety analysis. Identified critical processes, functions and safety significant operations will be controlled by PA personnel during the activities.

4.4 ENVIRONMENTAL CONDITIONS

All assembly activities will be performed in dedicated facilities at an ambient temperature of 20°± 5°C. This is also the reference temperature for the manufacturing process.
It is important to perform the assembly activities at this specified temperature to prevent the generation of constraints and there-by built-in stresses. Recording of the ambient temperature during the dimensional verification is mandatory.

4.5 PERSONNEL

For all processes and activities where it is required (e.g. crimping, soldering etc.), only properly trained personnel will perform the work.

5. ORGANIZATION OF INTEGRATION

The integration steps are put into chronological order, according to strategies, risks, and other marginal conditions :

Production control is performed after a manufacturing release; each single selfstanding item is inspected and documented on an inspection record. All materials for such items will be controlled beginning with the raw material manufacturing, during storage and until final manufacturing.
The main phases of the integration process are:

0. Preliminary phase
1. Pre-assembly phase for main chassis
2. Insert of the electronic boards
3. Final assembly of the complete structure inclusive all subassemblies
4. E crate Support Plate integration
5. E crate LUSS integration

Chapter 6 of this document provide the step-by step Assembly plan in form of Task sheets which describe each assembly sequence in detail and require all intermediate assembly inspections, measurements, also.

5.1 RISKS

If a special integration step happens to be risky the possibly existing problems and counter-measures have to be documented (e. g. danger for hardware during interaction with faulty software while no protection measures have been taken).
Non Conformance Reports (NCRs) are raised for all measurements values out of specified ranges and classified for minor/Major severity. A Review Board is to decide on the suggested recovery actions for the non conformances.

5.2 STAFF/RESPONSABILITIES

The organizational units/instances are allocated responsibilities within the scope of the integration (supervision of the time schedule, realization of certain integration steps, quality assurance measures, etc.).

5.3 INTEGRATION INSTRUCTIONS

The technical instructions have to be generated on the basis of the integration strategies and marginal conditions. This includes procedures for the assembly of products as well as instructions for the integration equipment.

5.4 SPECIAL MEASURES

Questo documento contiene informazioni di proprietà di CARLO GAVAZZI SPACE SpA. Tutti i diritti sono riservati.
All information contained in this document are property of CARLO GAVAZZI SPACE SpA. All right reserved.

Each screw torque shall be verified and record into the **screw torque log sheet**

6. STEP-BY STEP ASSEMBLY SEQUENCE

0 Preliminary phase					
step	**Activity description**	**P/F**	**Date**	**Sign.**	**Stamp**
0.1	Prior to start of any assembly activity make sure that: All the E-crate parts (aluminium wall, e-boards, screw, washer ecc) are available according to the E-crate part list The required tools and equipments are available. Especially observe the calibration status of measuring and safety relevant equipment. If recalibration is necessary do not proceed until the tool is ready to be used.				
0.2	Record type and calibration data of tools and devices				
1 Pre-assembly phase					
step	**Activity description**	**P/F**	**Date**	**Sign.**	**Stamp**
1.1	Individuate the proper screw and washer necessary to assembly the E-crate chassis and verify the screw torque on the **screw torque log sheet**				
1.2	According to the chapter 3 assembly the E-crate walls (see part list ITEM 1,2,3 and 4).				
1.3	Record the screw torque applied in the **screw torque log sheet**				
1.4	Verify the assembly tolerances and IF				
1.5	Individuate the proper screw and washer necessary to assembly the E-crate Back-Plane (BP) item5 and BP stiffener item6 and verify the screw torque on the **screw torque log sheet**				
1.6	assembly the E-crate BP and BP stiffener according to Figure 3-5 to the E-crate chassis **NOTE: use with washer item 20 only if BP thickness is less then 3.2 mm for joints 22-X and 23-X.**				
1.7	Record the screw torque applied in the **screw torque log sheet**				
1.8	Verify the assembly tolerances and IF for the e-boards installation				
2 Electronic boards insertion					
step	**Activity description**	**P/F**	**Date**	**Sign.**	**Stamp**
2.1	Verify that each single e-boards sub-assembly is ready to be inserted into the E-crate chassis. All the part of the sub-assembly shall be suitable fixed and verified.				
2.2	Individuate the proper tools, screw and washer necessary to insert the e-boards and verify the screw torque on the **screw torque log sheet**				
2.3	Insert the single boards with care in order to avoid any damage				
2.4	Apply a torque of 0.68 (± 5%) Nm to the card-retainer screw and the to the screw for board fixation to main walls.				
2.5	Record the final value on the **screw torque log sheet**				
3 Assembly for handling configuration					
step	**Activity description**	**P/F**	**Date**	**Sign.**	**Stamp**
3.1	Verify the assembly, the tolerance and the IFs.				
3.2	Individuate the proper screw and washer necessary to assembly the E-crate Back-Cover (BC).				
3.3	Apply the Back-Cover item 18. Thermal filler item 19 NOT USED				
3.4	According to Figure 3-2 assembly the item taking into account the notes of Figure 3-2.				

Table 6-1: STEP_BY_STEP Assembly sequence

Questo documento contiene informazioni di proprietà di CARLO GAVAZZI SPACE SpA. Tutti i diritti sono riservati.
All information contained in this document are property of CARLO GAVAZZI SPACE SpA. All right reserved.

Once heater has been applied to the Support Plate follow the next steps to close the E crate with the Support Plate.

4 Final integration					
step	**Activity description**	**P/F**	**Date**	**Sign.**	**Stamp**
4.1	Remove the Back-Cover item 18.				
4.2	Fix E-crate Support Plate (SP) to the E-crate using screws item 28 (item group 30-xx) and verify the screw torque on the **screw torque log sheet.**				

Table 6-2: Support Plate Assembly sequence

6.1 E-CRATE INTEGRATION ON THE LUSS

Follow the next step to integrate the E crate on the LUSS.

5 E crate LUSS integration					
step	**Activity description**	**P/F**	**Date**	**Sign.**	**Stamp**
5.1	Individuate the proper screw and washer necessary to integrate the E-crate on the LUSS. Refer to figure 6-1				
5.2	Fix E-crate to the LUSS using screws item 40 and verify the screw torque on the **screw torque log sheet.**				

Table 6-3: LUSS integration sequence

Questo documento contiene informazioni di proprietà di CARLO GAVAZZI SPACE SpA. Tutti i diritti sono riservati.
All information contained in this document are property of CARLO GAVAZZI SPACE SpA. All right reserved.

7. SCREW TORQUE LOG SHEET

ECRATE Ø Fm

ITEM	Screw ID	BOLT type	PROC SPEC	Meas. Running torque [Nm] (*)	Tight. Torque [Nm]	1st Integration			2nd Integ.			3rd Integ.			4th Integ.			5th Integ.		
						Final torque [Nm] = Meas. Running torque + mean tight. Torque	Date	Signature	Final torque [Nm]	Date	Signature	Final torque [Nm]	Date	Signature	Final torque [Nm]	Date	Signature	Final torque [Nm]	Date	Signature
22	22-1	Screw #4-40 UNC-3° 1/4" L	NAS1352	0.19	0.4-0.5	0.64	8/2/08	JM												
	22-2	Screw #4-40 UNC-3° 1/4" L	NAS1352	0.14	0.4-0.5	0.59	"	Fm												
	22-3	Screw #4-40 UNC-3° 1/4" L	NAS1352	0.14	0.4-0.5	0.59	"	Fm												
	22-4	Screw #4-40 UNC-3° 1/4" L	NAS1352	0.15	0.4-0.5	0.60	"	Fm												
	22-5	Screw #4-40 UNC-3° 1/4" L	NAS1352	0.10	0.4-0.5	0.55	"	Fm												
	22-6	Screw #4-40 UNC-3° 1/4" L	NAS1352	0.14	0.4-0.5	0.59	"	Fm												
	22-7	Screw #4-40 UNC-3° 1/4" L	NAS1352	0.21	0.4-0.5	0.66	"	SY												
	22-8	Screw #4-40 UNC-3° 1/4" L	NAS1352	0.16	0.4-0.5	0.61	"	JM												
	22-9	Screw #4-40 UNC-3° 1/4" L	NAS1352	0.17	0.4-0.5	0.62	"	Fm												
	22-10	Screw #4-40 UNC-3° 1/4" L	NAS1352	0.16	0.4-0.5	0.61	"	Fm												

Questo documento contiene informazioni di proprietà di CARLO GAVAZZI SPACE SpA. Tutti i diritti sono riservati.
All information contained in this document are property of CARLO GAVAZZI SPACE SpA. All right reserved.

ITEM	Screw ID	BOLT type	PROC SPEC	Meas. Running torque [Nm] (*)	Tight. Torque [Nm]	1st Integration			2nd Integ.			3rd Integ.			4th Integ.			5th Integ.		
						Final torque [Nm]	Date	Signature	Final torque [Nm]	Date	Signature	Final torque [Nm]	Date	Signature	Final torque [Nm]	Date	Signature	Final torque [Nm]	Date	Signature
22	22-11	Screw #4-40 UNC-3° 1/4" L	NAS1352	0.25	0.4-0.5	0.70	18/2/08	[illegible]												
	22-12	Screw #4-40 UNC-3° 1/4" L	NAS1352	0.21	0.4-0.5	0.66	"	[illegible]												
	22-13	Screw #4-40 UNC-3° 1/4" L	NAS1352	0.21	0.4-0.5	0.66	"	[illegible]												
	22-14	Screw #4-40 UNC-3° 1/4" L	NAS1352	0.23	0.4-0.5	0.68	"	[illegible]												
	22-15	Screw #4-40 UNC-3° 1/4" L	NAS1352		0.4-0.5															
	22-16	Screw #4-40 UNC-3° 1/4" L	NAS1352		0.4-0.5															
	22-17	Screw #4-40 UNC-3° 1/4" L	NAS1352		0.4-0.5															
	22-18	Screw #4-40 UNC-3° 1/4" L	NAS1352		0.4-0.5															
	22-19	Screw #4-40 UNC-3° 1/4" L	NAS1352		0.4-0.5															
	22-20	Screw #4-40 UNC-3° 1/4" L	NAS1352		0.4-0.5															
	22-22	Screw #4-40 UNC-3° 1/4" L	NAS1352		0.4-0.5															
	22-23	Screw #4-40 UNC-3° 1/4" L	NAS1352		0.4-0.5															
	22-24	Screw #4-40 UNC-3° 1/4" L	NAS1352		0.4-0.5															
	22-25	Screw #4-40 UNC-3° 1/4" L	NAS1352		0.4-0.5															

Questo documento contiene informazioni di proprietà di CARLO GAVAZZI SPACE SpA. Tutti i diritti sono riservati.
All information contained in this document are property of CARLO GAVAZZI SPACE SpA. All right reserved.

ITEM	Screw ID	BOLT type	PROC SPEC	Meas. Running torque [Nm] (*)	Tight. Torque [Nm]	1st Integration			2nd Integ.			3rd Integ.			4th Integ.			5th Integ.		
						Final torque [Nm]	Date	Signature	Final torque [Nm]	Date	Signature	Final torque [Nm]	Date	Signature	Final torque [Nm]	Date	Signature	Final torque [Nm]	Date	Signature
22	22-26	Screw #4-40 UNC-3° 1/4" L	NAS1352		0.4-0.5															
	22-27	Screw #4-40 UNC-3° 1/4" L	NAS1352		0.4-0.5															
	22-28	Screw #4-40 UNC-3° 1/4" L	NAS1352		0.4-0.5															
	22-29	Screw #4-40 UNC-3° 1/4" L	NAS1352		0.4-0.5															
	22-30	Screw #4-40 UNC-3° 1/4" L	NAS1352		0.4-0.5															
	22-31	Screw #4-40 UNC-3° 1/4" L	NAS1352		0.4-0.5															
	22-32	Screw #4-40 UNC-3° 1/4" L	NAS1352		0.4-0.5															
	22-33	Screw #4-40 UNC-3° 1/4" L	NAS1352		0.4-0.5															
	22-34	Screw #4-40 UNC-3° 1/4" L	NAS1352		0.4-0.5															
	22-35	Screw #4-40 UNC-3° 1/4" L	NAS1352		0.4-0.5															
	22-36	Screw #4-40 UNC-3° 1/4" L	NAS1352		0.4-0.5															
23	23-1	Screw #4-40 UNC-3° 1/2" L	NAS1352	0.09	0.4-0.5	0.53	18/12/08	[illegible]												
	23-2	Screw #4-40 UNC-3° 1/2" L	NAS1352	0.09	0.4-0.5	0.53	"	[illegible]												
	23-3	Screw #4-40 UNC-3° 1/2" L	NAS1352	0.11	0.4-0.5	0.56	"	[illegible]												

Questo documento contiene informazioni di proprietà di CARLO GAVAZZI SPACE SpA. Tutti i diritti sono riservati.
All information contained in this document are property of CARLO GAVAZZI SPACE SpA. All right reserved.

ITEM	Screw ID	BOLT type	PROC SPEC	Meas. Running torque [Nm] (*)	Tight. Torque [Nm]	1st Integration			2nd Integ.			3rd Integ.			4th Integ.			5th Integ.		
						Final torque [Nm]	Date	Signature	Final torque [Nm]	Date	Signature	Final torque [Nm]	Date	Signature	Final torque [Nm]	Date	Signature	Final torque [Nm]	Date	Signature
23	23-4	Screw #4-40 UNC-3° 1/2" L	NAS1352	0.08	0.4-0.5	0.53	18/02/08	[illegible]												
	23-5	Screw #4-40 UNC-3° 1/2" L	NAS1352	0.10	0.4-0.5	0.55	"	[illegible]												
	23-6	Screw #4-40 UNC-3° 1/2" L	NAS1352	0.08	0.4-0.5	0.53	"	[illegible]												
25	25-1	Screw #8-32 UNC-3° 5/8" L	NAS1352	1.10	2.3-2.8	3.70	"	[illegible]												
	25-2	Screw #8-32 UNC-3° 5/8" L	NAS1352	1.30	2.3-2.8	3.80	"	[illegible]												
	25-3	Screw #8-32 UNC-3° 5/8" L	NAS1352	1.25	2.3-2.8	3.75	"	[illegible]												
	25-4	Screw #8-32 UNC-3° 5/8" L	NAS1352	1.25	2.3-2.8	3.75	"	[illegible]												
	25-5	Screw #8-32 UNC-3° 5/8" L	NAS1352	1.25	2.3-2.8	3.75	"	[illegible]												
	25-6	Screw #8-32 UNC-3° 5/8" L	NAS1352	1.40	2.3-2.8	3.90	"	[illegible]												
	25-7	Screw #8-32 UNC-3° 5/8" L	NAS1352	1.25	2.3-2.8	3.75	"	[illegible]												
	25-8	Screw #8-32 UNC-3° 5/8" L	NAS1352	1.15	2.3-2.8	3.65	"	[illegible]												
	25-9	Screw #8-32 UNC-3° 5/8" L	NAS1352	1.15	2.3-2.8	3.65	"	[illegible]												
	25-10	Screw #8-32 UNC-3° 5/8" L	NAS1352	1.35	2.3-2.8	3.85	"	[illegible]												
	25-11	Screw #8-32 UNC-3° 5/8" L	NAS1352	1.35	2.3-2.8	3.85	"	[illegible]												

Questo documento contiene informazioni di proprietà di CARLO GAVAZZI SPACE SpA. Tutti i diritti sono riservati.
All information contained in this document are property of CARLO GAVAZZI SPACE SpA. All right reserved.

CARLO GAVAZZI SPACE SpA	AMS02 - TCS AMS02 E-CRATE MECHANICAL ASSEMBLY PROCEDURE	N° Doc: / Doc N°: AMSTCS-PR-CGS-005 Ediz.: / Issue: 1 — Data: / Date: 24/10/2007 Pagina / Page 27 di / of 30 TEST PROCEDURE REFERENCE	N° Doc: / Doc N°: Ediz.: / Issue: — Data: / Date: Pagina / Page di / of TEST REPORT REFERENCE

ITEM	Screw ID	BOLT type	PROC SPEC	Meas. Running torque [Nm] (*)	Tight. Torque [Nm]	1st Integration			2nd Integ.			3rd Integ.			4th Integ.			5th Integ.		
						Final torque [Nm]	Date	Signature	Final torque [Nm]	Date	Signature	Final torque [Nm]	Date	Signature	Final torque [Nm]	Date	Signature	Final torque [Nm]	Date	Signature
25	25-12	Screw #8-32 UNC-3° 5/8" L	NAS1352	1.30	2.3-2.8	3.80	18/02/08	[illegible]												
	25-13	Screw #8-32 UNC-3° 5/8" L	NAS1352	1.15	2.3-2.8	3.65	"	[illegible]												
	25-14	Screw #8-32 UNC-3° 5/8" L	NAS1352	1.05	2.3-2.8	3.55	"	[illegible]												
	25-15	Screw #8-32 UNC-3° 5/8" L	NAS1352	1.10	2.3-2.8	3.60	"	[illegible]												
	25-16	Screw #8-32 UNC-3° 5/8" L	NAS1352	1.35	2.3-2.8	3.85	"	[illegible]												
	25-17	Screw #8-32 UNC-3° 5/8" L	NAS1352	1.45	2.3-2.8	3.95	"	[illegible]												
	25-18	Screw #8-32 UNC-3° 5/8" L	NAS1352	1.05	2.3-2.8	3.55	"	[illegible]												
	25-19	Screw #8-32 UNC-3° 5/8" L	NAS1352	1.25	2.3-2.8	3.75	"	[illegible]												
	25-20	Screw #8-32 UNC-3° 5/8" L	NAS1352	1.05	2.3-2.8	3.55	"	[illegible]												
26	26-1	Screw #8-32 UNC-3° 7/8" L	NAS1352	1.05	2.3-2.8															
	26-2	Screw #8-32 UNC-3° 7/8" L	NAS1352	1.00	2.3-2.8															
28	28-1	Screw #10-32 UNF-3° 5/8" L	NAS1351		2.3-2.8															
	28-2	Screw #10-32 UNF-3° 5/8" L	NAS1351		2.3-2.8															
	28-3	Screw #10-32 UNF-3° 5/8" L	NAS1351		2.3-2.8															

Questo documento contiene informazioni di proprietà di CARLO GAVAZZI SPACE SpA. Tutti i diritti sono riservati.
All information contained in this document are property of CARLO GAVAZZI SPACE SpA. All right reserved.

26.3	1.10	3.60	18/02/08	[illegible]
26.4	1.00	3.50	"	[illegible]

ITEM	Screw ID	BOLT type	PROC SPEC	Meas. Running torque [Nm] (*)	Tight. Torque [Nm]	1st Integration			2nd Integ.			3rd Integ.			4th Integ.			5th Integ.		
						Final torque [Nm]	Date	Signature	Final torque [Nm]	Date	Signature	Final torque [Nm]	Date	Signature	Final torque [Nm]	Date	Signature	Final torque [Nm]	Date	Signature
28	28-4	Screw #10-32 UNF-3° 5/8" L	NAS1351		2.3-2.8															
	28-5	Screw #10-32 UNF-3° 5/8" L	NAS1351		2.3-2.8															
	28-6	Screw #10-32 UNF-3° 5/8" L	NAS1351		2.3-2.8															
	28-7	Screw #10-32 UNF-3° 5/8" L	NAS1351		2.3-2.8															
	28-8	Screw #10-32 UNF-3° 5/8" L	NAS1351		2.3-2.8															
29	29-1	Screw #4-40 Unc-3° 5/8" L	NAS1352	N/A	0.4-0.5															
	29-2	Screw #4-40 Unc-3° 5/8" L	NAS1352	N/A	0.4-0.5															
	29-3	Screw #4-40 Unc-3° 5/8" L	NAS1352	N/A	0.4-0.5															
30	30-1	Screw #10-32 UNF-3° 5/8" L	NAS1351		2.8-3.4															
	30-2	Screw #10-32 UNF-3° 5/8" L	NAS1351		2.8-3.4															
	30-3	Screw #10-32 UNF-3° 5/8" L	NAS1351		2.8-3.4															
	30-4	Screw #10-32 UNF-3° 5/8" L	NAS1351		2.8-3.4															
	30-5	Screw #10-32 UNF-3° 5/8" L	NAS1351		2.8-3.4															
	30-6	Screw #10-32 UNF-3° 5/8" L	NAS1351		2.8-3.4															

Questo documento contiene informazioni di proprietà di CARLO GAVAZZI SPACE SpA. Tutti i diritti sono riservati.
All information contained in this document are property of CARLO GAVAZZI SPACE SpA. All right reserved.

ITEM	Screw ID	BOLT type	PROC SPEC	Meas. Running torque [Nm] (*)	Tight. Torque [Nm]	1st Integration			2nd Integ.			3rd Integ.			4th Integ.			5th Integ.		
						Final torque [Nm]	Date	Signature	Final torque [Nm]	Date	Signature	Final torque [Nm]	Date	Signature	Final torque [Nm]	Date	Signature	Final torque [Nm]	Date	Signature
30	30-7	Screw #10-32 UNF-3° 5/8" L	NAS1351		2.8-3.4															
	30-8	Screw #10-32 UNF-3° 5/8" L	NAS1351		2.8-3.4															
40	40-1	Screw # 28 UNF 1/4" L	NAS1351		7.9-8.5															
	40-2	Screw # 28 UNF 1/4" L	NAS1351		7.9-8.5															
	40-3	Screw # 28 UNF 1/4" L	NAS1351		7.9-8.5															
	40-4	Screw # 28 UNF 1/4" L	NAS1351		7.9-8.5															
	40-5	Screw # 28 UNF 1/4" L	NAS1351		7.9-8.5															
	40-6	Screw # 28 UNF 1/4" L	NAS1351		7.9-8.5															
	40-7	Screw # 28 UNF 1/4" L	NAS1351		7.9-8.5															
	40-8	Screw # 28 UNF 1/4" L	NAS1351		7.9-8.5															
	40-9	Screw # 28 UNF 1/4" L	NAS1351		7.9-8.5															
	40-10	Screw # 28 UNF 1/4" L	NAS1351		7.9-8.5															
	40-11	Screw # 28 UNF 1/4" L	NAS1351		7.9-8.5															
	40-12	Screw # 28 UNF 1/4" L	NAS1351		7.9-8.5															

Questo documento contiene informazioni di proprietà di CARLO GAVAZZI SPACE SpA. Tutti i diritti sono riservati.
All information contained in this document are property of CARLO GAVAZZI SPACE SpA. All right reserved.

ITEM	Screw ID	BOLT type	PROC SPEC	Meas. Running torque [Nm] (*)	Tight. Torque [Nm]	1st Integration			2nd Integ.			3rd Integ.			4th Integ.			5th Integ.		
						Final torque [Nm]	Date	Signature	Final torque [Nm]	Date	Signature	Final torque [Nm]	Date	Signature	Final torque [Nm]	Date	Signature	Final torque [Nm]	Date	Signature
40	40-13	Screw # 28 UNF 1/4" L	NAS1351		7.9-8.5															

(*) the (min/max) expected value are:

Screw #4-40 (0.070 / 0.338 Nm)
Screw #8-32 (0.169 / 1.000 Nm)
Screw #10-32 (0.226 / 1.469 Nm)
Screw # 28 UNF 1/4" (0.4 / 3.4 Nm)

If the measured running torque is out of the expected range, the self locking helicoil shall be removed and substitute.

Table 7-1: Screw torque log sheet

Questo documento contiene informazioni di proprietà di CARLO GAVAZZI SPACE SpA. Tutti i diritti sono riservati.
All information contained in this document are property of CARLO GAVAZZI SPACE SpA. All right reserved.

7. SCREW TORQUE LOG SHEET

ECRATE 1 FM

ITEM	Screw ID	BOLT type	PROC SPEC	Meas. Running torque [Nm] (*)	Tight. Torque [Nm]	1st Integration			2nd Integ.			3rd Integ.			4th Integ.			5th Integ.		
						Final torque [Nm] = Meas. Running torque + mean tight. Torque	Date	Signature	Final torque [Nm]	Date	Signature	Final torque [Nm]	Date	Signature	Final torque [Nm]	Date	Signature	Final torque [Nm]	Date	Signature
22	22-1	Screw #4-40 UNC-3° 1/4" L	NAS1352	0.09	0.4-0.5	0.54	13/10/08	[illegible]												
	22-2	Screw #4-40 UNC-3° 1/4" L	NAS1352	0.15	0.4-0.5	0.60	"	[illegible]												
	22-3	Screw #4-40 UNC-3° 1/4" L	NAS1352	0.12	0.4-0.5	0.57	"	[illegible]												
	22-4	Screw #4-40 UNC-3° 1/4" L	NAS1352	0.16	0.4-0.5	0.61	"	[illegible]												
	22-5	Screw #4-40 UNC-3° 1/4" L	NAS1352	0.18	0.4-0.5	0.63	"	[illegible]												
	22-6	Screw #4-40 UNC-3° 1/4" L	NAS1352	0.13	0.4-0.5	0.58	"	[illegible]												
	22-7	Screw #4-40 UNC-3° 1/4" L	NAS1352	0.13	0.4-0.5	0.58	"	[illegible]												
	22-8	Screw #4-40 UNC-3° 1/4" L	NAS1352	0.15	0.4-0.5	0.60	"	[illegible]												
	22-9	Screw #4-40 UNC-3° 1/4" L	NAS1352	0.20	0.4-0.5	0.65	"	[illegible]												
	22-10	Screw #4-40 UNC-3° 1/4" L	NAS1352	0.10	0.4-0.5	0.55	"	[illegible]												

Questo documento contiene informazioni di proprietà di CARLO GAVAZZI SPACE SpA. Tutti i diritti sono riservati.
All information contained in this document are property of CARLO GAVAZZI SPACE SpA. All right reserved.

ITEM	Screw ID	BOLT type	PROC SPEC	Meas. Running torque [Nm] (*)	Tight. Torque [Nm]	1st Integration			2nd Integ.			3rd Integ.			4th Integ.			5th Integ.		
						Final torque [Nm]	Date	Signature	Final torque [Nm]	Date	Signature	Final torque [Nm]	Date	Signature	Final torque [Nm]	Date	Signature	Final torque [Nm]	Date	Signature
22	22-11	Screw #4-40 UNC-3° 1/4" L	NAS1352	0.38	0.4-0.5	0.83	13/2/08	[illegible]												
	22-12	Screw #4-40 UNC-3° 1/4" L	NAS1352	0.23	0.4-0.5	0.67	"	[illegible]												
	22-13	Screw #4-40 UNC-3° 1/4" L	NAS1352	0.34	0.4-0.5	0.79	"	[illegible]												
	22-14	Screw #4-40 UNC-3° 1/4" L	NAS1352	0.23	0.4-0.5	0.68	"	[illegible]												
	22-15	Screw #4-40 UNC-3° 1/4" L	NAS1352	0,14	0.4-0.5	0,59	12/6/08	Pedtesch												
	22-16	Screw #4-40 UNC-3° 1/4" L	NAS1352	0,22	0.4-0.5	0,67	12/6,08	Pedtesch												
	22-17	Screw #4-40 UNC-3° 1/4" L	NAS1352	0,12	0.4-0.5	0,57	"	Pedtesch												
	22-18	Screw #4-40 UNC-3° 1/4" L	NAS1352	0,14	0.4-0.5	0,59	"	Pedtesch												
	22-19	Screw #4-40 UNC-3° 1/4" L	NAS1352	0,12	0.4-0.5	0,57	1/07/08	[illegible]												
	22-20	Screw #4-40 UNC-3° 1/4" L	NAS1352	0,13	0.4-0.5	0,58	"	[illegible]												
	22-22	Screw #4-40 UNC-3° 1/4" L	NAS1352	0,09	0.4-0.5	0,54	"	[illegible]												
	22-23	Screw #4-40 UNC-3° 1/4" L	NAS1352	0,16	0.4-0.5	0,61	"	[illegible]												
	22-24	Screw #4-40 UNC-3° 1/4" L	NAS1352	0,15	0.4-0.5	0,60	"	[illegible]												
	22-25	Screw #4-40 UNC-3° 1/4" L	NAS1352	0,23	0.4-0.5	0,68	"	[illegible]												
	22-21			0,09	0.4-0.5	0,54	"	[illegible]												

Questo documento contiene informazioni di proprietà di CARLO GAVAZZI SPACE SpA. Tutti i diritti sono riservati.
All information contained in this document are property of CARLO GAVAZZI SPACE SpA. All right reserved.

ITEM	Screw ID	BOLT type	PROC SPEC	Meas. Running torque [Nm] (*)	Tight. Torque [Nm]	1st Integration			2nd Integ.			3rd Integ.			4th Integ.			5th Integ.		
						Final torque [Nm]	Date	Signature	Final torque [Nm]	Date	Signature	Final torque [Nm]	Date	Signature	Final torque [Nm]	Date	Signature	Final torque [Nm]	Date	Signature
22	22-26	Screw #4-40 UNC-3° 1/4" L	NAS1352	0,16	0.4-0.5	0,61	"	Pachu												
	22-27	Screw #4-40 UNC-3° 1/4" L	NAS1352	0,23	0.4-0.5	0,68	"	Pachu												
	22-28	Screw #4-40 UNC-3° 1/4" L	NAS1352	0,15	0.4-0.5	0,60	"	Pachu												
	22-29	Screw #4-40 UNC-3° 1/4" L	NAS1352	0,25	0.4-0.5	0,70	"	Pachu												
	22-30	Screw #4-40 UNC-3° 1/4" L	NAS1352	0,15	0.4-0.5	0,60	"	Pachu												
	22-31	Screw #4-40 UNC-3° 1/4" L	NAS1352	0,16	0.4-0.5	0,61	"	Pachu												
	22-32	Screw #4-40 UNC-3° 1/4" L	NAS1352	0,14	0.4-0.5	0,59	"	Pachu												
	22-33	Screw #4-40 UNC-3° 1/4" L	NAS1352	0,12	0.4-0.5	0,507	"	Pachu												
	22-34	Screw #4-40 UNC-3° 1/4" L	NAS1352	0,14	0.4-0.5	0,59	"	Pachu												
	22-35	Screw #4-40 UNC-3° 1/4" L	NAS1352	0,20	0.4-0.5	0,65	"	Pachu												
	22-36	Screw #4-40 UNC-3° 1/4" L	NAS1352	0,13	0.4-0.5	0,58	"	Pachu												
23	23-1	Screw #4-40 UNC-3° 1/2" L	NAS1352	0.09	0.4-0.5	0.54	18/2/08	[illegible]												
	23-2	Screw #4-40 UNC-3° 1/2" L	NAS1352	0.09	0.4-0.5	0.54	"	[illegible]												
	23-3	Screw #4-40 UNC-3° 1/2" L	NAS1352	0.10	0.4-0.5	0.55	"	[illegible]												

Questo documento contiene informazioni di proprietà di CARLO GAVAZZI SPACE SpA. Tutti i diritti sono riservati.
All information contained in this document are property of CARLO GAVAZZI SPACE SpA. All right reserved.

ITEM	Screw ID	BOLT type	PROC SPEC	Meas. Running torque [Nm] (*)	Tight. Torque [Nm]	1st Integration			2nd Integ.			3rd Integ.			4th Integ.			5th Integ.		
						Final torque [Nm]	Date	Signature	Final torque [Nm]	Date	Signature	Final torque [Nm]	Date	Signature	Final torque [Nm]	Date	Signature	Final torque [Nm]	Date	Signature
23	23-4	Screw #4-40 UNC-3° 1/2" L	NAS1352	0.15	0.4-0.5	0.60	18/2/08	[illegible]												
	23-5	Screw #4-40 UNC-3° 1/2" L	NAS1352	0.10	0.4-0.5	0.55	"	[illegible]												
	23-6	Screw #4-40 UNC-3° 1/2" L	NAS1352	0.10	0.4-0.5	0.55	"	[illegible]												
25	25-1	Screw #8-32 UNC-3° 5/8" L	NAS1352	1.65	2.3-2.8	4.15	"	[illegible]												
	25-2	Screw #8-32 UNC-3° 5/8" L	NAS1352	1.65	2.3-2.8	4.15	"	[illegible]												
	25-3	Screw #8-32 UNC-3° 5/8" L	NAS1352	1.75	2.3-2.8	4.25	"	[illegible]												
	25-4	Screw #8-32 UNC-3° 5/8" L	NAS1352	0.65	2.3-2.8	3.15	"	[illegible]												
	25-5	Screw #8-32 UNC-3° 5/8" L	NAS1352	0.80	2.3-2.8	3.30	"	[illegible]												
	25-6	Screw #8-32 UNC-3° 5/8" L	NAS1352	1.65	2.3-2.8	3.65	"	[illegible]												
	25-7	Screw #8-32 UNC-3° 5/8" L	NAS1352	1.70	2.3-2.8	3.70	"	[illegible]												
	25-8	Screw #8-32 UNC-3° 5/8" L	NAS1352	0.70	2.3-2.8	3.2	"	[illegible]												
	25-9	Screw #8-32 UNC-3° 5/8" L	NAS1352	0.60	2.3-2.8	3.1	"	[illegible]												
	25-10	Screw #8-32 UNC-3° 5/8" L	NAS1352	0.60	2.3-2.8	3.1	"	[illegible]												
	25-11	Screw #8-32 UNC-3° 5/8" L	NAS1352	1.70	2.3-2.8	4.2	"	[illegible]												

Questo documento contiene informazioni di proprietà di CARLO GAVAZZI SPACE SpA. Tutti i diritti sono riservati.
All information contained in this document are property of CARLO GAVAZZI SPACE SpA. All right reserved.

ITEM	Screw ID	BOLT type	PROC SPEC	Meas. Running torque [Nm] (*)	Tight. Torque [Nm]	1st Integration			2nd Integ.			3rd Integ.			4th Integ.			5th Integ.		
						Final torque [Nm]	Date	Signature	Final torque [Nm]	Date	Signature	Final torque [Nm]	Date	Signature	Final torque [Nm]	Date	Signature	Final torque [Nm]	Date	Signature
25	25-12	Screw #8-32 UNC-3° 5/8" L	NAS1352	1.25	2.3-2.8	3.75	18/2/08	[illegible]												
	25-13	Screw #8-32 UNC-3° 5/8" L	NAS1352	1.05	2.3-2.8	3.55	"	[illegible]												
	25-14	Screw #8-32 UNC-3° 5/8" L	NAS1352	1.20	2.3-2.8	3.70	"	[illegible]												
	25-15	Screw #8-32 UNC-3° 5/8" L	NAS1352	1.25	2.3-2.8	3.75	"	[illegible]												
	25-16	Screw #8-32 UNC-3° 5/8" L	NAS1352	1.40	2.3-2.8	3.90	"	[illegible]												
	25-17	Screw #8-32 UNC-3° 5/8" L	NAS1352	1.45	2.3-2.8	3.95	"	[illegible]												
	25-18	Screw #8-32 UNC-3° 5/8" L	NAS1352	1.0	2.3-2.8	3.50	"	[illegible]												
	25-19	Screw #8-32 UNC-3° 5/8" L	NAS1352	0.85	2.3-2.8	3.35	"	[illegible]												
	25-20	Screw #8-32 UNC-3° 5/8" L	NAS1352	1.1	2.3-2.8	3.60	"	[illegible]												
26	26-1	Screw #8-32 UNC-3° 7/8" L	NAS1352	1.15	2.3-2.8	3.65	18/02/08	[illegible]												
	26-2	Screw #8-32 UNC-3° 7/8" L	NAS1352	1.05	2.3-2.8	3.55	"	[illegible]												
28	28-1	Screw #10-32 UNF-3° 5/8" L	NAS1351	~~2.3-2.8~~																
	28-2	Screw #10-32 UNF-3° 5/8" L	NAS1351	~~2.3-2.8~~																
	28-3	Screw #10-32 UNF-3° 5/8" L	NAS1351	~~2.3-2.8~~																

Questo documento contiene informazioni di proprietà di CARLO GAVAZZI SPACE SpA. Tutti i diritti sono riservati.
All information contained in this document are property of CARLO GAVAZZI SPACE SpA. All right reserved.

ITEM	Screw ID	BOLT type	PROC SPEC	Meas. Running torque [Nm] (*)	Tight. Torque [Nm]	1st Integration			2nd Integ.			3rd Integ.			4th Integ.			5th Integ.		
						Final torque [Nm]	Date	Signature	Final torque [Nm]	Date	Signature	Final torque [Nm]	Date	Signature	Final torque [Nm]	Date	Signature	Final torque [Nm]	Date	Signature
28	28-4	Screw #10-32 UNF-3° 5/8" L	NAS1351	~~2.3-2.8~~																
	28-5	Screw #10-32 UNF-3° 5/8" L	NAS1351	~~2.3-2.8~~																
	28-6	Screw #10-32 UNF-3° 5/8" L	NAS1351	~~2.3-2.8~~																
	28-7	Screw #10-32 UNF-3° 5/8" L	NAS1351	~~2.3-2.8~~																
	28-8	Screw #10-32 UNF-3° 5/8" L	NAS1351	~~2.3-2.8~~																
29	29-1	Screw #4-40 Unc-3° 5/8" L	NAS1352	N/A	0.4-0.5															
	29-2	Screw #4-40 Unc-3° 5/8" L	NAS1352	N/A	0.4-0.5															
	29-3	Screw #4-40 Unc-3° 5/8" L	NAS1352	N/A	0.4-0.5															
30	30-1	Screw #10-32 UNF-3° 5/8" L	NAS1351	0.7	2.8-3.4	3.5	12.02.08	[illegible]												
	30-2	Screw #10-32 UNF-3° 5/8" L	NAS1351	0.9	2.8-3.4	3.7	"	[illegible]												
	30-3	Screw #10-32 UNF-3° 5/8" L	NAS1351	1.0	2.8-3.4	3.8	"	[illegible]												
	30-4	Screw #10-32 UNF-3° 5/8" L	NAS1351	0.9	2.8-3.4	3.7	"	[illegible]												
	30-5	Screw #10-32 UNF-3° 5/8" L	NAS1351	1.2	2.8-3.4	4.0	"	[illegible]												
	30-6	Screw #10-32 UNF-3° 5/8" L	NAS1351	1.2	2.8-3.4	4.0	"	[illegible]												

Questo documento contiene informazioni di proprietà di CARLO GAVAZZI SPACE SpA. Tutti i diritti sono riservati.
All information contained in this document are property of CARLO GAVAZZI SPACE SpA. All right reserved.

ITEM	Screw ID	BOLT type	PROC SPEC	Meas. Running torque [Nm] (*)	Tight. Torque [Nm]	1st Integration			2nd Integ.			3rd Integ.			4th Integ.			5th Integ.		
						Final torque [Nm]	Date	Signature	Final torque [Nm]	Date	Signature	Final torque [Nm]	Date	Signature	Final torque [Nm]	Date	Signature	Final torque [Nm]	Date	Signature
30	30-7	Screw #10-32 UNF-3° 5/8" L	NAS1351	1.7	2.8-3.4	4.5	12.03.08	[illegible]												
	30-8	Screw #10-32 UNF-3° 5/8" L	NAS1351	1.5	2.8-3.4	4.3	"	[illegible]												
40	40-1	Screw # 28 UNF 1/4" L	NAS1351		7.9-8.5															
	40-2	Screw # 28 UNF 1/4" L	NAS1351		7.9-8.5															
	40-3	Screw # 28 UNF 1/4" L	NAS1351		7.9-8.5															
	40-4	Screw # 28 UNF 1/4" L	NAS1351		7.9-8.5															
	40-5	Screw # 28 UNF 1/4" L	NAS1351		7.9-8.5															
	40-6	Screw # 28 UNF 1/4" L	NAS1351		7.9-8.5															
	40-7	Screw # 28 UNF 1/4" L	NAS1351		7.9-8.5															
	40-8	Screw # 28 UNF 1/4" L	NAS1351		7.9-8.5															
	40-9	Screw # 28 UNF 1/4" L	NAS1351		7.9-8.5															
	40-10	Screw # 28 UNF 1/4" L	NAS1351		7.9-8.5															
	40-11	Screw # 28 UNF 1/4" L	NAS1351		7.9-8.5															
	40-12	Screw # 28 UNF 1/4" L	NAS1351		7.9-8.5															

Questo documento contiene informazioni di proprietà di CARLO GAVAZZI SPACE SpA. Tutti i diritti sono riservati.
All information contained in this document are property of CARLO GAVAZZI SPACE SpA. All right reserved.

ITEM	Screw ID	BOLT type	PROC SPEC	Meas. Running torque [Nm] (*)	Tight. Torque [Nm]	1st Integration			2nd Integ.			3rd Integ.			4th Integ.			5th Integ.		
						Final torque [Nm]	Date	Signature	Final torque [Nm]	Date	Signature	Final torque [Nm]	Date	Signature	Final torque [Nm]	Date	Signature	Final torque [Nm]	Date	Signature
40	40-13	Screw # 28 UNF 1/4" L	NAS1351		7.9-8.5															

(*) the (min/max) expected value are:

Screw #4-40 (0.070 / 0.338 Nm)
Screw #8-32 (0.169 / 1.000 Nm)
Screw #10-32 (0.226 / 1.469 Nm)
Screw # 28 UNF 1/4" (0.4 / 3.4 Nm)

If the measured running torque is out of the expected range, the self locking helicoil shall be removed and substitute.

Table 7-1: Screw torque log sheet

Questo documento contiene informazioni di proprietà di CARLO GAVAZZI SPACE SpA. Tutti i diritti sono riservati.
All information contained in this document are property of CARLO GAVAZZI SPACE SpA. All right reserved.