CARLO GAVAZZI SPACE SpA

RICH SYSTEM

Tipo Doc.: *Doc.Type:*	TECHNICAL NOTE			N° DRD: *DRD N°:*	NA
N° Doc.: *Doc. N°:*	**RICSYS-TN-CGS-002**	Ediz.: *Issue:* **1**	Data: *Date:* **03/10/2005**	Pagina *Page* **1**	Di *Of* **10**
Titolo : *Title :*	LOWER TOF HEATERS AND THERMOSTATS INTEGRATION DESCRIPTION				

	Nome & Funzione *Name & Function*	Firma *Signature*	Data *Date*
Preparato da: *Prepared by:*	Sardo G. (DT/MT/)		
Approvato da: *Approved by:*	Cinquepalmi C. (PC/CC) Cremonesi. (PA/SF)		
Applicazione autorizzata da: *Application authorized by:*	Sardo G. (DT/MT/)		
Customer / Higher Level Contractor			
Accettato da: *Accepted by:*			
Approvato da: *Approved by:*			

LISTA DI DISTRIBUZIONE *DISTRIBUTION LIST*	N	A	I
Interna / *Internal*			
Esterna / *External*			
ASI	1	x	
INFN BO	1		x

N=Numero di copie A=Applicazione I=Informazione
N=Number of copy A=Application I=Information

Gestione documenti:
Data Management: ----------
Firma / *Signature* Data / *Date*

File: RICSYS-TN-CGS-002_iss1.doc

Questo documento contiene informazioni di proprietà di CARLO GAVAZZI SPACE SpA: Tutti i diritti sono riservati
All information contained in this document are property of CARLO GAVAZZI SPACE SpA. All right reserved.

REGISTRAZIONE DELLE MODIFICHE / *CHANGE RECORD*

EDIZIONE *ISSUE*	DATA *DATE*	AUTORIZZAZIONE *CHANGE AUTHORITY*	OGGETTO DELLA MODIFICA E SEZIONI AFFETTE *REASON FOR CHANGE AND AFFECTED SECTIONS*
1	03/10/2005		First issue

Questo documento contiene informazioni di proprietà di CARLO GAVAZZI SPACE SpA. Tutti i diritti sono riservati.
All information contained in this document are property of CARLO GAVAZZI SPACE SpA. All right reserved.

LISTA DELLE PAGINE VALIDE / *LIST OF VALID PAGES*

PAGINA *PAGE*	EDIZIONE *ISSUE*	PAGINA *PAGE*	EDIZIONE *ISSUE*	PAGINA *PAGE*	EDIZIONE *ISSUE*	PAGINA *PAGE*	EDIZIONE *ISSUE*	PAGINA *PAGE*	EDIZIONE *ISSUE*
1 - 10	1								

Questo documento contiene informazioni di proprietà di CARLO GAVAZZI SPACE SpA. Tutti i diritti sono riservati.
All information contained in this document are property of CARLO GAVAZZI SPACE SpA. All right reserved.

TABLE OF CONTENT

1. ACRONYMS 5

2. APPLICABLE DOCUMENT 5

3. REFERENCE DOCUMENT 5

4. SCOPE 6

5. HEATERS INTEGRATION 7

5.1 INTEGRATION POSITION 7
5.2 GLUING SEQUENCE 8

6. THERMOSTATS INTEGRATION 9

6.1 INTEGRATION POSITION 9
6.2 GLUING SEQUENCE 9

LIST OF FIGURES

Figure 4-1: LOWER TOF heaters and thermostats schematics 6
Figure 5-1: plane +/- X heater location 7
Figure 5-2: plane +/- Y heater location 7
Figure 5-3: heaters gluing example 8
Figure 6-1: plane +/- X thermostats location 9
Figure 6-2: plane +/-Y thermostats location 9
Figure 6-3: thermostats gluing example 10

Questo documento contiene informazioni di proprietà di CARLO GAVAZZI SPACE SpA. Tutti i diritti sono riservati.
All information contained in this document are property of CARLO GAVAZZI SPACE SpA. All right reserved.

1. ACRONYMS

AMS: Alpha Magnetic Spectrometer

ISS : International Space Station

PMT: Photo Multiplier Tube

RICH : Ring Imaging Cherenkov Counter

EM : Engineering Model

FM : Flight Model

PA : PRODUCT ASSURANCE

PDS: Power Distribution System

PI : Principal Investigator

TOF: Time Of Flight

USS: Unique Support Structure

2. APPLICABLE DOCUMENT

AD	Doc. Number	Issue	Date	Title/Applicability
1	AMS02-TN-CGS-007	1	08/03/2004	AMS-02 120VDC AND 28 VDC HEATER DESCRIPTION
2	AMS02-TN-CGS-004	5	02/03/2005	PRELIMINARY THERMAL REQUIREMENTS FOR AMS02 INTERNAL INTERFACES
3	RICSYS-RP-CGS-008	1	03/09/2003	TOF Thermal control system design report

3. REFERENCE DOCUMENT

RD	Doc. Number	Issue	Date	Title/Applicability

Questo documento contiene informazioni di proprietà di CARLO GAVAZZI SPACE SpA. Tutti i diritti sono riservati.
All information contained in this document are property of CARLO GAVAZZI SPACE SpA. All right reserved.

4. SCOPE

The LOWER TOF is equipped with 8 Kapton foil heaters (1 each +/- X plane and 3 each +/- Y plane) glued inside the carbon fiber boxes close to the PMTs.
The LOWER TOF heaters are double-face type and two layers of each heaters are supplied by line A and line B of the PDS respectively.
Heaters operations are controlled by means of PDS switch and of thermostats for each of the two PDS bus.
One thermostat is foreseen for each side (+/-X and +/- Y) of the LOWER TOF for both line A and line B.
Detailed heaters schematics (showing bus arrangements for +/- X and +/- Y planes) is provided below.

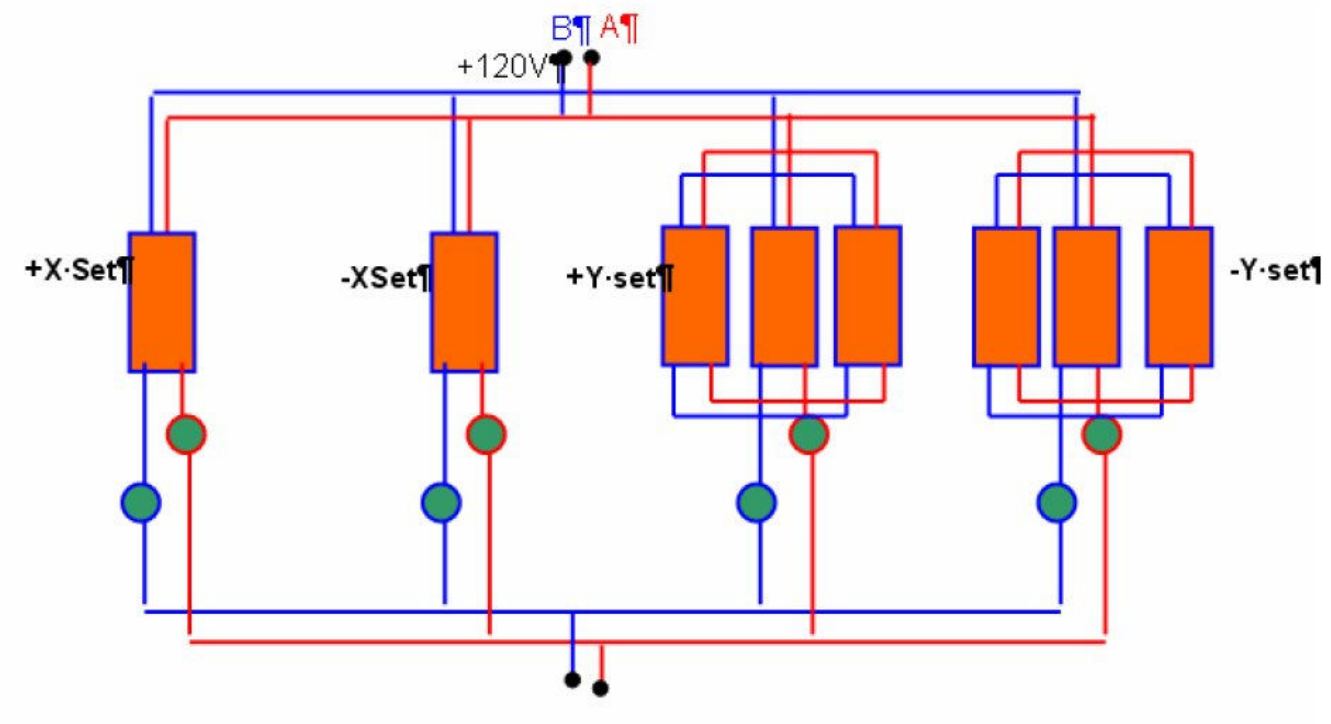

Figure 4-1: LOWER TOF heaters and thermostats schematics

The scope of this document is to describe the optimal procedure to be followed for heaters and thermostats integration.
The steps of the integrations are written in **bold** and have a number for clarity.

Questo documento contiene informazioni di proprietà di CARLO GAVAZZI SPACE SpA. Tutti i diritti sono riservati.
All information contained in this document are property of CARLO GAVAZZI SPACE SpA. All right reserved.

5. HEATERS INTEGRATION

5.1 INTEGRATION POSITION

01 Identify the location foreseen for the heaters.
For the two planes X and Y, the correct position sketched in the following images:

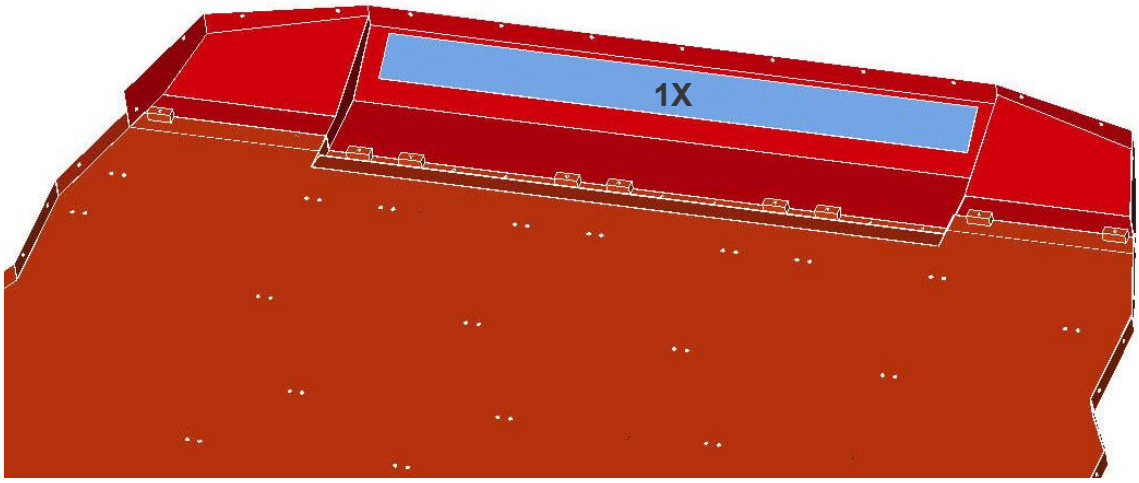

Figure 5-1: plane +/- X heater location

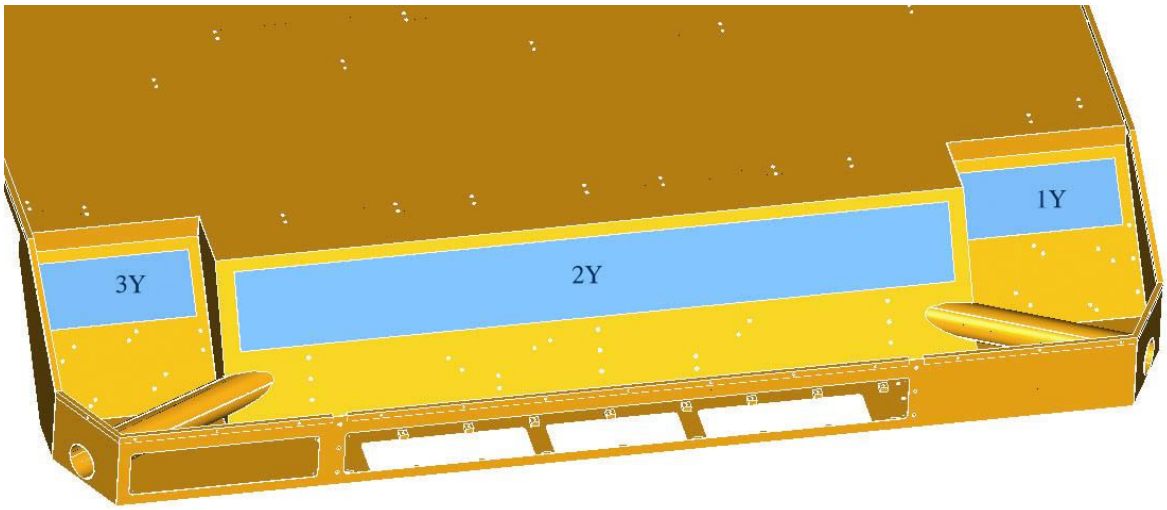

Figure 5-2: plane +/- Y heater location

Questo documento contiene informazioni di proprietà di CARLO GAVAZZI SPACE SpA. Tutti i diritti sono riservati.
All information contained in this document are property of CARLO GAVAZZI SPACE SpA. All right reserved.

The heaters identification numbers are listed in the following table 1:

Item	Rica	**Ohm +/-2%**	No Of layer	Sizes (mm*mm)	No. Pieces (total)
1Y and 3Y	R0609	4500+4500	2	190*80	4
2Y	R0610	3405+3405	2	580*95	2
1X	R0611	1703+1703	2	580*50	2

Table 1: LOWER TOF heaters identification number

5.2 GLUING SEQUENCE

02 Clean the areas dedicated to heaters with isopropyl alcohol and wait for complete evaporation.
Always use gloves (no latex, but cotton gloves)

03 Make a dry test, positioning the heaters in the foreseen position, marking with a pen the corners and some reference points to help during the gluing phase

04 Remove the protection paper from the heaters and bond it on the structure surface with care.
During this operation, avoid trapping air bubbles.
Start from one of the short edge, gluing from that edge towards the opposite one

05 Fix the corners of the heaters, the cables area and the 4 edges (one drop every 3-5 cm) with drops of EC 2216 A/B adhesive (see following example image).

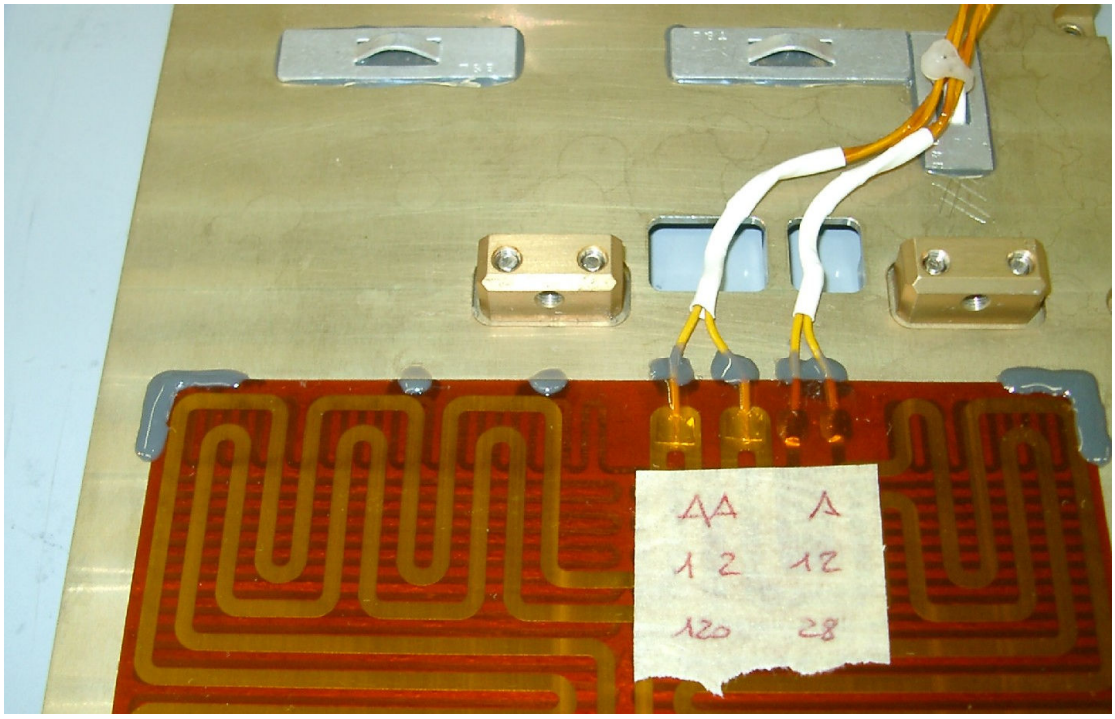

Figure 5-3: heaters gluing example

06 Wait for curing time according to supplier data sheet

Questo documento contiene informazioni di proprietà di CARLO GAVAZZI SPACE SpA. Tutti i diritti sono riservati.
All information contained in this document are property of CARLO GAVAZZI SPACE SpA. All right reserved.

6. THERMOSTATS INTEGRATION

6.1 INTEGRATION POSITION

01 Identify the location foreseen for the thermostats
For the two planes X and Y, the correct position sketched in the following images:

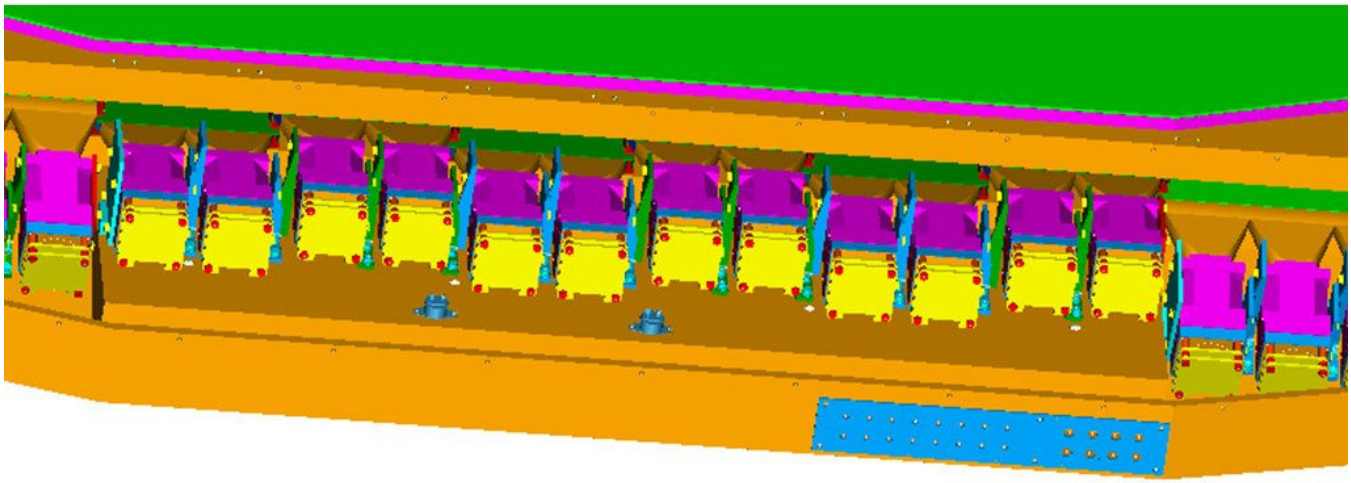

Figure 6-1: plane +/- X thermostats location

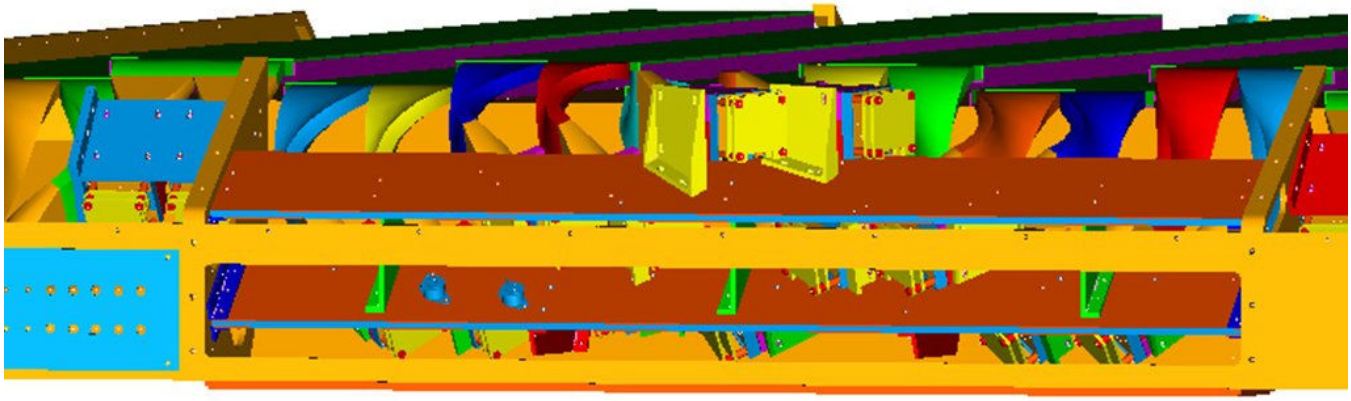

Figure 6-2: plane +/-Y thermostats location

6.2 GLUING SEQUENCE

02 Clean the areas dedicated to thermostats with isopropyl alcohol and wait for complete evaporation.
Always use gloves

03 Mask the areas dedicated to the thermostats using a Kapton tape

Questo documento contiene informazioni di proprietà di CARLO GAVAZZI SPACE SpA: Tutti i diritti sono riservati
All information contained in this document are property of CARLO GAVAZZI SPACE SpA. All right reserved.

04 Grind the aforementioned area with sand paper 600 or a proper tool; clean after grinding with isopropyl alcohol and wait for complete evaporation.

05 Grind the thermostat area dedicated to the gluing with sand paper 600; clean after grinding with isopropyl alcohol and wait for complete evaporation.

06 Put a proper quantity of ECCOBOND 285 on both thermostats and area where it has to be glued.

07 Apply an extra quantity of glue all around the thermostat in order to make a meniscus between the thermostat and the gluing surface (see following example image).

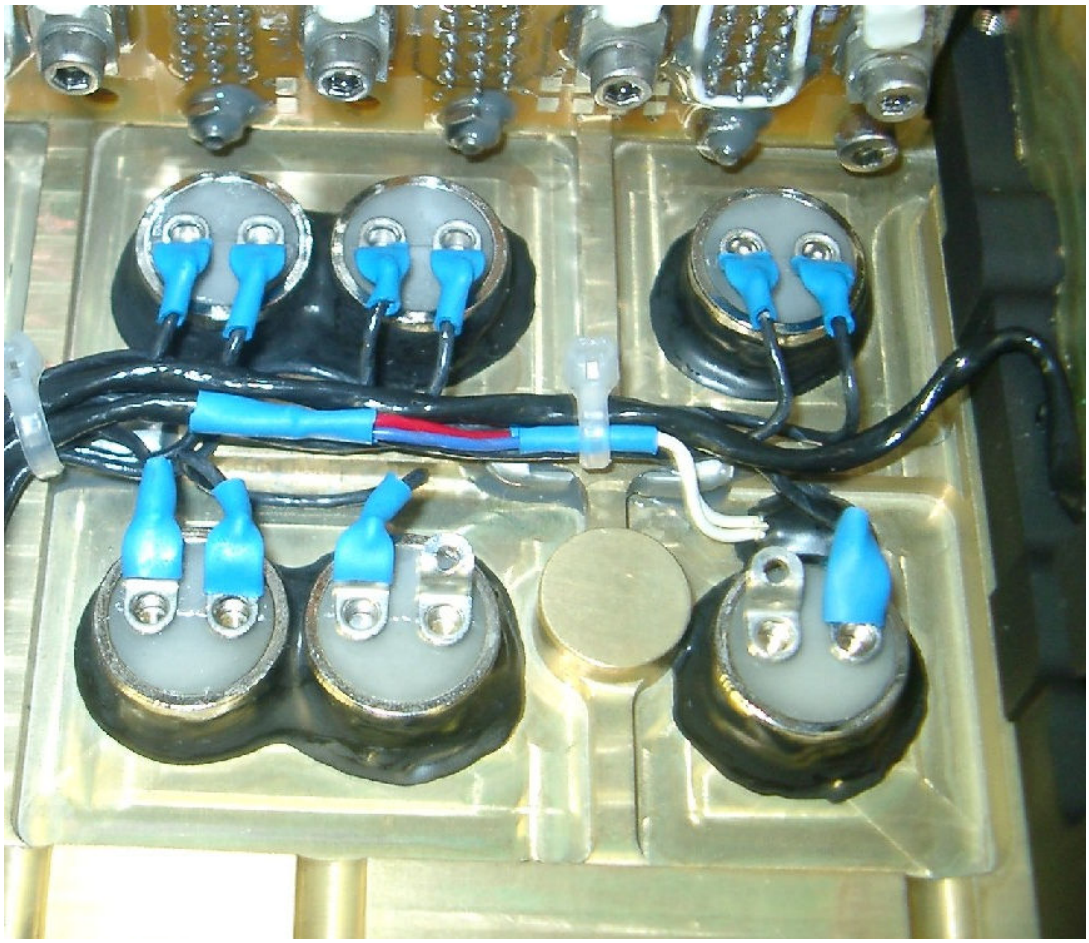

Figure 6-3: thermostats gluing example

07 Wait for curing time according to supplier data sheet

Questo documento contiene informazioni di proprietà di CARLO GAVAZZI SPACE SpA. Tutti i diritti sono riservati.
All information contained in this document are property of CARLO GAVAZZI SPACE SpA. All right reserved.