CARLO GAVAZZI SPACE SpA

RICH System

Tipo Doc.: *Doc.Type:* INTERFACE CONTROL DOCUMENT			N° DRD: *DRD N°:* NA
N° Doc.: *Doc. N°:* **RICSYS-IC-CGS-002**	Ediz.: *Issue:* **1**	Data: *Date:* **4/05/2007**	Pagina *Page* **1** Di *Of* **15**
Titolo : *Title :* TOF THERMAL CONTROL SYSTEM INTERFACE CONTROL DOCUMENT			

	Nome & Funzione *Name & Function*	Firma *Signature*	Data *Date*
Preparato da: *Prepared by:*	Franzoso A. (DT/MT)		4/5/2007
Approvato da: *Approved by:*	Cinquepalmi C. (PA/CC)	C. Cinquepalmi	17.05.07
	Cremonesi L. (PA/QA)	L. Cremonesi	17.05.07
	X Molina M. (DT/MT)		04/05/07
Applicazione autorizzata da: *Application authorized by:*	Olivier M. (DT/MT)		04/05/07

Customer / Higher Level Contractor

Accettato da: *Accepted by:*			
Approvato da: *Approved by:*			

LISTA DI DISTRIBUZIONE *DISTRIBUTION LIST*	N	A	I
Interna / *Internal*			
Vettore, C. (DT\MT)	1		x
Esterna / *External*			
Laurenti, G. (INFN BO)	1	X	
Russo E. (ASI)	1		X

N=Numero di copie A=Applicazione I=Informazione
N=Number of copy A=Application I=Information

Gestione documenti: *Data Management:* Firma / *Signature* Data / *Date* 17/05/07

File: RICSYS-IC-CGS-002_iss1.doc

Questo documento contiene informazioni di proprietà di CARLO GAVAZZI SPACE SpA: Tutti i diritti sono riservati
All information contained in this document are property of CARLO GAVAZZI SPACE SpA. All right reserved.

REGISTRAZIONE DELLE MODIFICHE / *CHANGE RECORD*

EDIZIONE *ISSUE*	DATA *DATE*	AUTORIZZAZIONE *CHANGE AUTHORITY*	OGGETTO DELLA MODIFICA E SEZIONI AFFETTE *REASON FOR CHANGE AND AFFECTED SECTIONS*
1	4/05/2007		First Issue

Questo documento contiene informazioni di proprietà di CARLO GAVAZZI SPACE SpA. Tutti i diritti sono riservati
All information contained in this document are property of CARLO GAVAZZI SPACE SpA. All right reserved.

LISTA DELLE PAGINE VALIDE / *LIST OF VALID PAGES*

PAGINA *PAGE*	EDIZIONE *ISSUE*	PAGINA *PAGE*	EDIZIONE *ISSUE*	PAGINA *PAGE*	EDIZIONE *ISSUE*	PAGINA *PAGE*	EDIZIONE *ISSUE*	PAGINA *PAGE*	EDIZIONE *ISSUE*
1 - 15	1								

Questo documento contiene informazioni di proprietà di CARLO GAVAZZI SPACE SpA Tutti i diritti sono riservati.
All information contained in this document are property of CARLO GAVAZZI SPACE SpA. All right reserved.

TABLE OF CONTENT

1. SCOPE 5

2. DOCUMENTS 5

2.1 APPLICABLE DOCUMENTS 5
2.2 REFERENCE DOCUMENTS 5

3. ACRONYMS 5

4. HARDWARE DESCRIPTION 6

4.1 LOWER TOF HARDWARE GENERAL OVERVIEW 6
4.2 TOF TCS HARDWARE IDENTIFICATION AND DESCRIPTION 9
4.3 TOF HEATERS MECHANICAL INTERFACE 10
4.4 TOF THERMOSTATS MECHANICAL INTERFACE 14
4.5 TOF HEATERS AND THERMOSTATS ELECTRICAL INTERFACE 15

LIST OF FIGURES

Fig. 4 1: Lower TOF Exploded view 6
Fig. 4 2: Lower TOF 4-X plane. Scintillating bars are wrapped with reflective coatings 7
Fig. 4.3: Lower TOF 3-Y plane, mounted on top of the 4-X plane Light guides and PMT are visible at the outer extremities of the bars. Upper cover of the 3-Y plane is missing in the figure 7
Fig. 4.4: Lower TOF assembly prior to thermal vacuum test, with the box completely integrated. Support structures are missing 8
Fig. 4 5: Lower TOF TCS assembly general overview. All items are symmetrical with respect to the center of the detector 9
Fig. 4.6: Lower TOF heater drawings, Type A and B (upper and lower, respectively). Each heater is a double layer heater, with 2 equivalent separated circuits. NOTE: Drawings not to scale! 10
Fig. 4.7: Lower TOF heater drawings, Type C. Each heater is a double layer heater, with 2 equivalent separated circuits. NOTE: Drawing not to scale! 11
Fig. 4.8: Lower TOF Heater Type A and B (mounted on the 3-Y plane box, below the PMT and light guides). Only one side of the plane is shown, the other side is symmetrical (hosting the other 3 heaters) 11
Fig 4.9: Lower TOF Heater Type B (mounted on central sides of 3-Y plane). The heater is glued on the box on the lower side, below PMTs. On the right, the heater is visible below the PMT light guides after the PMT integration 12
Fig 4.10: Lower TOF Heater Type A (mounted on both sides of 3-Y plane). The heaters are glued on the box on the lower side, below PMTs. On the right, the heater is visible below the PMT light guides after the PMT integration 12
Fig 4.11: Lower TOF Heater Type C (mounted on the 4-X plane box upper carter, above the PMT and light guides). Only one side of the plane is shown, the other side is symmetrical (hosting an identical heater) 13
Fig. 4.12: Lower TOF Heater Type C (mounted on both sides of 4-X plane) The heater is glued on the upper carters of the box (in the figure, in "open" configuration) 13
Fig. 4.13: Lower TOF thermostats location (red circles), on the 4-X plane; at right, the location is indicated by the arrows The other couple of 4-X plane thermostats is mounted in a symmetrical location on the other plane side 14
Fig. 4 14: TOF heaters and thermostats electrical scheme 15
Fig. 4 15: Heater wires 15

Questo documento contiene informazioni di proprietà di CARLO GAVAZZI SPACE SpA. Tutti i diritti sono riservati
All information contained in this document are property of CARLO GAVAZZI SPACE SpA. All right reserved.

1. SCOPE

This document describes the TOF thermal control hardware assembly interfaces, providing information on the location of the hardware provided by CGS onto the detector.

2. DOCUMENTS

2.1 APPLICABLE DOCUMENTS

AD	Document Number	Issue/Date	Rev.	Title/Applicability
1	AMS02-TN-004-CGS	5	02/03/2005	n/a
2	I/020/03/0	n/a	14/05/2003	n/a

2.2 REFERENCE DOCUMENTS

RD	Document Number	Issue/Date	Rev.	Title/Applicability
1	AMS02-TN-CGS-007	Issue 2, 30/11/2005		AMS 120VDC and 28VDC HEATERS DESCRIPTION

3. ACRONYMS

AD	Applicable Document
AMS-02	Alpha Magnetic Spectrometer 02
EIB	Electronic Board
PMT	Photomultiplier Tube
RD	Reference Document
TCS	Thermal Control System
TOF	Time Of Flight

Questo documento contiene informazioni di proprietà di CARLO GAVAZZI SPACE SpA. Tutti i diritti sono riservati.
All information contained in this document are property of CARLO GAVAZZI SPACE SpA. All right reserved.

4. HARDWARE DESCRIPTION

4.1 LOWER TOF HARDWARE GENERAL OVERVIEW

The TOF detector is built by INFN Bologna

Its core is composed of scintillating plastic bars, placed in 2 orthogonal directions.

At the ends, the bars are equipped with light guides and photomultiplier tubes (PMT)

The Lower TOF bars are arranged in 2 layers (or planes), one along the AMS-system X direction and the second along the Y direction Each layer of bars, and the respective PMTs, are enclosed into a carbon fiber box Since 2 layers are present also on the Upper TOF, the Lower TOF planes are referred as 3-Y and 4-X planes

Carbon fiber boxes are aluminized on the external side for thermal reasons (this thermal provision is under the responsibility of INFN Bologna and belongs to the mechanical design, therefore is outside the CGS TCS control)

The two carbon fiber boxes are sustained and connected to the AMS-02 support structure by a system of 16 struts, and a mechanical frame

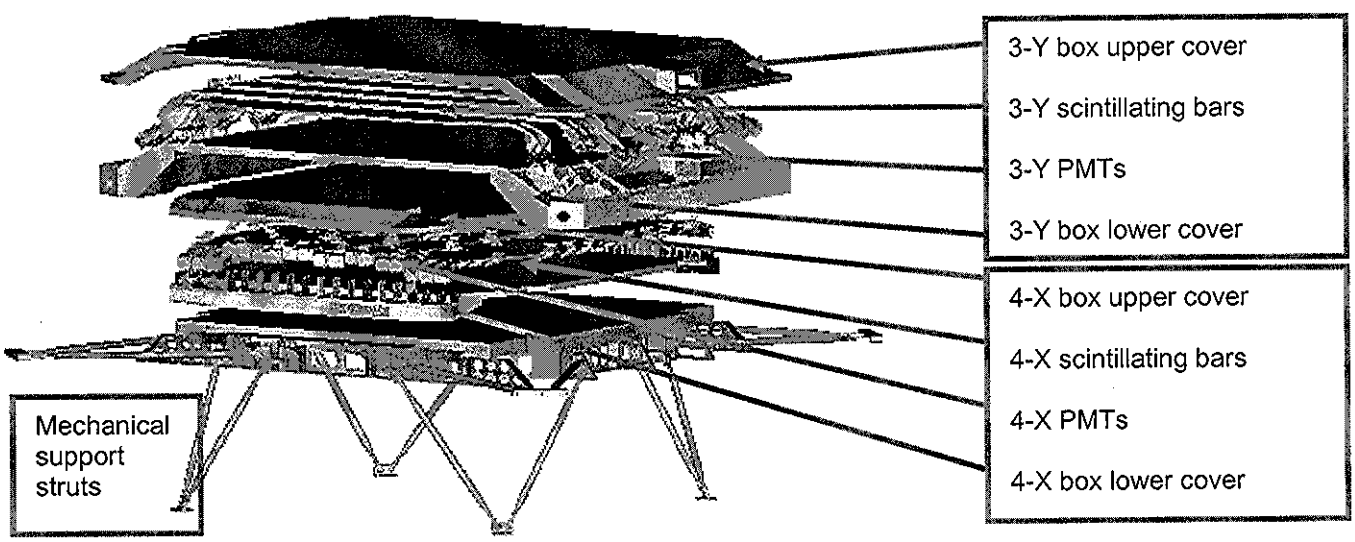

Fig. 4.1: Lower TOF Exploded view

Questo documento contiene informazioni di proprietà di CARLO GAVAZZI SPACE SpA. Tutti i diritti sono riservati
All information contained in this document are property of CARLO GAVAZZI SPACE SpA. All right reserved.

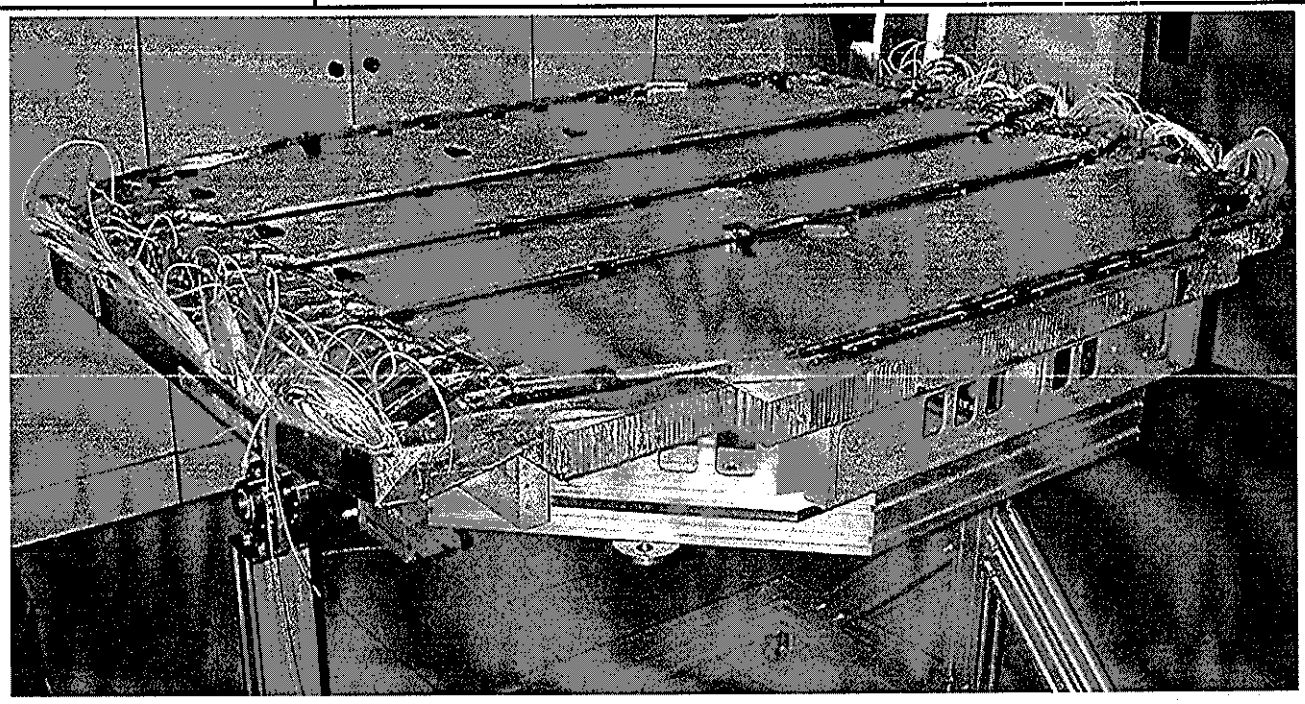

Fig. 4.2: Lower TOF 4-X plane. Scintillating bars are wrapped with reflective coatings.

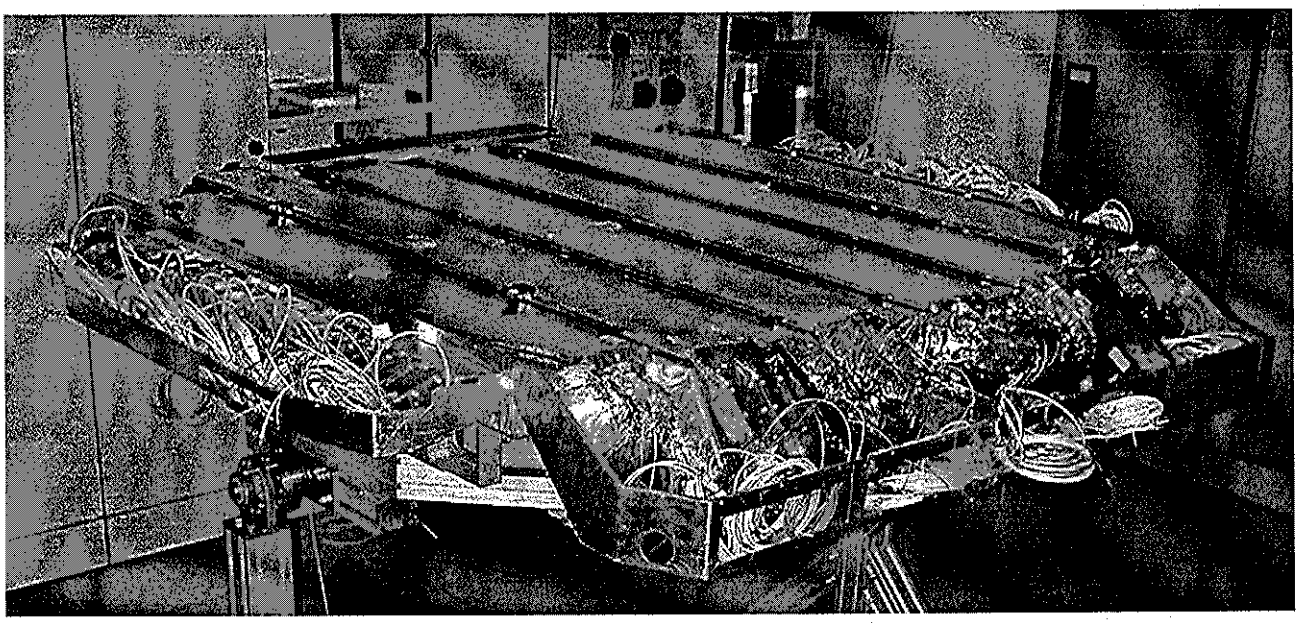

Fig. 4.3: Lower TOF 3-Y plane, mounted on top of the 4-X plane. Light guides and PMT are visible at the outer extremities of the bars. Upper cover of the 3-Y plane is missing in the figure.

Questo documento contiene informazioni di proprietà di CARLO GAVAZZI SPACE SpA. Tutti i diritti sono riservati.
All information contained in this document are property of CARLO GAVAZZI SPACE SpA. All right reserved.

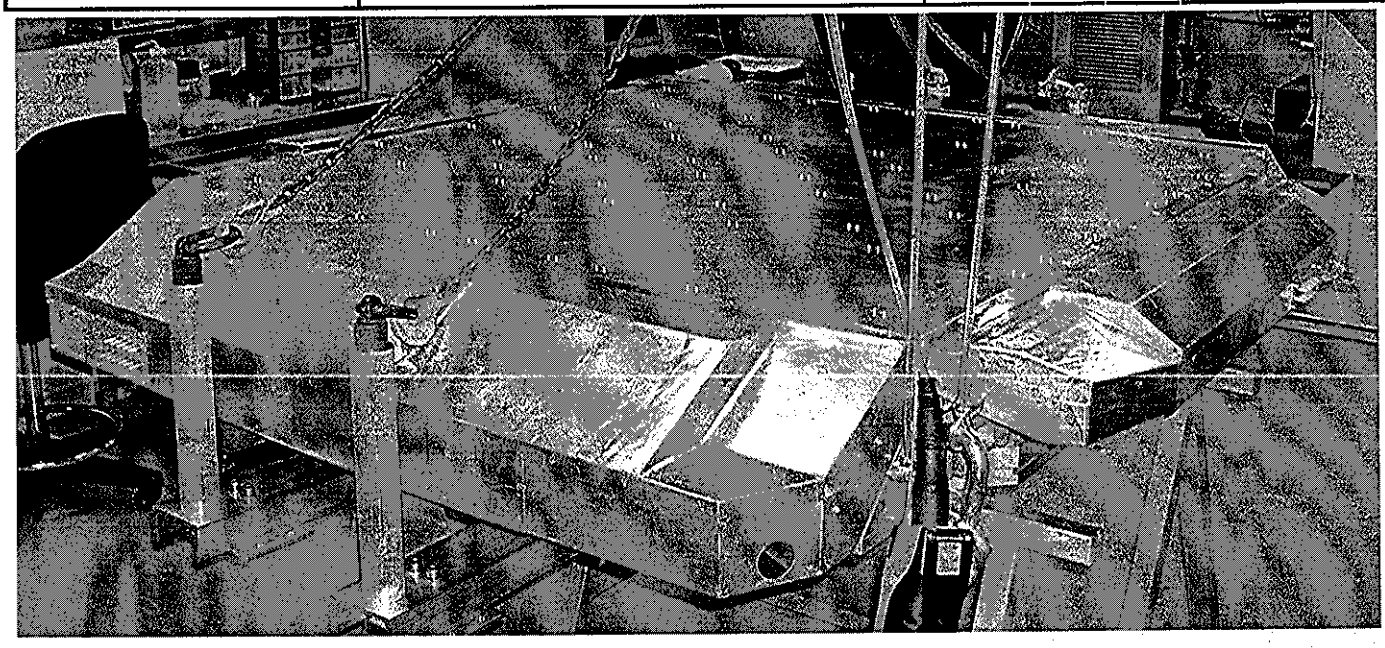

Fig. 4.4: Lower TOF assembly prior to thermal vacuum test, with the box completely integrated. Support structures are missing.

Questo documento contiene informazioni di proprietà di CARLO GAVAZZI SPACE SpA. Tutti i diritti sono riservati
All information contained in this document are property of CARLO GAVAZZI SPACE SpA. All right reserved.

4.2 TOF TCS HARDWARE IDENTIFICATION AND DESCRIPTION

The thermal control system (TCS) hardware is composed of.

1. 10 heater patches, mounted on the Lower TOF mechanics.
2. 8 thermostats, mounted on the Lower TOF mechanical structure, 2 per side.
3. MLI, which is surrounding both Lower TOF and RICH structures.

Each element location and shape is shown in the next figure, and described following sections.

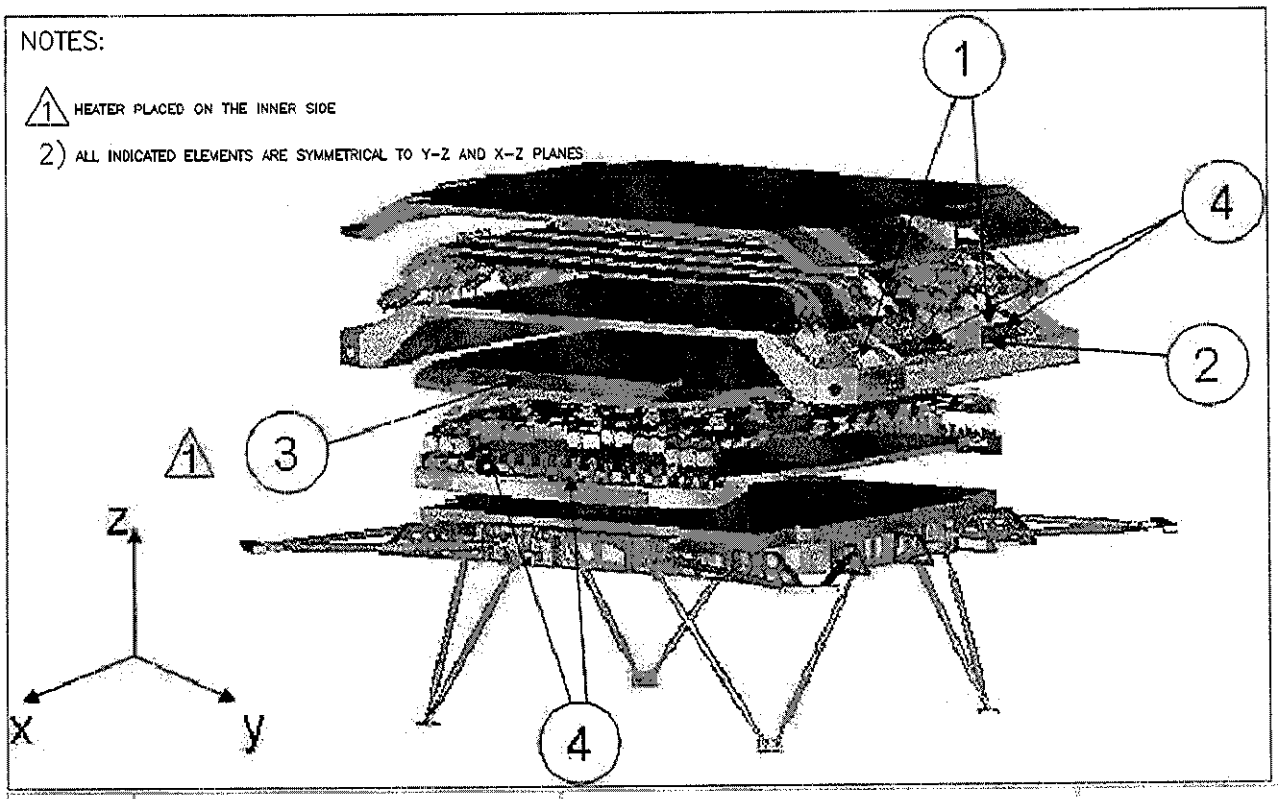

ITEM	DESCRIPTION	P/N-ID.CODE	QTY
4	THERMOSTAT	370200101CMLM04(2)10(2)70K1	8
3	HEATER C	R0611	2
2	HEATER B	R0610	2
1	HEATER A	R0609	4

Fig 4.5: Lower TOF TCS assembly general overview. All items are symmetrical with respect to the center of the detector.

Questo documento contiene informazioni di proprietà di CARLO GAVAZZI SPACE SpA Tutti i diritti sono riservati
All information contained in this document are property of CARLO GAVAZZI SPACE SpA. All right reserved.

4.3 TOF HEATERS MECHANICAL INTERFACE

Lower TOF heaters are a part of the TCS hardware provided by CGS.

Lower TOF Heaters are 10 in total, and are divided into 3 families:

- Heaters type A, P/N R0609, nominal resistance 6810 Ohm, to be mounted on the 3-Y plane,
- Heaters type B, P/N R0610, nominal resistance 3405 Ohm, to be mounted on the 3-Y plane,
- Heaters type C, P/N R0611, nominal resistance 1703 Ohm, to be mounted on the 4-X plane.

Heaters dimensions are given in the following figures:

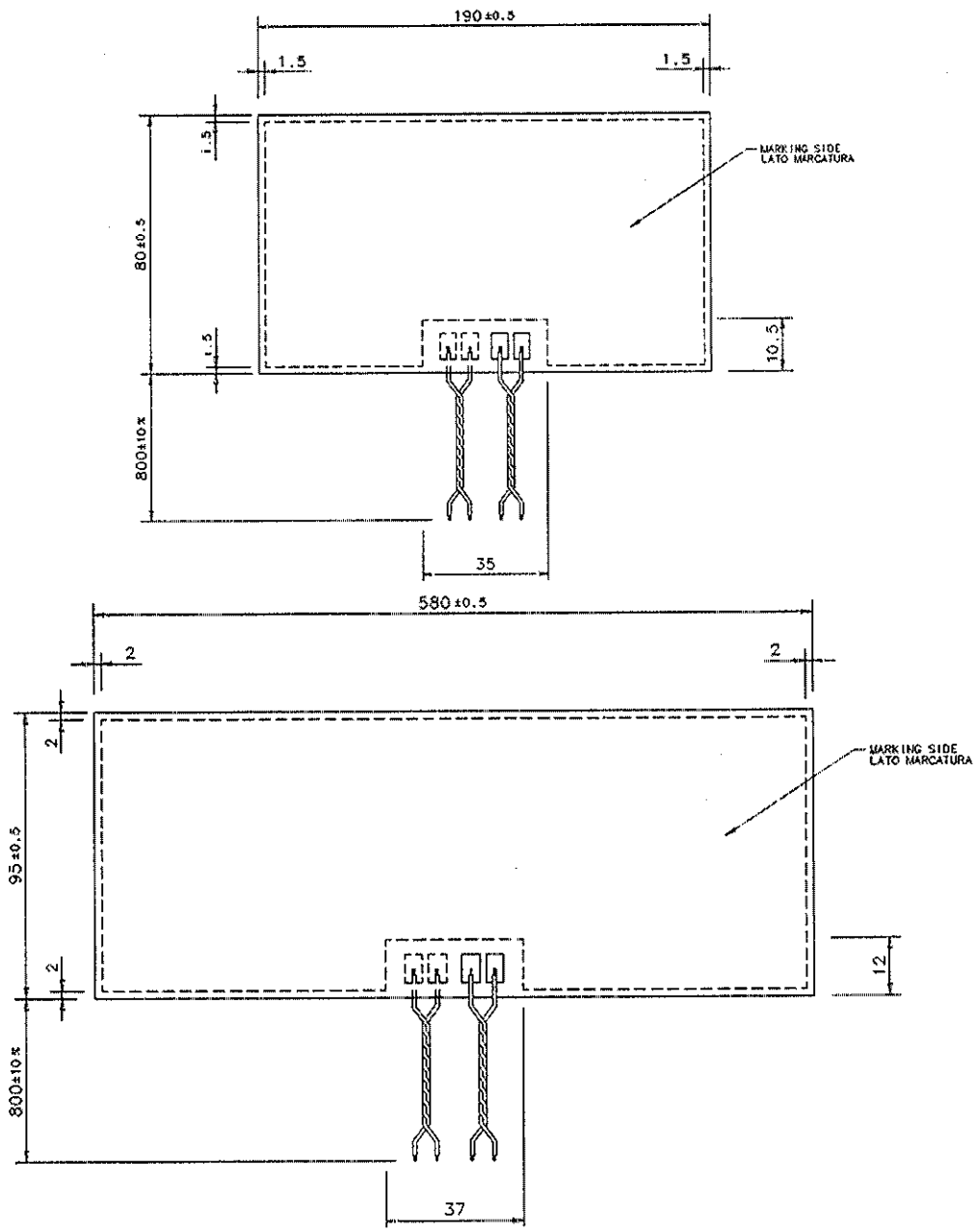

Fig. 4.6: Lower TOF heater drawings, Type A and B (upper and lower, respectively). Each heater is a double layer heater, with 2 equivalent separated circuits. NOTE: Drawings not to scale!

Questo documento contiene informazioni di proprietà di CARLO GAVAZZI SPACE SpA. Tutti i diritti sono riservati.
All information contained in this document are property of CARLO GAVAZZI SPACE SpA. All right reserved.

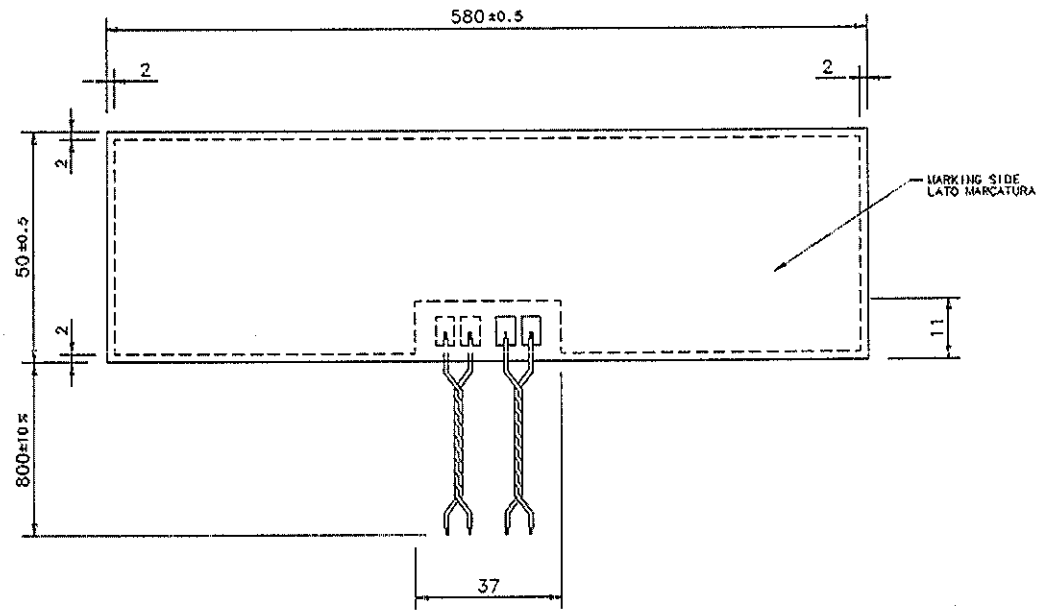

Fig. 4.7: Lower TOF heater drawings, Type C. Each heater is a double layer heater, with 2 equivalent separated circuits. NOTE: Drawing not to scale!

They have been glued on the Lower TOF carbon fiber boxes in the internal side, with ECCOBOND glue, according to the locations specified in the following figures: the heaters on the 4-X plane are mounted on the upper carter of the box, on the internal side.

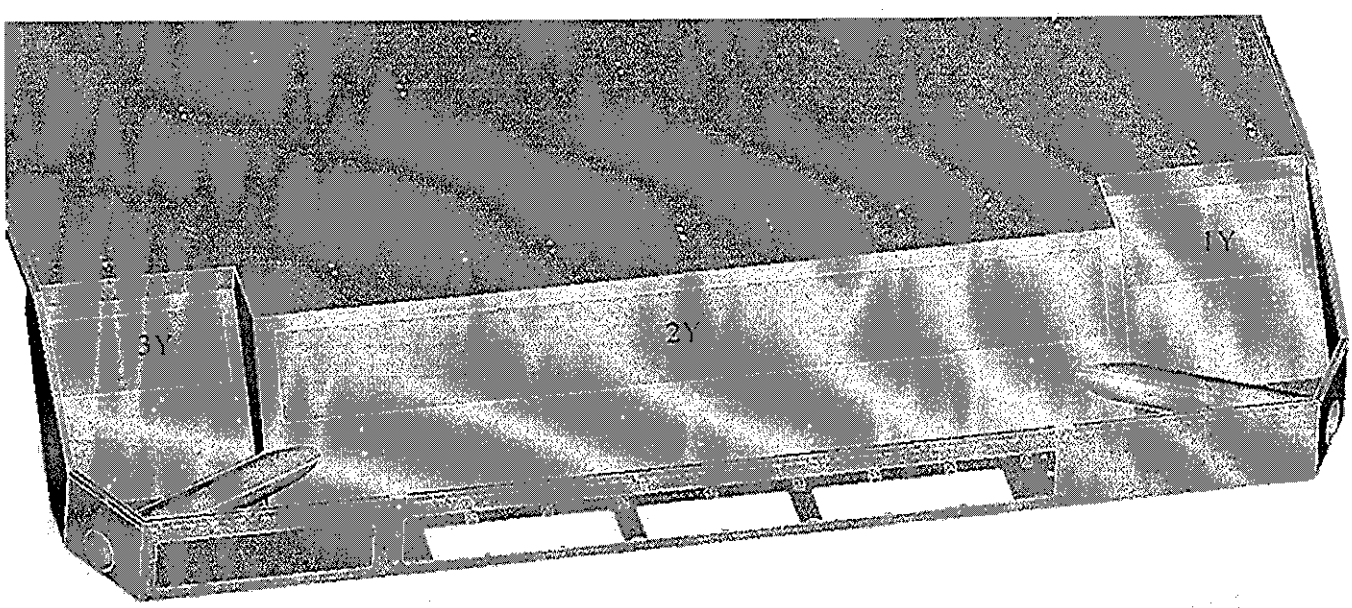

Fig. 4.8: Lower TOF Heater Type A and B (mounted on the 3-Y plane box, below the PMT and light guides). Only one side of the plane is shown, the other side is symmetrical (hosting the other 3 heaters)

Questo documento contiene informazioni di proprietà di CARLO GAVAZZI SPACE SpA. Tutti i diritti sono riservati.
All information contained in this document are property of CARLO GAVAZZI SPACE SpA. All right reserved.

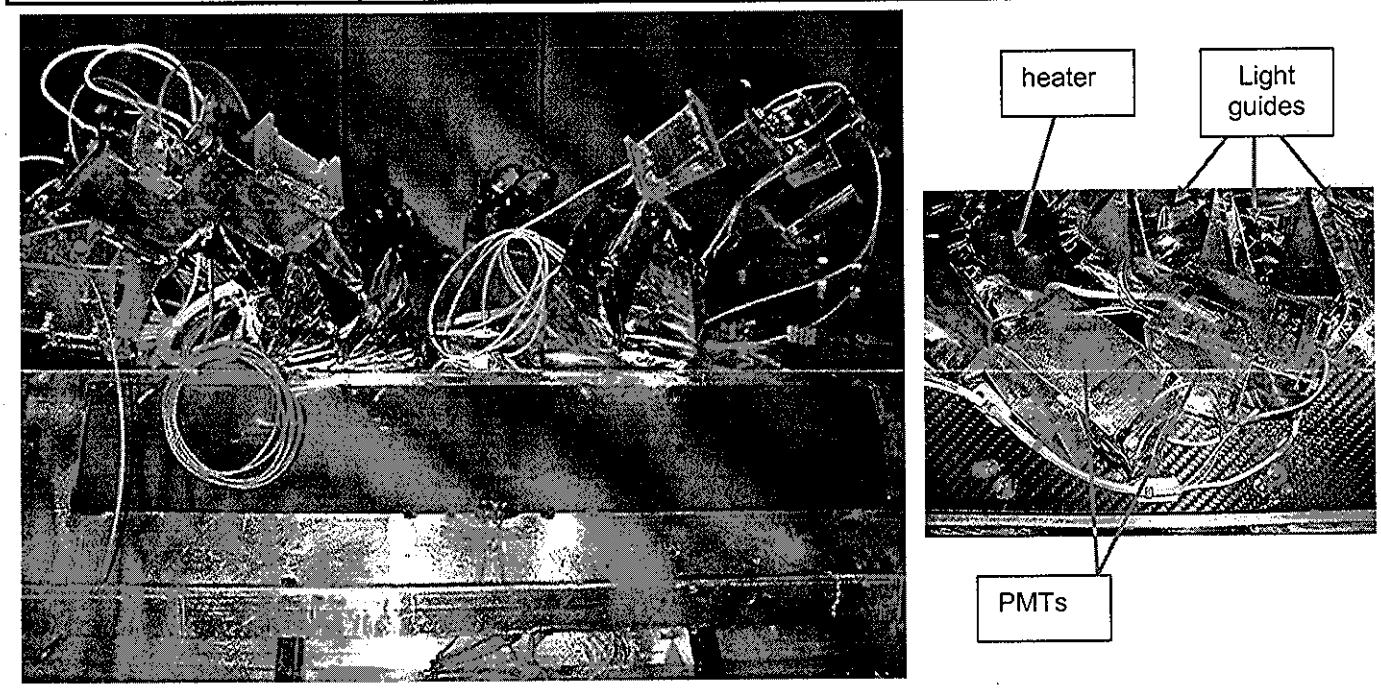

Fig. 4.9: Lower TOF Heater Type B (mounted on central sides of 3-Y plane). The heater is glued on the box on the lower side, below PMTs. On the right, the heater is visible below the PMT light guides after the PMT integration.

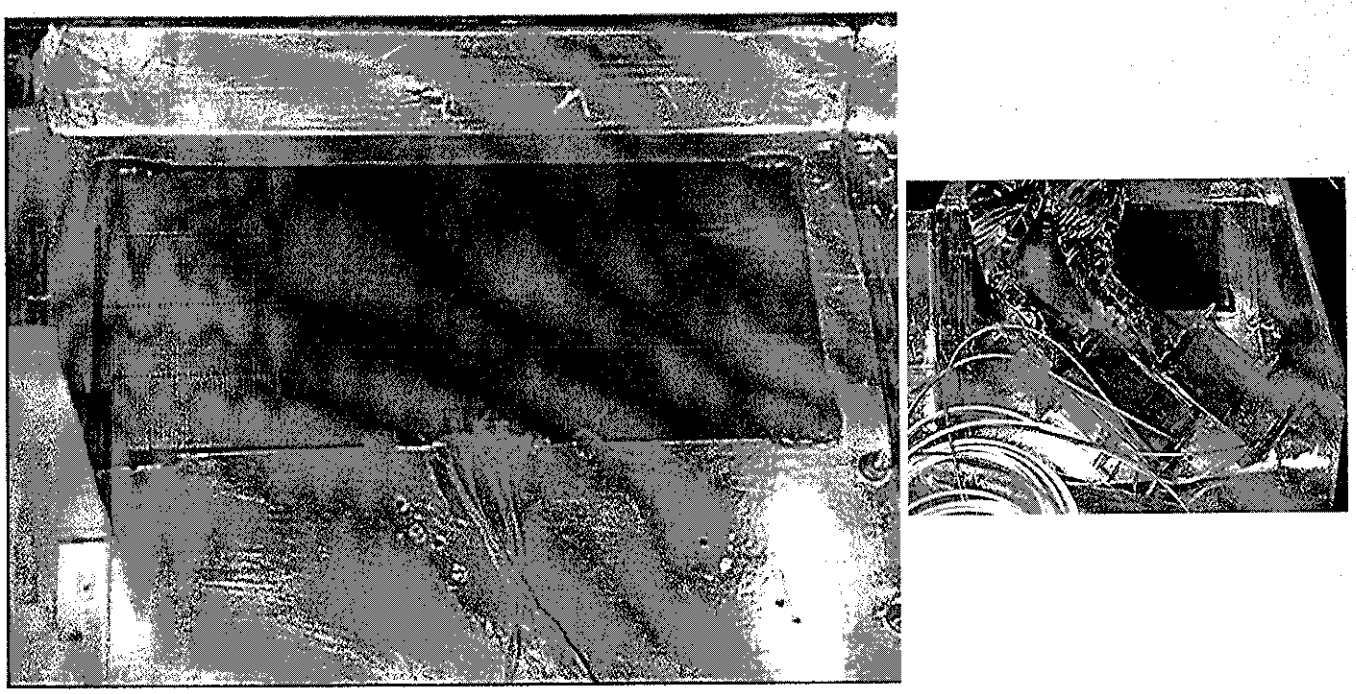

Fig. 4.10: Lower TOF Heater Type A (mounted on both sides of 3-Y plane). The heaters are glued on the box on the lower side, below PMTs. On the right, the heater is visible below the PMT light guides after the PMT integration.

Questo documento contiene informazioni di proprietà di CARLO GAVAZZI SPACE SpA. Tutti i diritti sono riservati.
All information contained in this document are property of CARLO GAVAZZI SPACE SpA. All right reserved.

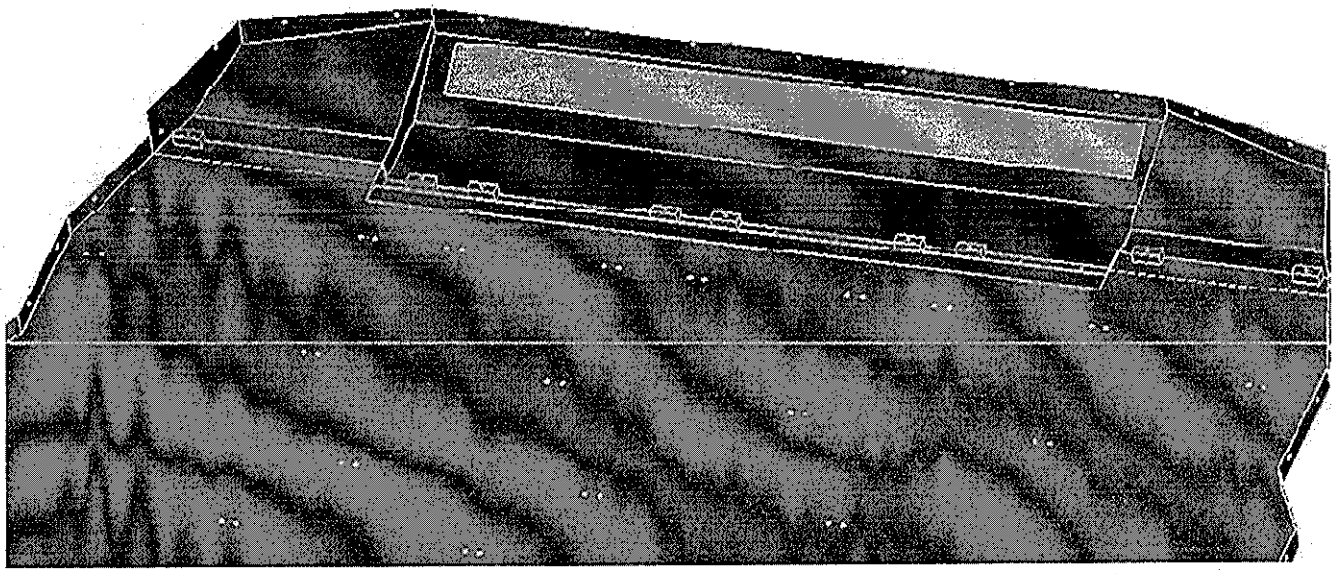

Fig. 4.11: Lower TOF Heater Type C (mounted on the 4-X plane box upper carter, above the PMT and light guides). Only one side of the plane is shown, the other side is symmetrical (hosting an identical heater)

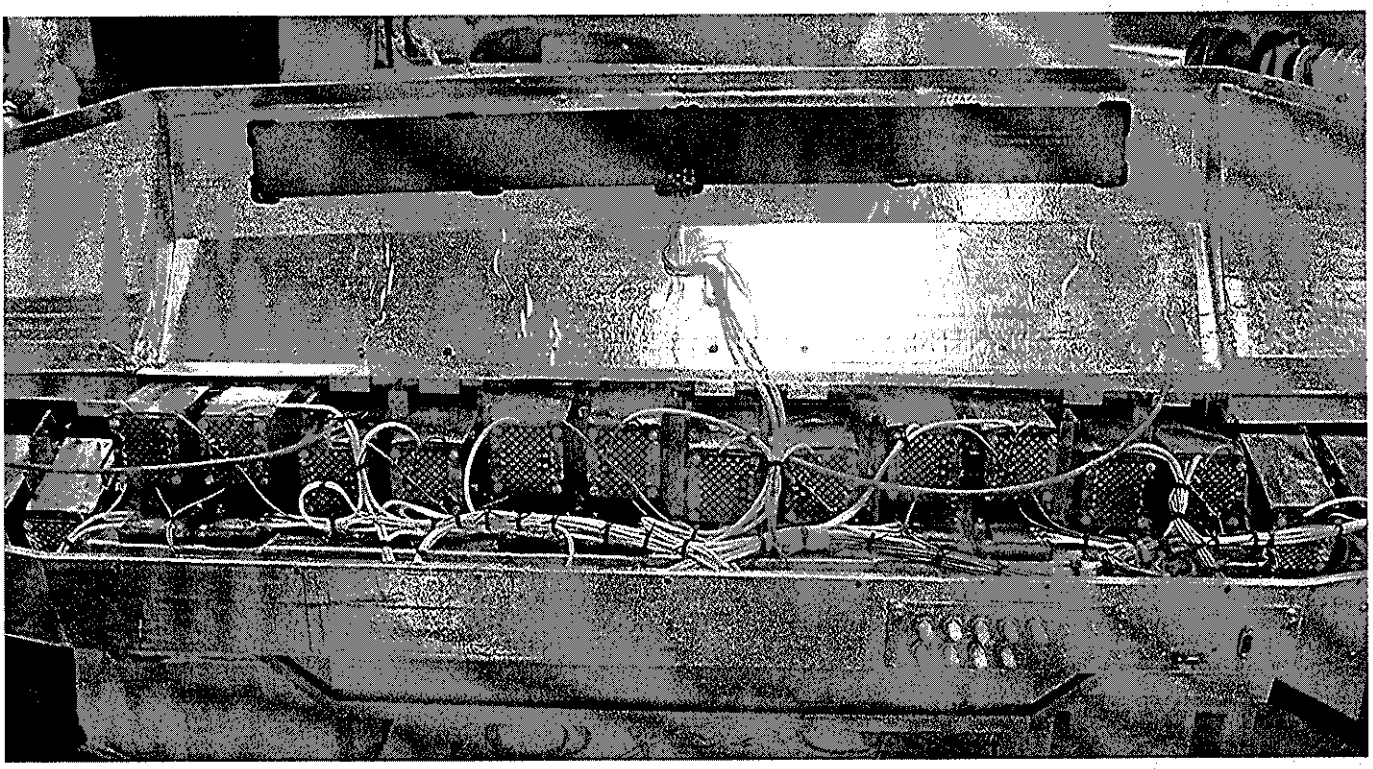

Fig. 4 12: Lower TOF Heater Type C (mounted on both sides of 4-X plane). The heater is glued on the upper carters of the box (in the figure, in "open" configuration)

Questo documento contiene informazioni di proprietà di CARLO GAVAZZI SPACE SpA. Tutti i diritti sono riservati.
All information contained in this document are property of CARLO GAVAZZI SPACE SpA. All right reserved.

4.4 TOF THERMOSTATS MECHANICAL INTERFACE

Lower TOF thermostats drive the heaters, and are placed on the carbon fiber box, on the PMT support structures.

Thermostats are 8 in total, 4 thermostats per plane, 2 thermostats at each side of each plane.

Thermostats are glued with ECCOBOND glue. The location is shown in the following figures:

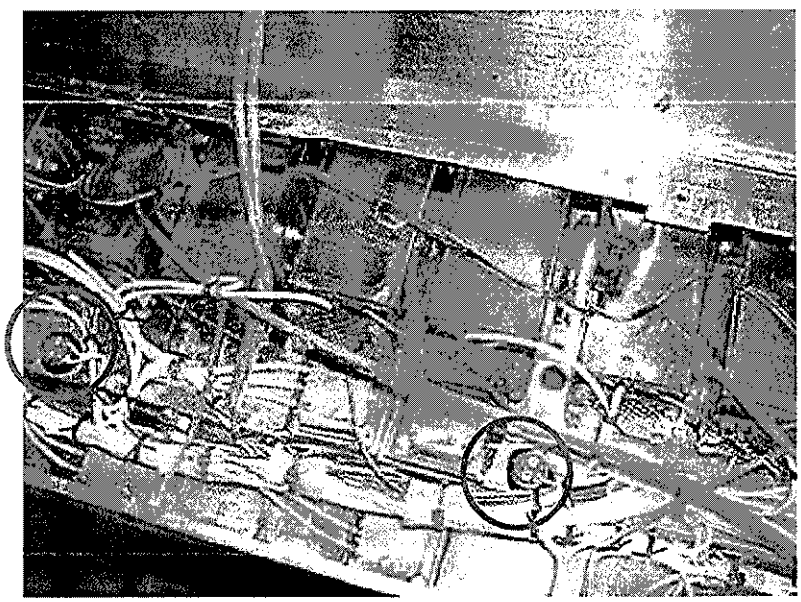

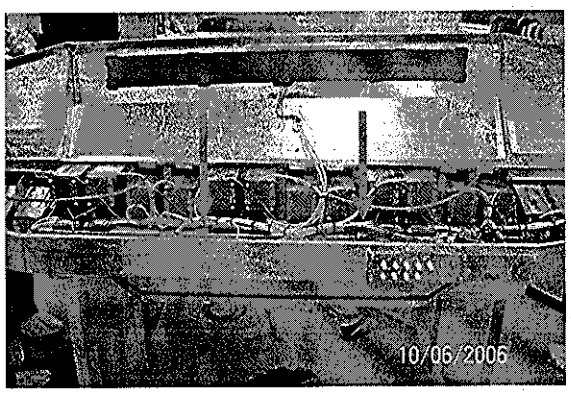

Fig. 4.13: Lower TOF thermostats location (red circles), on the 4-X plane; at right, the location is indicated by the arrows. The other couple of 4-X plane thermostats is mounted in a symmetrical location on the other plane side.

Thermostats on the 3-Y plane are placed in a similar manner.

Questo documento contiene informazioni di proprietà di CARLO GAVAZZI SPACE SpA. Tutti i diritti sono riservati
All information contained in this document are property of CARLO GAVAZZI SPACE SpA. All right reserved.

4.5 TOF HEATERS AND THERMOSTATS ELECTRICAL INTERFACE

The heaters and thermostats electrical scheme is the following:

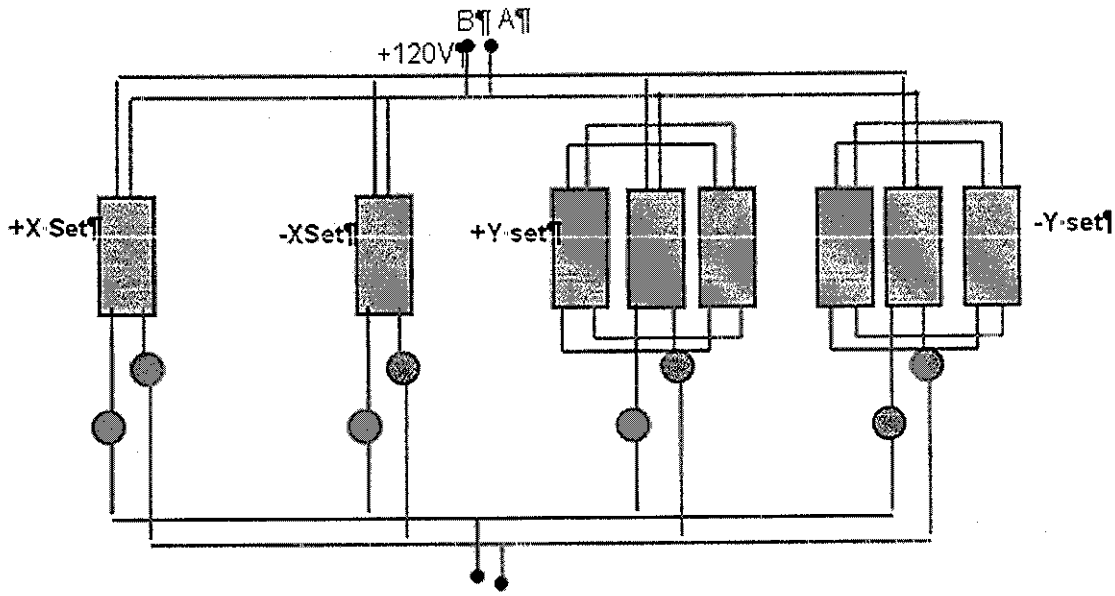

Fig. 4.14: TOF heaters and thermostats electrical scheme.

Each heater patch has a couple of twisted pair wires (4 wires in total) as per the following figure. Each twisted pair is connected to a single feeding line bus (A or B).

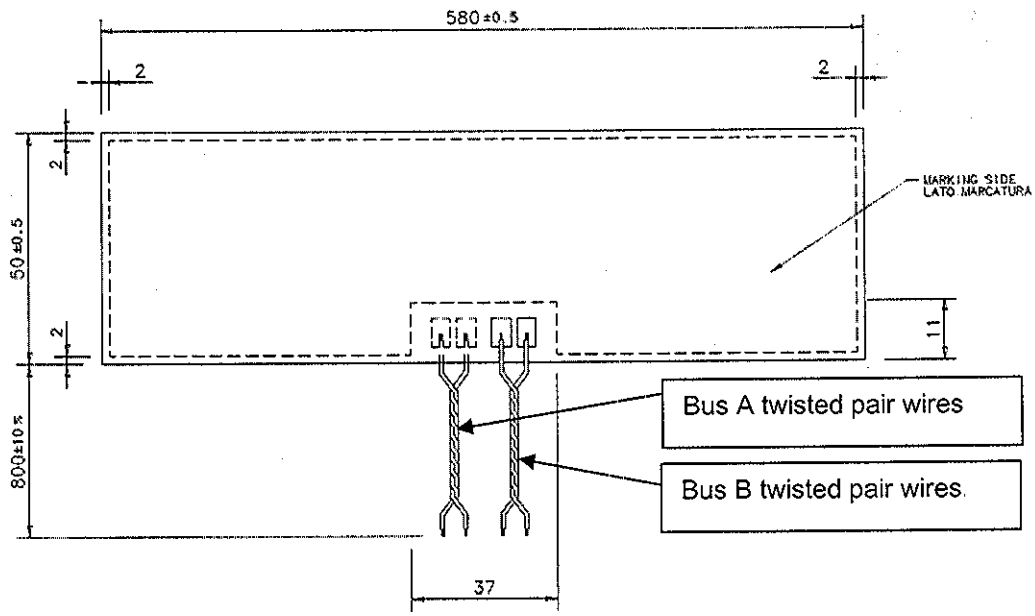

Fig. 4.15: Heater wires.

Thermostats were provided with 2 flying leads each

Heaters and thermostats have been properly connected to the heaters patch panels (present on the TOF mechanical structure) by INFN-BO personnel, and under INFN-BO responsibility. Patch panel connections to the AMS-02 feeding lines is not under CGS responsibility

Questo documento contiene informazioni di proprietà di CARLO GAVAZZI SPACE SpA. Tutti i diritti sono riservati.
All information contained in this document are property of CARLO GAVAZZI SPACE SpA. All right reserved.