AMS–02 TOF HV lines
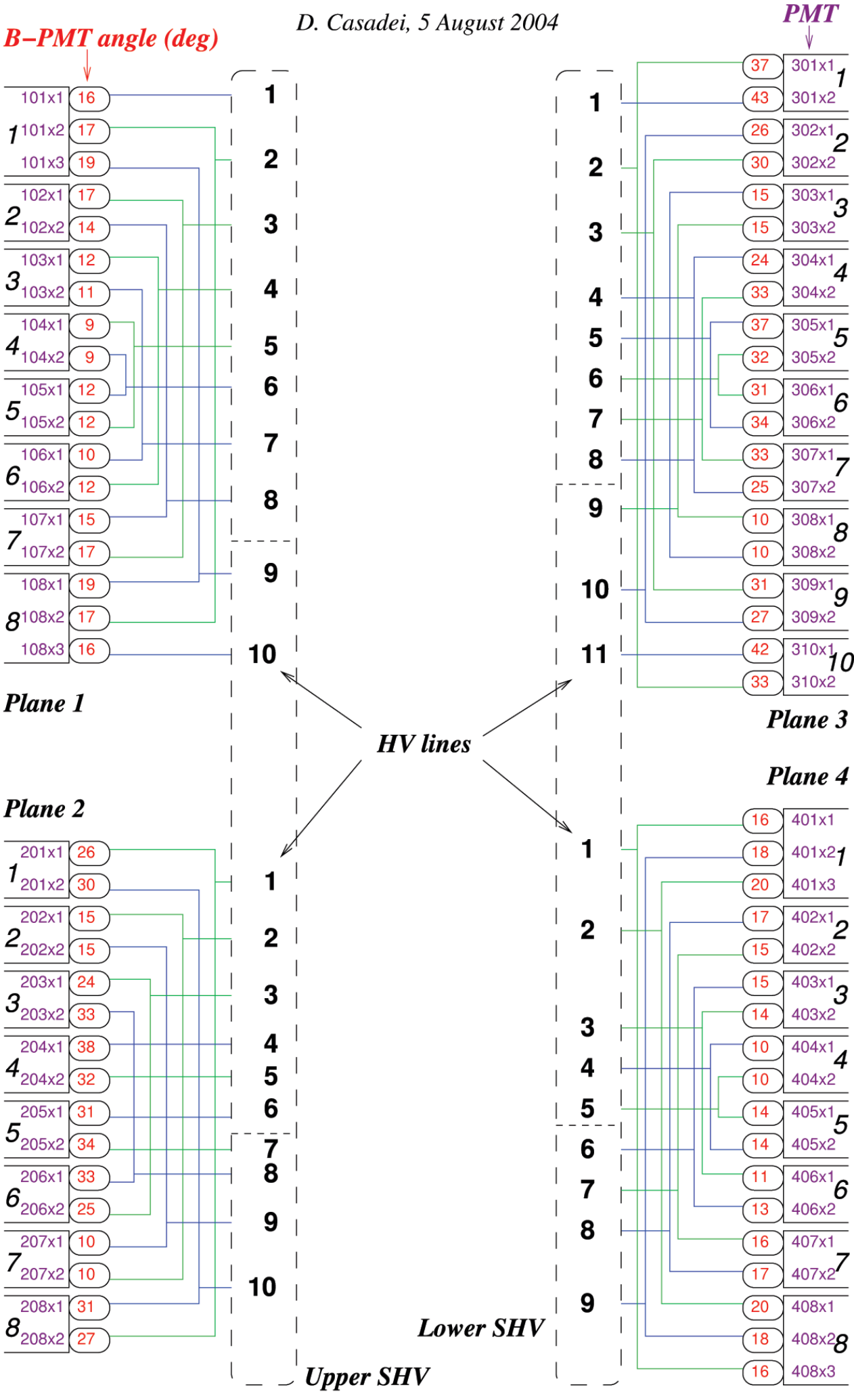
D. Casadei, 5 August 2004