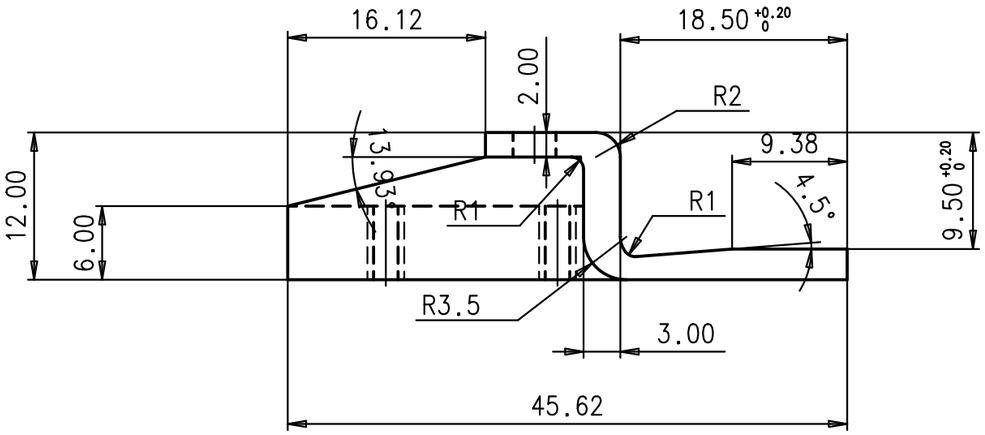

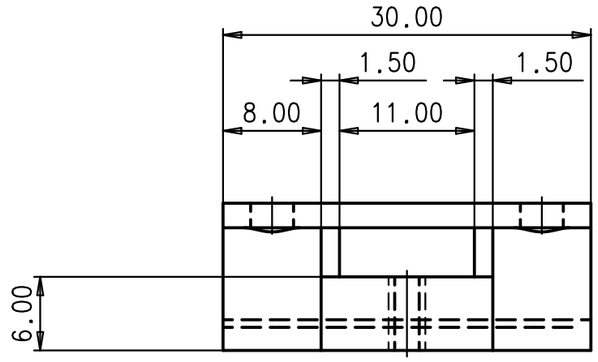

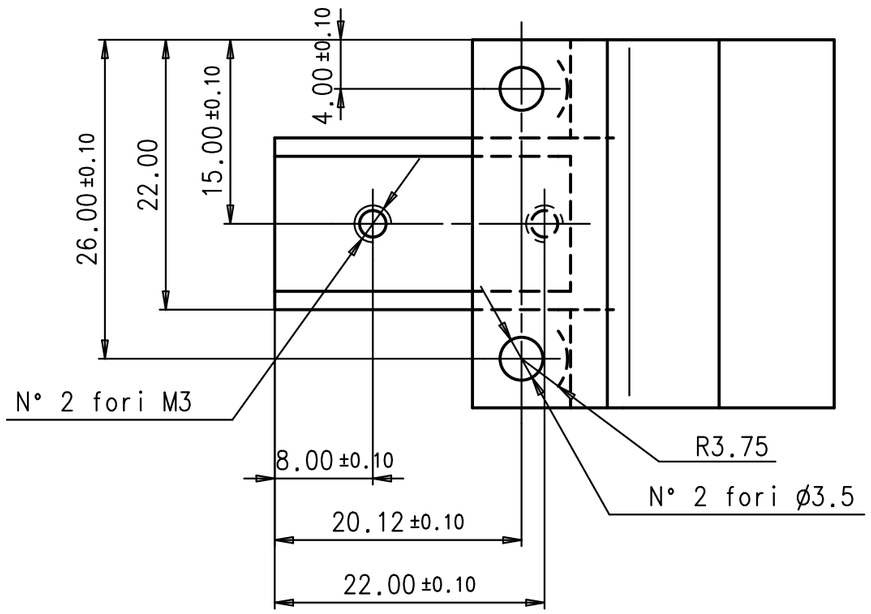

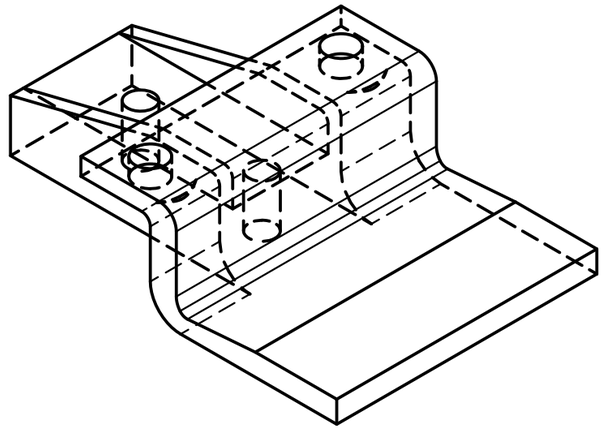

DATE:	DRAWED:	CHECKED:	APPROVED:	QUANTITY:	REV.:
	C.Guandalini		G.Laurenti	300	

MATERIAL: Carbon fibre-Vicotex 1454

SCALE: 2:1

DRAWING TITLE: Supporto inferiore

GEN.TOLL.: ±0.1

GEN.RAD.:

ISTITUTO NAZIONALE DI FISICA NUCLEARE

I.N.F.N.

Sez.di Bologna

ASSEMBLY NAME: LOWER TOF-UPPER TOF

DRAWING NUMBER: ams TOF 01-02-001 UT

SIZE: A3

PROJECT: AMS II TOF