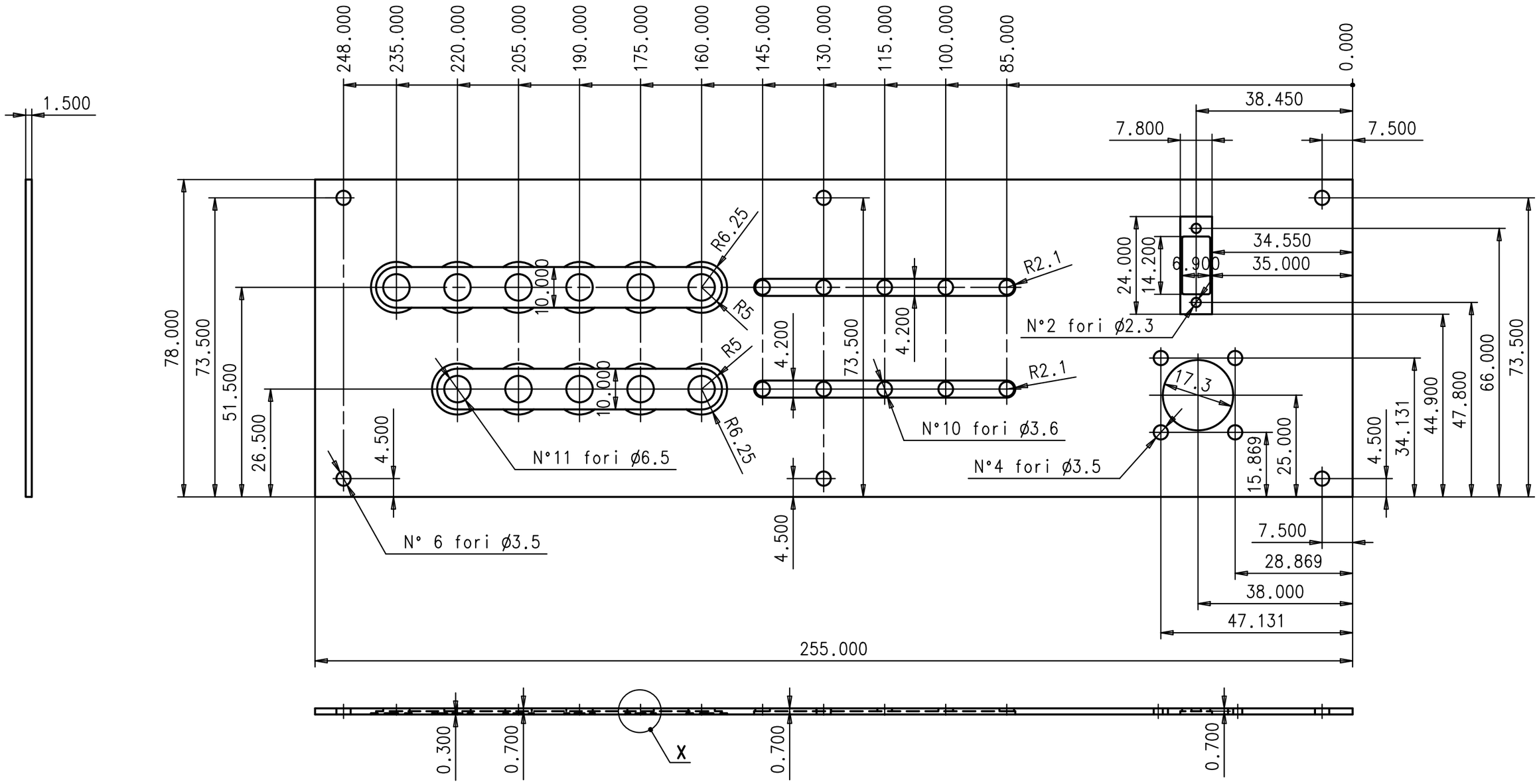

NOTE

SURFACE TREATMENT: ALODINE SPEC.MIL-C-5541
TYPE II, CLASS 3, 1200 GOLD

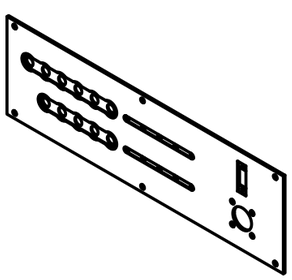

3D VIEW NOT IN SCALE

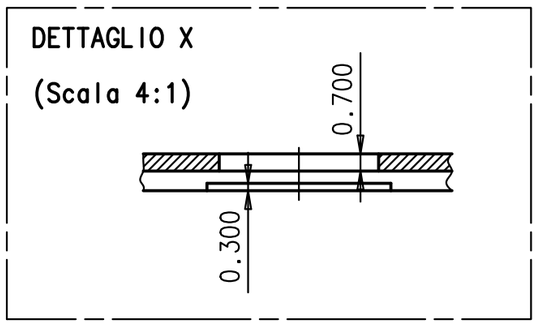

DATE:	DRAWED:	CHECKED:	APPROVED:	QUANTITY:	REV.:
05/06	C.Guandalini		G.Laurenti	1	

MATERIAL: Al 7075 T7351 QQ-A-250/12	SCALE: 1:1
DRAWING TITLE: Patch panel S-HV-Sfec-Heater plane 3	GEN.TOLL.: ±0.10
	GEN.RAD.:
ASSEMBLY NAME: LOWER TOF	DRAWING NUMBER: ams TOF 05-002 LT
PROJECT: AMS II TOF	

ISTITUTO NAZIONALE DI FISICA NUCLEARE

I.N.F.N.

Sez.di Bologna

SIZE: A3

SHEET: 1/1