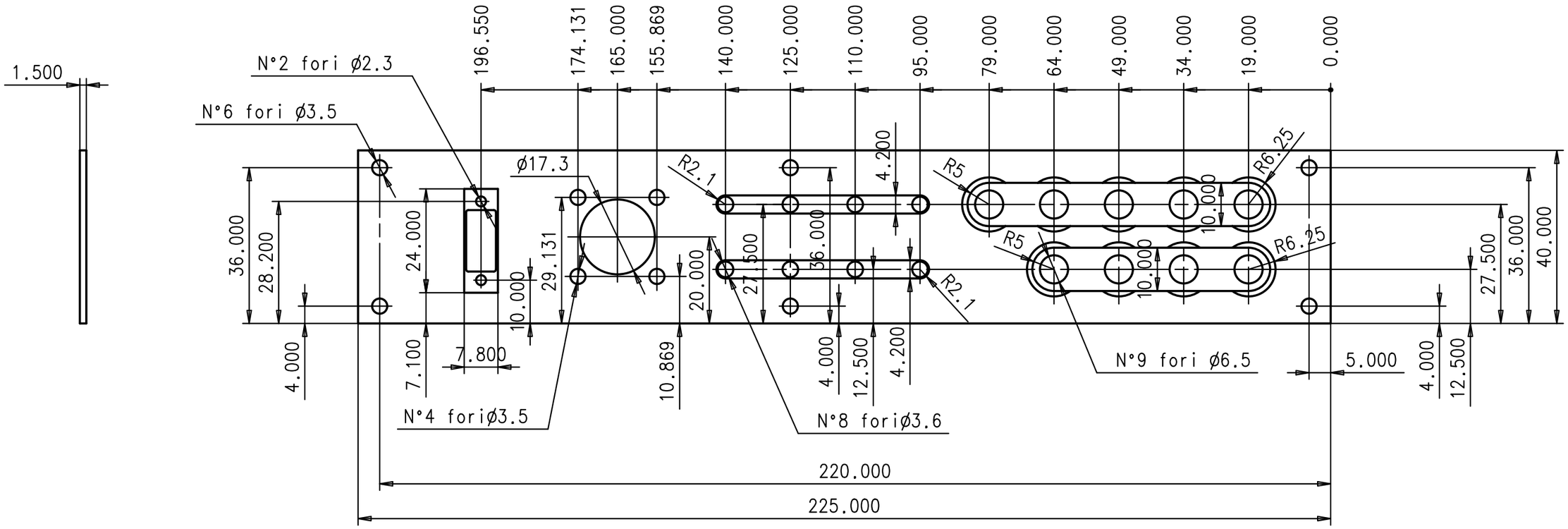

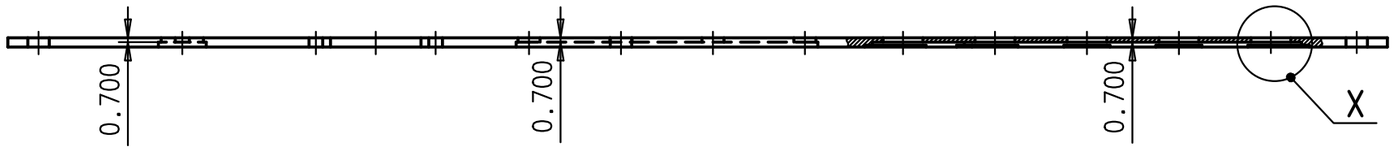

NOTE

SURFACE TREATMENT: ALODINE SPEC.MIL-C-5541
TYPE II CLASS 3 1200 GOLD

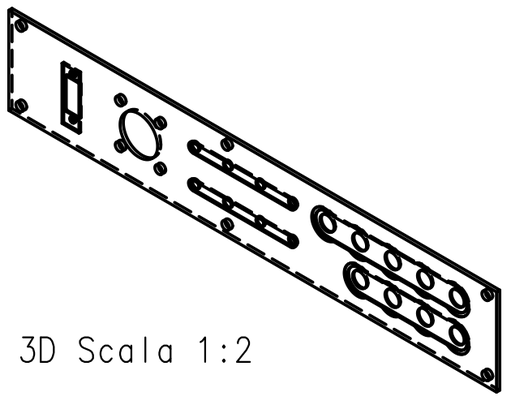

3D Scala 1:2

DETTAGLIO X
(SCALA 4:1)

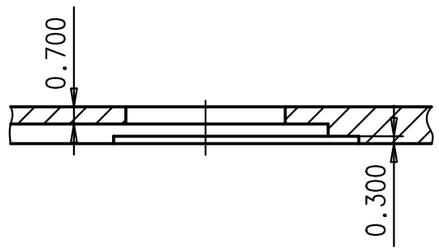

DATE:	DRAWED:	CHECKED:	APPROVED:	QUANTITY:	REV.:
04/06	C.Guandalini		G.Laurenti	1	
MATERIAL: Al 7075 T7351 QQ-A-250/12			SCALE: 1:1	ISTITUTO NAZIONALE DI FISICA NUCLEARE	
DRAWING TITLE: Patch panel S-HV-Sfec-Heater plane 4			GEN.TOLL.: ±0.10	I.N.F.N.	
			GEN.RAD.:		
ASSEMBLY NAME: LOWER TOF		DRAWING NUMBER: ams TOF 06-002 LT		Sez.di Bologna	
				SIZE: A3	
PROJECT: AMS II TOF				SHEET: 1/1	