CARLO GAVAZZI SPACE SpA

RICH SYSTEM

Tipo Doc.: *Doc.Type:*	REPORT			N° DRD: *DRD N°:*	NA
N° Doc.: *Doc. N° :*	**RICSYS-RP-CGS-006**	Ediz.: *Issue:* **1**	Data: *Date:* **29/09/2003**	Pagina *Page* **1**	Di *Of* **28**
Titolo : *Title :*	TOF B/B THERMAL TEST REPORT				

	Nome & Funzione *Name & Function*	Firma *Signature*	Data *Date*
Preparato da: *Prepared by:*	Cova M. (DT/MT/)		
Approvato da: *Approved by:*	Cinquepalmi C.. (PC/CC) Legramandi S. (PA/SF) Vettore C. (DT/MT/)		
Applicazione autorizzata da: *Application authorized by:*	Sardo G. (DT/MT/)		
Customer / Higher Level Contractor			
Accettato da: *Accepted by:*			
Approvato da: *Approved by:*			

LISTA DI DISTRIBUZIONE *DISTRIBUTION LIST*	N	A	I
Interna / *Internal*			
Molina M. (DT/MT/)	1		x
Esterna / *External*			
ASI	1	x	

N=Numero di copie A=Applicazione I=Informazione
N=Number of copy A=Application I=Information

Gestione documenti:
Data Management: ----------
Firma / *egnature* Data / *Date*

File: RICSYS-RP-CGS-006_issue1.doc

Questo documento contiene informazioni di proprietà di CARLO GAVAZZI SPACE SpA. Tutti i diritti sono riservati.
All information contained in this document are property of CARLO GAVAZZI SPACE SpA. All right reserved.

REGISTRAZIONE DELLE MODIFICHE / *CHANGE RECORD*

EDIZIONE *ISSUE*	DATA *DATE*	AUTORIZZAZIONE *CHANGE AUTHORITY*	OGGETTO DELLA MODIFICA E SEZIONI AFFETTE *REASON FOR CHANGE AND AFFECTED SECTIONS*
1	29/09/2003		First Issue

Questo documento contiene informazioni di proprietà di CARLO GAVAZZI SPACE SpA. Tutti i diritti sono riservati.
All information contained in this document are property of CARLO GAVAZZI SPACE SpA. All right reserved.

LISTA DELLE PAGINE VALIDE / *LIST OF VALID PAGES*

PAGINA *PAGE*	EDIZIONE *ISSUE*	PAGINA *PAGE*	EDIZIONE *ISSUE*	PAGINA *PAGE*	EDIZIONE *ISSUE*	PAGINA *PAGE*	EDIZIONE *ISSUE*	PAGINA *PAGE*	EDIZIONE *ISSUE*
1 – 28	1								

Questo documento contiene informazioni di proprietà di CARLO GAVAZZI SPACE SpA. Tutti i diritti sono riservati.
All information contained in this document are property of CARLO GAVAZZI SPACE SpA. All right reserved.

TABLE OF CONTENT

1. SCOPE 5

2. DOCUMENTS 6

2.1 APPLICABLE DOCUMENTS 6
2.2 REFERENCE DOCUMENTS 6

3. ACRONYMS 6

4. PARTICIPANTS REQUIRED 7

4.1 GENERAL 7
4.2 RESPONSIBILITY 7
4.3 QA WITNESS OF TEST AND SIGN-OFF 7
4.4 NON CONFORMANCE AND FAILURES 7
4.5 CALIBRATION REQUIREMENTS 7

5. TEST ARTICLE 8

6. TEST CONFIGURATION 12

6.1 TEST SET-UP 12
6.2 CONTROL POINT 12
6.3 SENSOR POSITION 12

7. INSTRUMENTAL AND TEST EQUIPMENT 15

8. TEST CONDITION 17

9. TEST PROFILE 17

10. CORRELATION SUCCESS CRITERIA 18

11. TEST SUCCESS CRITERIA 19

12. TEST PROCEDURE VARIATION SHEET 19

13. TEST DATA SHEETS 25

13.1 DATA SHEETS FILLING UP 25

LIST OF TABLES

Tab. 7-1 Instrument list 16
Tab. 9-1 UUT configurations 17
Tab. 10-1: Validation process 18

LIST OF FIGURES

Fig. 5-1 PMT assembly exploded view 8
Fig. 5-2 PMT assembly 8
Fig. 5-3 Carbon fiber box, part of Tof subdetector 9
Fig. 5-4 Plexiglas bracket inside the carbon box 10
Fig. 5-6 Electrical circuits to simulate PMT dissipation 11
Fig. 5-7Equivalent resistances of the PMT's electronic boards 11
Fig. 6-1Thermal vacuum chamber concept 12

Questo documento contiene informazioni di proprietà di CARLO GAVAZZI SPACE SpA. Tutti i diritti sono riservati.
All information contained in this document are property of CARLO GAVAZZI SPACE SpA. All right reserved.

1. SCOPE

This document describes the test procedure applicable to the thermal tests of a subassembly of ToF (Time of Flight), a subdetector included in AMS02 experiment.

The aim of the test is to obtain temperature data to be used for validation of the mathematical model of the subassembly itself and to drive the thermal design of the internal part of the ToF carbon fibre box containing PMTs.

The test results shall be collected in a Test Report.

Questo documento contiene informazioni di proprietà di CARLO GAVAZZI SPACE SpA. Tutti i diritti sono riservati.
All information contained in this document are property of CARLO GAVAZZI SPACE SpA. All right reserved.

2. DOCUMENTS

2.1 APPLICABLE DOCUMENTS

AD	Doc.Number	Issue/Date	Rev.	Title/Applicability
1	AMS02-IC-CGS-001	2/June 2003	-	Ams-02 Thermal Control System Interface Control Document

2.2 REFERENCE DOCUMENTS

N/A

3. ACRONYMS

CGS Carlo Gavazzi Space
FEE Front End Electronics
NA Not Applicable
P/N Part Number. Also called Configuration Item C.I.
PA Product Assurance
PVS Procedure Variation Sheet
QA Quality Assurance
S/N Serial Number
PMT Photo Multiplier Tube
UUT Unit Under Test
TOF Time of Flight
TRP Temperature Reference Point
FM Flight model

Questo documento contiene informazioni di proprietà di CARLO GAVAZZI SPACE SpA. Tutti i diritti sono riservati.
All information contained in this document are property of CARLO GAVAZZI SPACE SpA. All right reserved.

4. PARTICIPANTS REQUIRED

4.1 GENERAL

All test will be performed under QA surveillance in accordance with, and following detailed procedure of applicable PA Plan. Start of the Test shall be notified to Prime Contractor and/or Customer as applicable.

4.2 RESPONSIBILITY

The technical responsibility for testing and test results is up to the Engineering department.

QA is responsible for ensuring that all the agreed procedures are carefully observed, that test equipment and instrumentation used during testing is calibrated and within validity date: that the test data sheets are recorded in the Test Report and signed by the operators and QA witnesses, that all non conforming condition and test results are properly documented and notified to the Prime Contractor, and that all requirements of applicable PA Plan, specification and Statement of Work pertaining to the acceptance tests, are fully satisfied.

4.3 QA WITNESS OF TEST AND SIGN-OFF

QA inspector, or its delegate, shall witness the tests described in this procedure in accordance to the requirement specified in the applicable PA Plans (only for FM model)

4.4 NON CONFORMANCE AND FAILURES

Any malfunction/defect which occurres during the test will be processed along the Non Conformance Procedure described in the applicable PA Plans.

4.5 CALIBRATION REQUIREMENTS

All instruments used for testing shall be calibrated.

Evidence of certification shall be provided by a label attached to the instruments itself, showing the calibration date, the expiring date and the signature of the operator.

Questo documento contiene informazioni di proprietà di CARLO GAVAZZI SPACE SpA. Tutti i diritti sono riservati.
All information contained in this document are property of CARLO GAVAZZI SPACE SpA. All right reserved.

5. TEST ARTICLE

The test article consists of:

- 2 complete PMT assemblies (Fig. 5-1 and Fig. 5-2), each one including
  - 3 Electronic boards potted together
  - 1 PMT (Photo-Multiplier Tube)
  - 1 Polycarbonate case
  - 1 Optical Contact

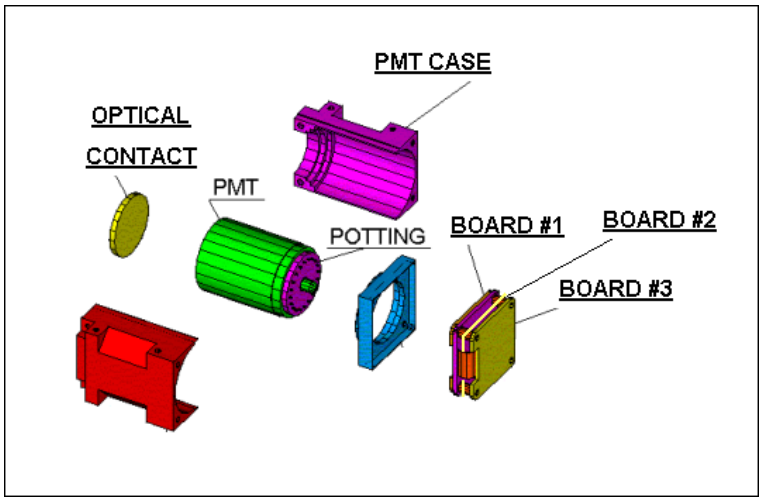

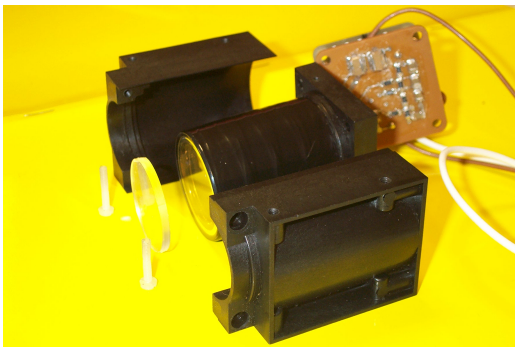

Fig. 5-1 PMT assembly exploded view

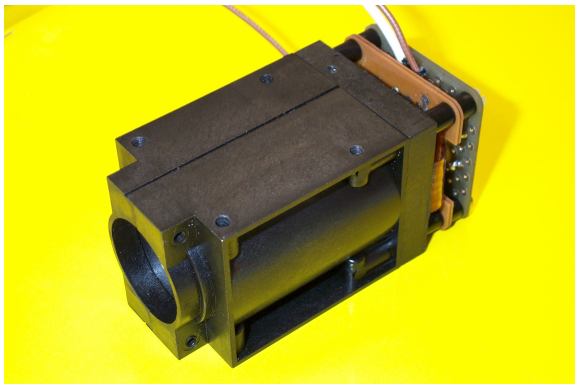

Fig. 5-2 PMT assembly

- A Plexiglas bracket
- A carbon fibre case (which represent the extreme of an entire side box of ToF, as shown in Fig. 5-3)
- Air foam covering, characterized by open cells

Questo documento contiene informazioni di proprietà di CARLO GAVAZZI SPACE SpA. Tutti i diritti sono riservati.
All information contained in this document are property of CARLO GAVAZZI SPACE SpA. All right reserved.

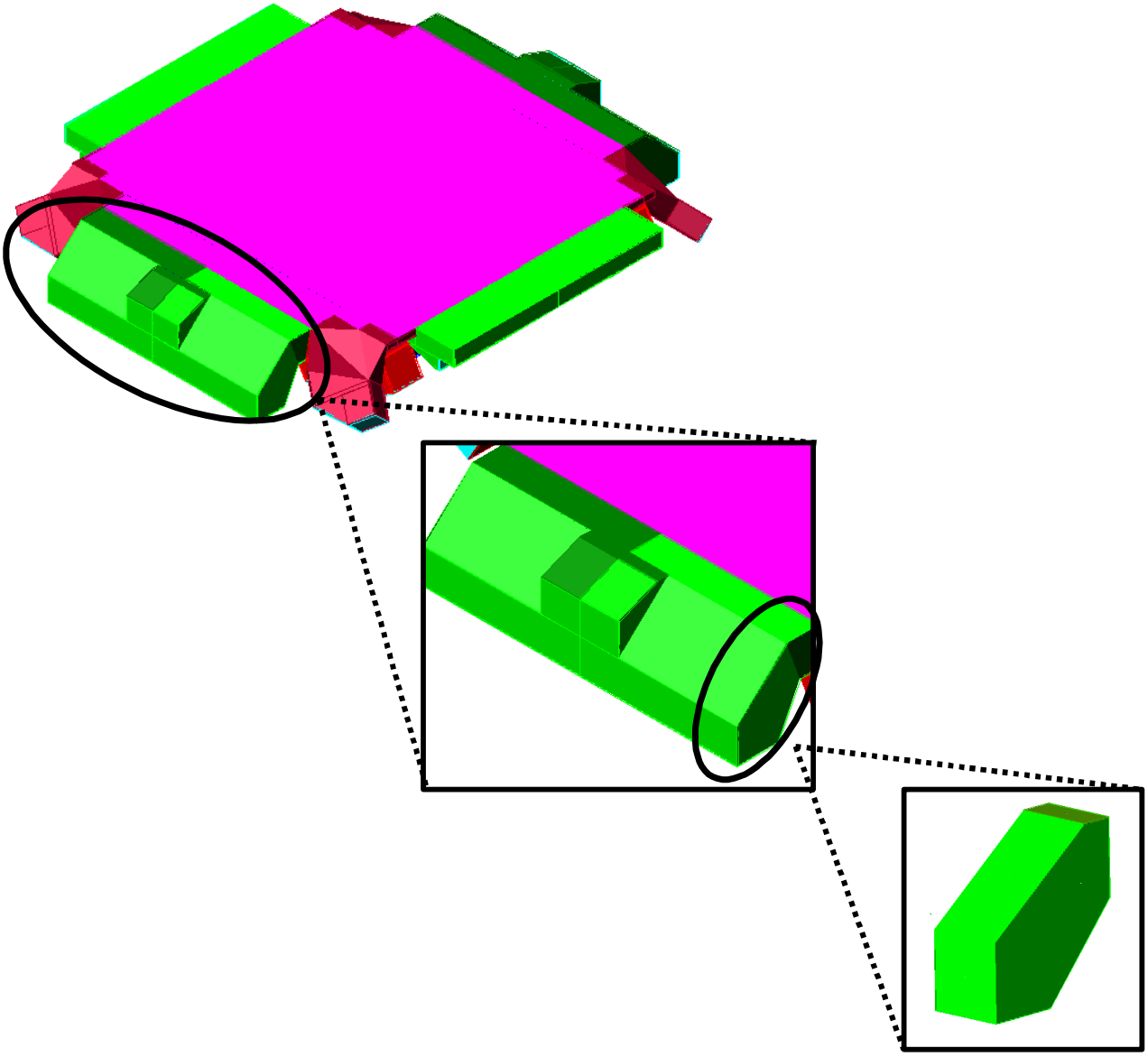

Fig. 5-3 Carbon fiber box, part of Tof subdetector

Questo documento contiene informazioni di proprietà di CARLO GAVAZZI SPACE SpA. Tutti i diritti sono riservati.
All information contained in this document are property of CARLO GAVAZZI SPACE SpA. All right reserved.

The ToF carbon fibre case subassembly shall be a box made of carbon panels glued together. The internal surfaces of this box shall be covered with an aluminum tape in order to simulate the internal optical properties (the inner part of the real box shall be aluminized as a base-line).
A Plexiglas bracket shall be mechanically fixed inside the case by means of 3 nylon screws. Two PMT assemblies shall be fixed on the bracket, each one by means of 4 nylon screws.

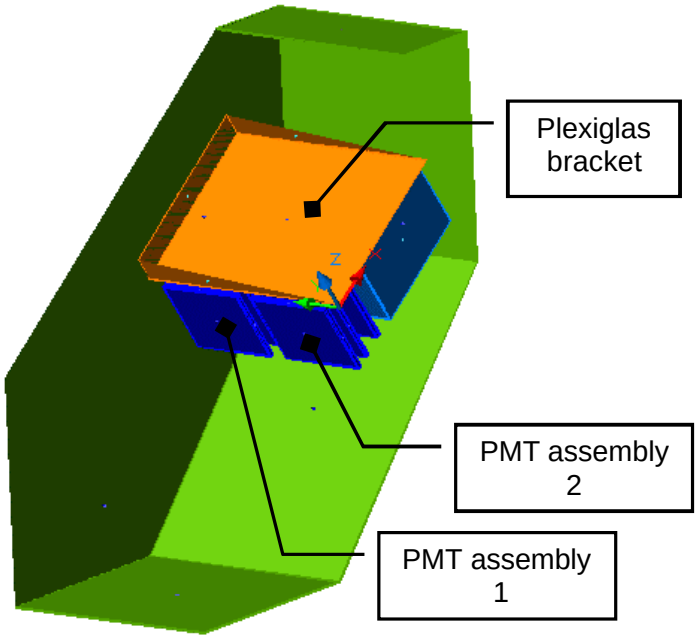

Fig. 5-4 Plexiglas bracket inside the carbon box

The dissipation of the PMT electronic is located on the central board (13.4 mW) and on the inner board (46.6 mW).
The experience CGS has acquired during test under other framework has highlighted that at this level of power dissipation, it is extremely difficult to get significant results from testing unless to have high accuracy temperature sensors and/or reasonable dissipative sources.
If testing had to be performed with this dissipation figure the relative gradient temperature errors could be quite high due to the low measured temperature gradient.
In order to avoid this problem the tests shall be performed with an higher dissipation value (nearly 1 W) in order to get reliable results and allow the model correlation; once the correlation activity is concluded ,the real dissipation values shall be put in the correlated model to obtain the realistic temperature predictions under nominal working conditions.
In order to reach a dissipated power of 1W, 12 resistances of 9.1 kΩ shall be glued on the central board and 12 resistances of 2.7 kΩ on the inner board; both circuits shall be fed with a max voltage of 9,31V.

Questo documento contiene informazioni di proprietà di CARLO GAVAZZI SPACE SpA. Tutti i diritti sono riservati.
All information contained in this document are property of CARLO GAVAZZI SPACE SpA. All right reserved.

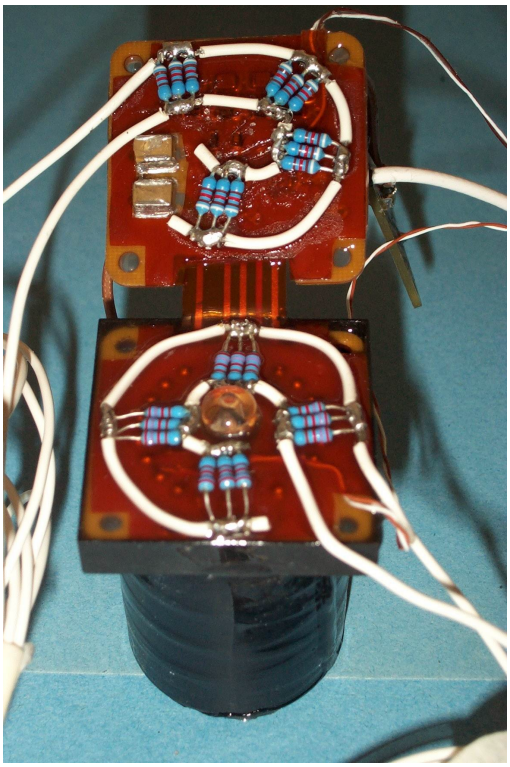

Fig. 5-6 Electrical circuits to simulate PMT dissipation

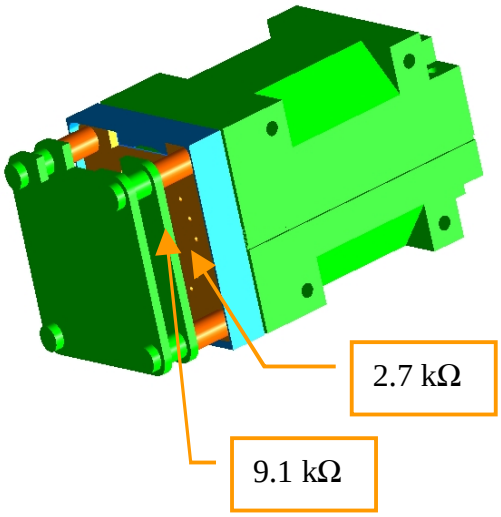

Fig. 5-7Equivalent resistances of the PMT's electronic boards

For a best thermal flow transmission a heat transfer compound shall be put between the carbon case bottom wall and the base plate of the thermal vacuum chamber, on which the carbon case is fixed . During the test, the carbon fiber box shall be covered with Air Foam open cell (at least 30 mm thick) to minimize the heat exchange with the environment and to uniform the external temperature.

Questo documento contiene informazioni di proprietà di CARLO GAVAZZI SPACE SpA. Tutti i diritti sono riservati.
All information contained in this document are property of CARLO GAVAZZI SPACE SpA. All right reserved.

6. TEST CONFIGURATION

6.1 TEST SET-UP

The tests shall be made in a thermal vacuum chamber, which can modify its internal ambient, simulating the space condition (temperature and pressure).

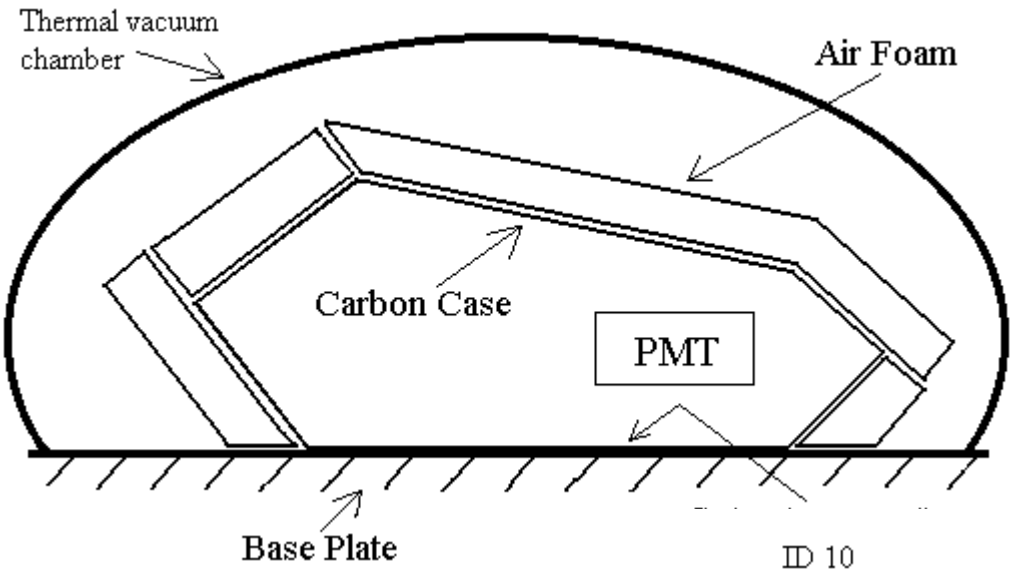

Fig. 6-1Thermal vacuum chamber concept

6.2 CONTROL POINT

The control point for the test will be the bottom wall of the carbon case (with reference at Fig. 6-1 ID number 10).

6.3 SENSOR POSITION

The thermocouples will be placed on the UUT according to the following figures (Fig. 6-2 and Fig. 6-3).

There shall be 5 thermocouples on the first PMT, 4 on the second one, 5 on the walls of the carbon box and 1 on the bracket.

Questo documento contiene informazioni di proprietà di CARLO GAVAZZI SPACE SpA. Tutti i diritti sono riservati.
All information contained in this document are property of CARLO GAVAZZI SPACE SpA. All right reserved.

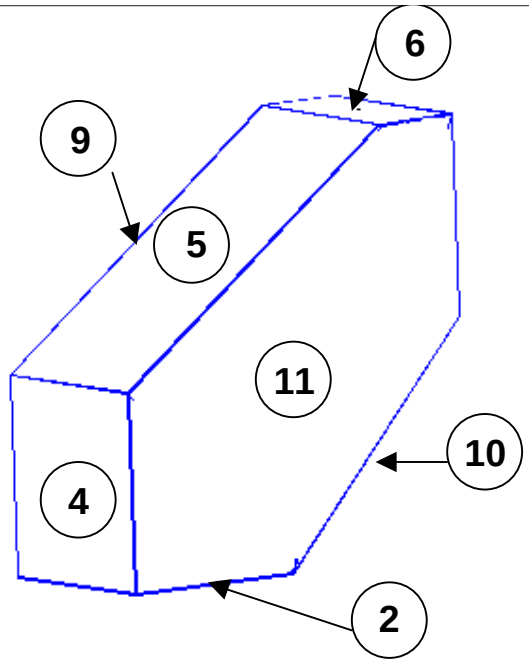

Fig. 6-2 Thermocouples position on the carbon box

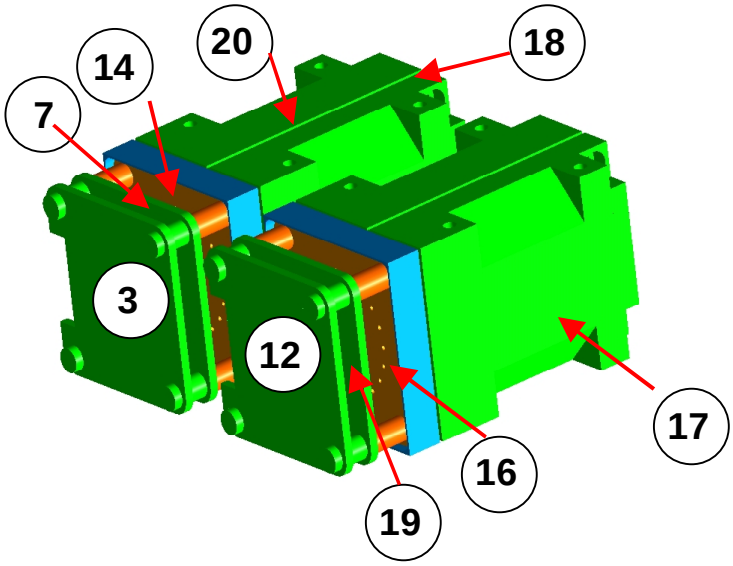

Fig. 6-3 Thermocouples position on PMTs

Questo documento contiene informazioni di proprietà di CARLO GAVAZZI SPACE SpA. Tutti i diritti sono riservati.
All information contained in this document are property of CARLO GAVAZZI SPACE SpA. All right reserved.

The following sensors shall be used:

Sensor	Position
1	Bracket between PMTs and carbon box
2	Bottom wall of the carbon box
3	First electronic board (PMT assembly 1)
4	Front wall of the carbon box
5	Top/Front wall of the carbon box
6	Top wall of the carbon box
7	Second electronic board (PMT assembly 1)
9	Side wall of the carbon box
10	Rear/Bottom wall of the carbon box
11	Side wall of the carbon box
12	First electronic board (PMT assembly 2)
14	Third electronic board (PMT assembly 1)
16	Third electronic board (PMT assembly 2)
17	PMT 2
18	PMT case (PMT assembly 1)
19	Second electronic board (PMT assembly 2)
20	PMT 1

Tab. 6-1 Thermocouples position

Questo documento contiene informazioni di proprietà di CARLO GAVAZZI SPACE SpA. Tutti i diritti sono riservati.
All information contained in this document are property of CARLO GAVAZZI SPACE SpA. All right reserved.

7. INSTRUMENTAL AND TEST EQUIPMENT

The complete list of the instrumentation used during the test shall be recorded in table 7.-1.
The list shall be filled up during tests and reported in Test Report.

Questo documento contiene informazioni di proprietà di CARLO GAVAZZI SPACE SpA. Tutti i diritti sono riservati.
All information contained in this document are property of CARLO GAVAZZI SPACE SpA. All right reserved.

Tab. 7-1 Instrument list

N.	EQUIPMENT	MANUFACTURER	P/N	S/N	ACCURACY	NEXT CAL. DATE	REMARKS
1	Vacuum Thermal Chamber	Tenney Space Jr.		12116	N/A	N/A	
2	DATA Acquisition unit HP Data Log.	HP	HP34970A	US 37014624	N/A	N/A	
3	T-type thermocouples	RS components	RS 219-4696	N/A	± 1.5	N/A	

Questo documento contiene informazioni di proprietà di CARLO GAVAZZI SPACE SpA. Tutti i diritti sono riservati.
All information contained in this document are property of CARLO GAVAZZI SPACE SpA. All right reserved.

8. TEST CONDITION

- The CI shall be tested in its defined configuration: it shall properly closed, all electrical loads shall be present and the CI interface function(s) shall be simulated.
- Unless otherwise specified, all measurements are to be performed at a relative humidity between 30% and 60% RH
- All tests, unless otherwise specified, shall be performed in a vacuum chamber at a pressure lower than or equal to 1.3×10^{-3} Pa
- All tests, unless otherwise specified, shall be performed internally to CGS laboratories in a proper area. General disposition shall be applied to maximize personnel safety from potential hazards
- Skilled personnel shall be employed
- All used instruments shall meet the necessary accuracy and shall not degrade the UUT performances.

9. TEST PROFILE

The following dissipation profile shall be applied :

CONFIGURATION	Rear/Bottom wall ID10 Control point (°C)	Supply Tension (V)	Dissipation (W)
A	-20	9.31	1.0
B	+20	9.31	1.0

Tab. 9-1 UUT configurations

Questo documento contiene informazioni di proprietà di CARLO GAVAZZI SPACE SpA. Tutti i diritti sono riservati.
All information contained in this document are property of CARLO GAVAZZI SPACE SpA. All right reserved.

10.CORRELATION SUCCESS CRITERIA

After test execution, the temperatures of the monitored items have to be reported in the following table, making a correlation between tests and simulations.

ITEM	Temperature Prediction	Temperature measured	DT
	T_S	T_T	$(T_T - T_S)$
PMT 1			
PMT 2			
Top wall			
[...]			

Tab. 10-1: Validation process

In the second column there are the results of Sinda Analysis (T_S) and they represent the prediction of the temperature during a test. The following column shall contain the thermal values obtained during the thermal-vacuum test (T_T). Thanks to these results it's possible to complete the third column called 'ΔT', which shall contain the difference between T_T and T_S.

The correlation shall be considered successfully reached, if the standard deviation of all temperatures differences shall be less than 3°C according to the following expression:

$$s = \frac{1}{N-1}\sqrt{\sum_{i=1}^{N}\left(\{T_{Mi} - T_{Pi}\} - \Delta T\right)^2} \leq 3\mathrm{K}$$

where N is the number of temperature points considered for correlation and ΔT is the mean temperature deviation.

Questo documento contiene informazioni di proprietà di CARLO GAVAZZI SPACE SpA. Tutti i diritti sono riservati.
All information contained in this document are property of CARLO GAVAZZI SPACE SpA. All right reserved.

11.TEST SUCCESS CRITERIA

Thermal tests shall be considered successful if the following criteria shall be satisfied:

- Test conditions according to specification requirements
- Absence of degradation or malfunction of UUT
- When $\Delta T/\Delta t \leq 3K/h$ is reached, temperature shall stabilized for at least 2 hours

12.TEST PROCEDURE VARIATION SHEET

In case that for any reason the test procedure has to be changed, the change shall be described in a Procedure Variation Sheet (PVS) as shown in the next page.

The PVS shall contain:

- Reference to the test procedure to be changed
- Reference to the relevant test, procedure page and paragraph
- Description of the change, possibly in the form was….is…..
- Reason for change
- Test Engineer, QA, Test conductor signatures and dates
- Customer signature and date (when required).

Each PVS shall be identified by a reference number provided in sequential order.

All the generated PVS shall be collected in a dedicated section of the Test Report.

Questo documento contiene informazioni di proprietà di CARLO GAVAZZI SPACE SpA. Tutti i diritti sono riservati.
All information contained in this document are property of CARLO GAVAZZI SPACE SpA. All right reserved.

PROCEDURE VARIATION SHEET ref. N°:

Test Procedure Ref.:	Page Revised:	Paragraph Revised:

Description of Change:

Reason for Change:

CONCURRENCE

Test Cond.	QA	System Eng.		Customer
Date	Date	Date		Date

Questo documento contiene informazioni di proprietà di CARLO GAVAZZI SPACE SpA. Tutti i diritti sono riservati.
All information contained in this document are property of CARLO GAVAZZI SPACE SpA. All right reserved.

13.CONCLUSIONS

13.1 INTERPRETATION OF RESULTS

The entire test has been carried out according to the test procedure.
TOF Test Article has been subjected to extremely hot and cold temperatures (measured on the relevant control point) as required by test procedures.
Temperature data obtained during the tests have been used for validation of the mathematical model of the subassembly. The correlation between tests and simulations has been reached , having a standard deviation of all temperatures differences less than 3°C.

In the following graphs are shown the temperatures measured during the test with TRP=-20°C.

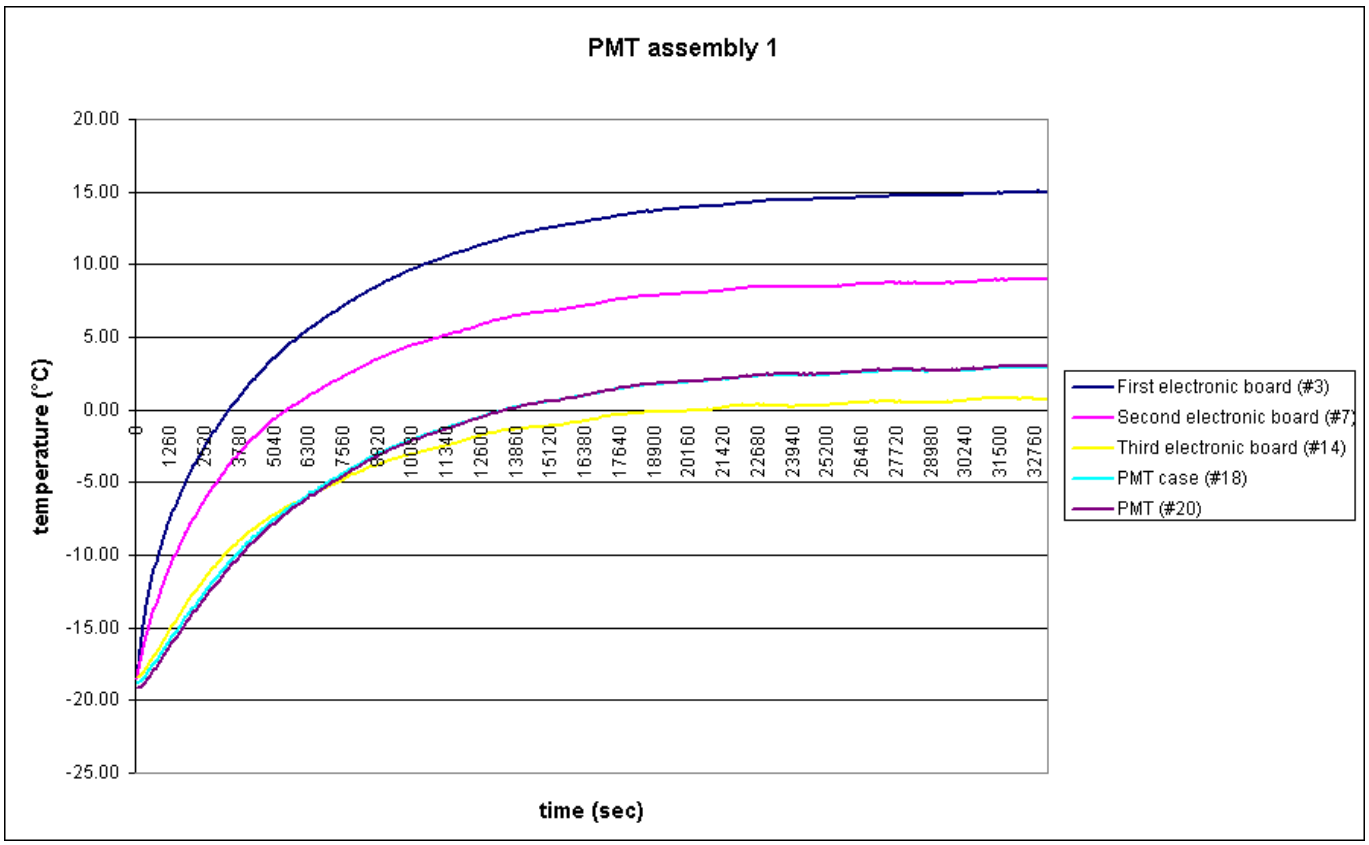

Fig. 13-1 PMT assembly 1: measured temperatures [TRP=-20°C]

Questo documento contiene informazioni di proprietà di CARLO GAVAZZI SPACE SpA. Tutti i diritti sono riservati.
All information contained in this document are property of CARLO GAVAZZI SPACE SpA. All right reserved.

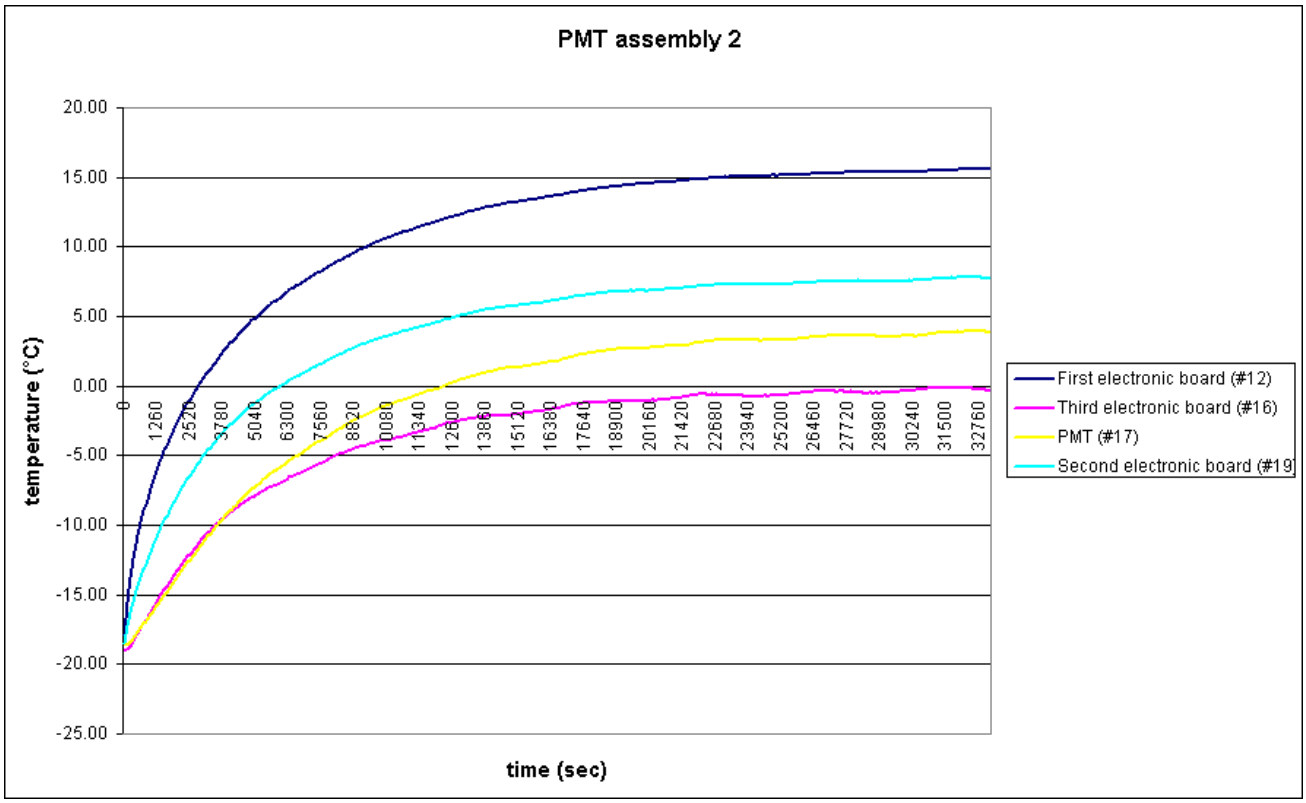

Fig. 13-2 PMT assembly 2: measured temperatures [TRP=-20°C]

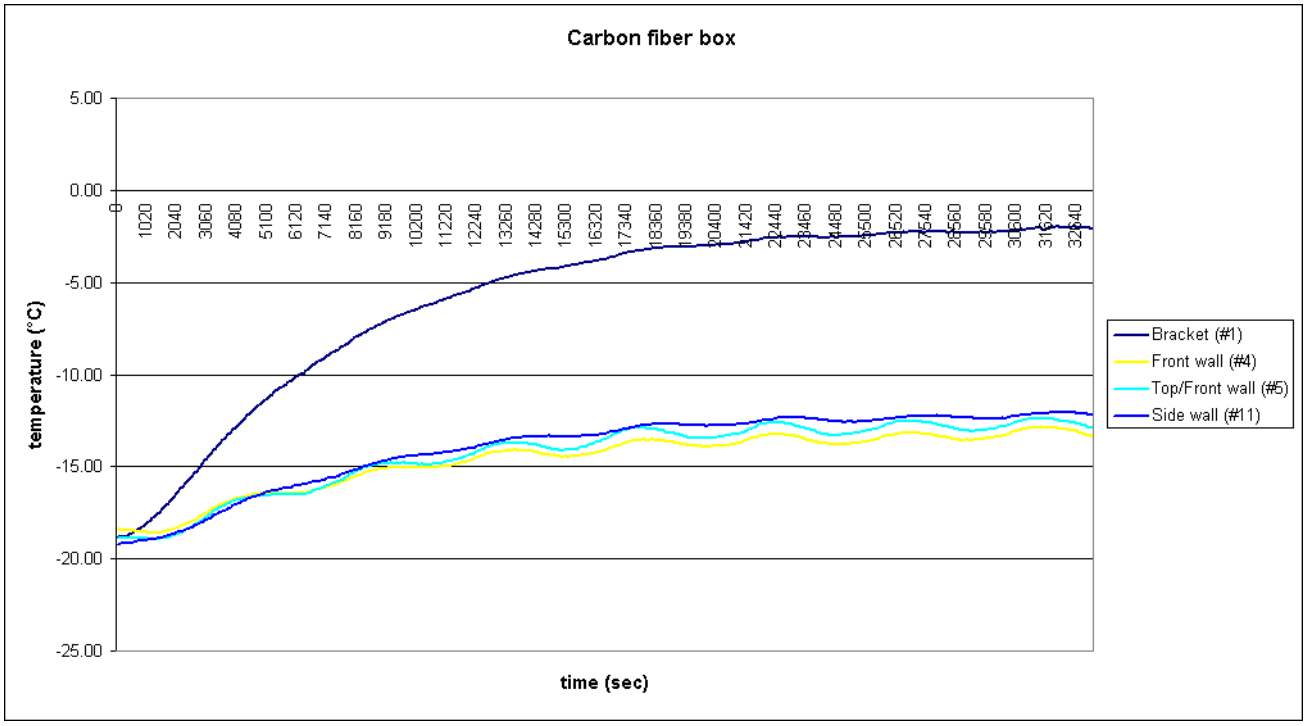

Fig. 13-3 Carbon fiber box: measured temperatures [TRP=-20°C]

Questo documento contiene informazioni di proprietà di CARLO GAVAZZI SPACE SpA. Tutti i diritti sono riservati.
All information contained in this document are property of CARLO GAVAZZI SPACE SpA. All right reserved.

In the following table there are the temperature values used for the validation: the results of Sinda Analysis and the temperatures obtained during the test, of which the first ones are a prediction.

Sensor ID		ITEM	Temperature Prediction T_S	Temperature measured T_T	DT ($T_T - T_S$)
3	PMT 1	First electronic board	13.0	14.8	1.8
7		Second electronic board	13.2	8.8	-4.4
14		Third electronic board	1.3	0.6	-0.7
18		PMT case	-1.2	2.7	3.9
20		PMT	2.0	2.8	0.8
12	PMT 2	First electronic board	12.9	15.4	2.5
19		Second electronic board	12.6	7.6	-5.0
16		Third electronic board	0.7	-0.3	-1.0
17		PMT case	-1.1	3.7	4.8
1	BOX	Bracket between PMTs and carbon box	-3.1	-2.2	1.1
2		Bottom wall	-14.5	-16.1	-1.6
4		Front wall	-13.9	-13.2	0.7
5		Top/Front wall	-13.7	-12.7	1.0
6		Top wall	-14.9	-14.0	0.9
9		Side wall	-13.0	-13.7	-0.7
11		Side wall	-14.5	-12.2	2.3

Tab. 13-1 Predicted and measured temperatures [TRP=-20°C]

The standard deviation calculated for the nodes in Tab. 7-1 is the following one:

$$s = \frac{1}{N-1}\sqrt{\sum_{i=1}^{N}\left(\{T_{Mi} - T_{Pi}\} - \Delta T\right)^2} = 0.7°C \leq 3°C$$

These results had been obtained after several iteration; the parameters modified simultaneously are shown in the following table:

Parameter	Initial value	Final value
Contact conductance between PMTs and bracket	100 W/m^{2}K	1000 W/m^{2}K
Internal box emissivity	0.05	0.2
Contact conductance between bracket and box	100 W/m^{2}K	300 W/m^{2}K

Questo documento contiene informazioni di proprietà di CARLO GAVAZZI SPACE SpA. Tutti i diritti sono riservati.
All information contained in this document are property of CARLO GAVAZZI SPACE SpA. All right reserved.

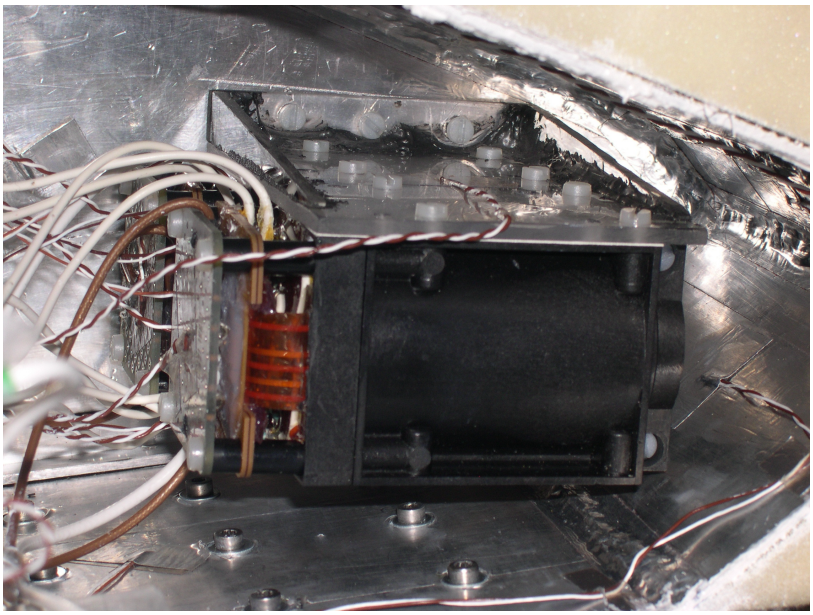

Fig. 13-4 PMTs and Plexiglas bracket inside the box

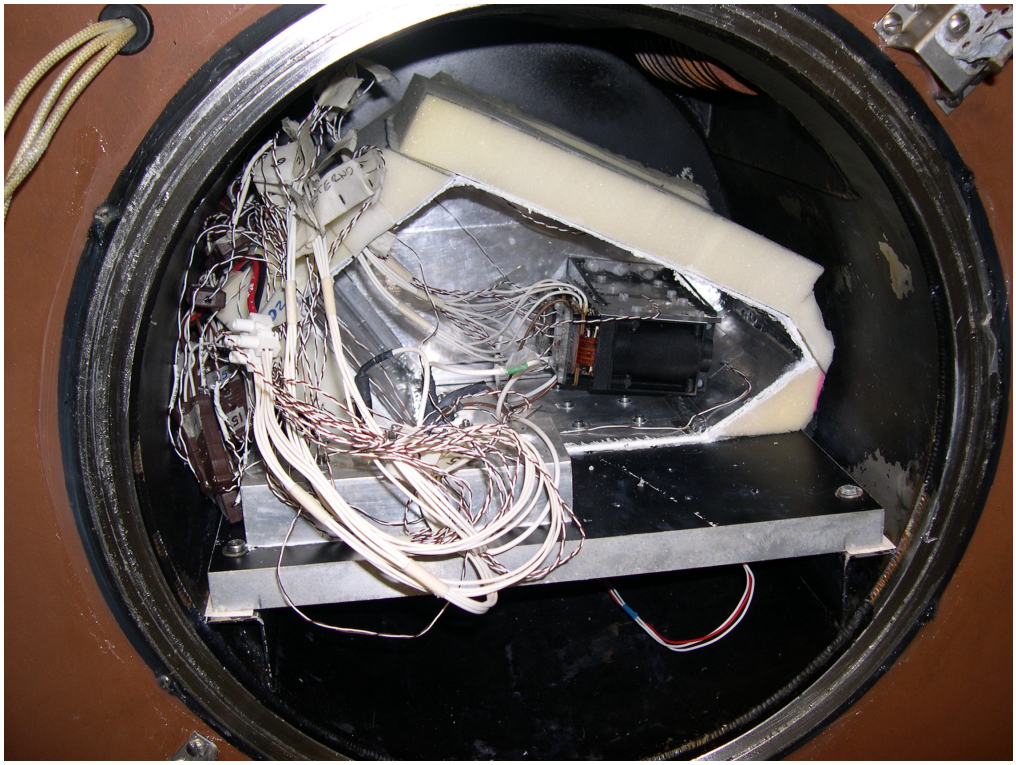

Fig. 13-5 Box in thermal vacuum chamber, partially covered with air foam

Questo documento contiene informazioni di proprietà di CARLO GAVAZZI SPACE SpA. Tutti i diritti sono riservati.
All information contained in this document are property of CARLO GAVAZZI SPACE SpA. All right reserved.

14. TEST DATA SHEETS

The step-by-step procedure sheets are provided in the following pages.

14.1 DATA SHEETS FILLING UP

The following fields of the data sheets:

- UUT DATA
- Measured value

shall be filled up during the test performances and shall be part of the Test Report together with photographs, sketches, etc. eventually useful to document the test execution/result.

Remarks field shall be used as a minimum to provide, where appropriate, reference to NCRs and PVS.

Test Report reference data shall be added in the relevant field.

Each data sheet (including the attachments) shall be certified by the Test Conductor signature and date.

Questo documento contiene informazioni di proprietà di CARLO GAVAZZI SPACE SpA. Tutti i diritti sono riservati.
All information contained in this document are property of CARLO GAVAZZI SPACE SpA. All right reserved.

UUT DATA :	**Model**	**Item**	**C.I.**	**S/N**

STEP n°	TEST SEQUENCE	EXPECTED VALUE	MEASURED VALUE	REMARKS
1.	**PRELIMINARY OPERATIONS**			
1.1.	Position and fix the unit at the chamber base plate	OK	OK	
1.2	Connect the electronic cables to the unit and verify harness	OK	OK	
1.3	Place the thermocouples sensor on the UUT according to the following figures 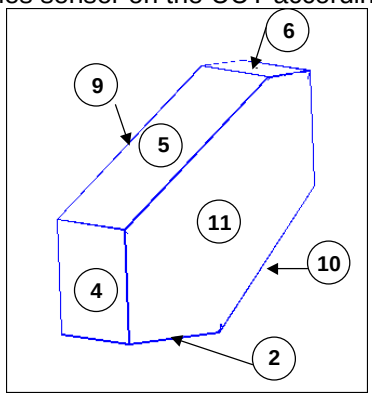	OK	OK	See thermocouples displacement on the following figures

DATE:	TEST CONDUCTOR	QA	CUSTOMER

Questo documento contiene informazioni di proprietà di CARLO GAVAZZI SPACE SpA. Tutti i diritti sono riservati.
All information contained in this document are property of CARLO GAVAZZI SPACE SpA. All right reserved.

UUT DATA :	Model	Item	C.I.	S/N

STEP n°	TEST SEQUENCE	EXPECTED VALUE	MEASURED VALUE	REMARKS

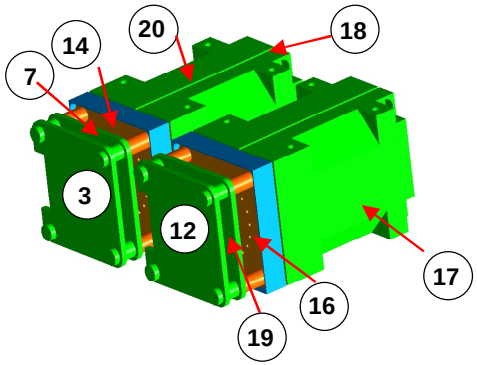

1) Bracket between PMTs and carbon box
2) Bottom wall of the carbon box
3) First electronic board (PMT assembly 1)
4) Front wall of the carbon box
5) Top/Front wall of the carbon box
6) Top wall of the carbon box
7) Second electronic board (PMT assembly 1)
9) Side wall of the carbon box
10) Rear/Bottom wall of the carbon box
11) Side wall of the carbon box
12) First electronic board (PMT assembly 2)
13) Slab for jack connection
14) Third electronic board (PMT assembly 1)
15) Slab for jack connection
16) Third electronic board (PMT assembly 2)
17) PMT 2

DATE:	TEST CONDUCTOR	QA	CUSTOMER

Questo documento contiene informazioni di proprietà di CARLO GAVAZZI SPACE SpA. Tutti i diritti sono riservati.
All information contained in this document are property of CARLO GAVAZZI SPACE SpA. All right reserved.

UUT DATA :	Model	Item	C.I.	S/N

STEP n°	TEST SEQUENCE	EXPECTED VALUE	MEASURED VALUE	REMARKS
	18) PMT case (PMT assembly 1) 19) Second electronic board (PMT assembly 2) 20) PMT 1			
1.4	Connect the Test Equipment to the cables outside the chamber	OK	OK	
1.5.	Protect the UUT with air foam	OK	OK	
1.6	Close the thermal chamber	OK	OK	
2	**TEST EXECUTION #1**			
2.1	Set the base plate temperature	T=-20°C	OK	
2.2	Wait for temperature stabilisation.	OK	OK	
2.3	Switch on the electrical power	OK	OK	
2.4	When $\Delta T/\Delta t \leq 3K/h$ is reached, temperature shall stabilized for at least 2 hours Record elapsed time and temperature.	OK	$\Delta T/\Delta t \leq 3K/h$ reached in 2 hr and 48 min	T_E= 5 hr and 25 min
2.6	Record base-plate temperature	T=-20°C	TRP= -19.1°C	
3	**TEST EXECUTION #2**			
3.1	Set the base plate temperature	T=+20°C	OK	
3.2	Wait for temperature stabilisation	OK	OK	
3.3	Switch on the electrical power	OK	OK	
3.4	When $\Delta T/\Delta t \leq 3K/h$ is reached, temperature shall stabilized for at least 2 hours Record elapsed time and temperature.	OK	$\Delta T/\Delta t \leq 3K/h$ reached in 3 hr and 2 min	T_E= 3 hr and 45 min
3.5	Record base-plate temperature	T=+20°C	TRP= 21.1°C	

DATE:	TEST CONDUCTOR	QA	CUSTOMER

Questo documento contiene informazioni di proprietà di CARLO GAVAZZI SPACE SpA. Tutti i diritti sono riservati.
All information contained in this document are property of CARLO GAVAZZI SPACE SpA. All right reserved.