Universal Slow Control Module

USCM V03/S3b

for AMS-II

Flight Version 1.5

May 2003

C. Camps[1] / V. Commichau[2] / K. Hangarter[3]

III. Physikalisches Institut

RWTH Aachen

Project supported by the Bundesministerium für Bildung und Forschung and the Deutsches Zentrum für Luft- und Raumfahrt (DLR), registered under 50009902 4.

[1] camps@physik.rwth-aachen.de
[2] commichau@physik.rwth-aachen.de
[3] hangarter@physik.rwth-aachen.de

Contents

A

AMS 2 Address Layout A 8
AMS 2 Address Layout B 8
AMS II A/B Memory Address Jumper Settings 8
Analogue Input 12
Analogue Input / Output 5
Analogue Output 12

C

CAN BUS 4
Circuits Diagrams & Layout 20

D

Dallas DS1820 Ports 5
Data read from a user 11
Data write to a user 11
Debug Options 7, 14
Definitions for data transfer to/from a user 11
Digital I/O Port Registers 10
Digital Input / Output 5
DS1820 Input & Output 14

F

Front Panel Connectors 15

L

Latch Up Protection 6

M

Memory Address Layo 8
Micro Controller 4

N

Non existent memory fault interrupt 7

P

Power Off/On switching 7
Power Supply 6

R

Reset and watchdog circuit 6

S

Serial Input / Output 4
Status Power FF 14
System Considerations 3

System Considerations

The Universal Slow Control Module (USCM-3[4]) for AMS II experiment is constructed on basis of the conclusions of the 3rd AMS02 Slow Control Meeting (SCM) 15.-16-01.2002 at Aachen, SCM at the TIM/CERN June 2001, May 2002 and the SCM Meeting 01.2002 at Aachen.
Based on a micro controller DS80C390[5], an upgraded version of the 8051, it should be possible to fulfil the requirements in terms of computing power, speed and power consumption. Two different memory address schemes are implemented in the USCM V03 version, the first one has a RAM window in the address range below 64k and a second one (flat memory address model) enables a 4 X 128kb memory address range for program ROM, data RAM, program & data RAM, program & data EEROM and I/O ports.
Part of this version are 16 LVDS in/outputs, 8 LVDS address outputs, 3 LVDS control signals, which may be used bit, byte or word wise to read or control external circuits.
32 ADC channels with a 0.0 to 4.096 VDC input range, 12 bit resolution and 16 DAC channels with 0.0 to 4.096 VDC output range are part of the module.
8 Ports for DALLAS DS1820 temperature sensor chains are provided.
The micro controller involves 2 CAN BUS ports with CAN 2B protocol and 2 serial ports with up to 38400 bd.
The power supply of all components is divided into 7 separated isles. This way the limits for an over current situation may be set very close to the normal operating conditions.
All I/O , including the power supply, may be done via two VME type 96 pin connectors. For special purposes the CAN BUS and serial I/O may be connected to a set of three front panel connectors. *For special test applications only a DC/DC converter is part of the module to convert 28VDC to 5VDC*. The estimated power consumption of the module is in the range of 0.20 to 0.4A@5VDC (depends on the board software activity). The power supply voltage must be in the range of 5V +/- 5%. The USCM modules will be installed in pairs, one powered (hot), the second not powered (cold) to get the redundancy required for all electronic components.

[4] This name may be changed at any time due to good arguments!
[5] http://www.dalsemi.com

Micro Controller

The main part of the module is a 8 bit micro controller DS80C390QNR[6] driven by a 16MHz oscillator. This type of micro controller is compatible to the 8051 instruction set, as used for the AMS I slow control modules, it may run in an extended mode with an 20bit address range to give more flexibility in terms of memory and I/O ports. Because of the reduced number of clock cycles (4 instead of 12) necessary per instruction an improvement of speed is given. Part of this controller are two CAN BUS port with the full 2.B implementation.
One watchdog function is part of the DS80C390 controller, a second is implemented in a power controller circuit, which has to be clocked from the system program every second. On a watch dog time out condition the latch up control is fired and the system is set to power off state for ca. 50ms. This way even bit flips will be detected and corrected by complete initialisation of the micro controller. An increased number of possible interrupt sources may be useful in the specific application. Two additional serial ports may be used during the software debugging phase for download and communication.

CAN BUS

The two CAN BUS ports (1Mbaud fixed) are fed to two I/O circuits of the PCAC250TE[7] type to fulfil the physical CAN BUS requirements (from 11 bit standard to 29 bit extended identifier). Two CAN BUS I/O connectors are provided, one on the front panel side and a second possibility is at the rear VME.J2 connector. To improve the CAN BUS performance one may disconnect the rear connector by special SMD jumpers.

Serial Input / Output

The actual software version supports only the port TTY0 up to a speed of 38400kb. The port signal are TTL levels and have to be converted off board to RS232 (MAX232CPE for example). Because of VCC present at the serial connector one may drive the TTL ↔ RS232 converter[8] by the board power.

[6] http://www.dalsemi.com
[7] hhtp://www.philips.com
[8] not part of the USCM

Digital Input / Output

16 LVDS I/O channels are part of the USCM V03. Additional 8 LVDS outputs are implemented to make a user address selection. The output port may be driven in bit, byte or word wise. Three control signals are foreseen to define data transfer direction, write/read, data strobe and the user acknowledge. On a power down or reboot situation at USCM side the control signals remain in their inactive state. The data and acknowledge signals are terminated at USCM level. All digital I/O is done via the VME.J1 connector at the rear.

* Note: BRI+ , BGI+, UAKN+ have to fed via 1K5 to GND, BRI-, BGI-, UAKN- via 1K5 to VCC at the backplane to give defined false levels during power off !

Analogue Input / Output

32 ADC channels with 12 bit resolution and a 0.0 to 4.096 input voltage range may be used for reading of analogue information. The inputs are protected up to a certain degree by diodes.
16 DAC channels with 12 bit resolution and a 0.0 to 4.096 V output span may be used to control external circuits. ADCs and DACs are controlled via serial protocol as defined by MAXIM[9] Integrated Products. All DAC& ADC I/O is done via the rear connectors.

Dallas DS1820 Ports

For temperature measurements eight DS1820 ports are provided. Every port may serve for up to 32 temperature sensors of the DS1820 type via a three wire link and the serial protocol defined by DALLAS. Every port is linked to the USCM power via a separate short circuit protection. In case of a permanent short circuit on the external cables a simple PNP transistor will brake, but the functionality of the board is still guaranteed. An additional latch up control for the temperature ports is provided. The threshold level have to be adjusted to the specific application.

[9] http://maxim-ic.com

One DS18S20Z is mounted on the USCM to monitor the board temperature near the MCU itself and may be used as board identifier. This Dallas sensor is linked to the MCU port pin P3.5 and has its own power fusing. All 8 temperature sensor chains may be accessed via the rear connectors and connector J6 near the front panel.

Latch Up Protection

Part of the module is a seven fold latch up protection. This way it was possible to lower the threshold for different supply isles to 110% level of the normal operation current. In case of a over current the power of whole the module is switched off for ca. 5µs. During data transfers to the user (external electronic boards) the current limit for the data and address drivers are set to a higher value, due to the larger supply current in case a LVDS driver is enabled. The mean response time for the latch up control circuits is 5µs. During power up reset (~ 200ms) the latch up control is disabled to ensure the charging of all capacitors without overcurrent fault set.

Reset and watchdog circuit

A power controller circuit MAX813L serves for a reset signal to MCU in case of powering the board and a supply voltage below the defined threshold (4.75VDC). A second function is the watchdog of this circuit. The MCU delivers by the program implemented a heart beat signal. In case this signal fails the watchdog circuit will fire the latch up protection and switches this way the board power off. On rebooting the complete initialisation of the board is done.

Power Supply

There are five different possibilities provided to power the USCM module. Three are accessible at the front panel, two times via the serial port connectors J1 and J2, the third via the CAN BUS connector J3. The power source used depends on the installation of the bridges R8, R9 or R10. The fourth possibility is a link from VME connector J1 Pin C25 via the bridge R89.
USCM3S3B Power requirements 0.20 to **0.4A@5VDC** +/- 5%.

Power Off/On switching

After power comes up a power switch is set to on state and the USCM board is powered. This should be the normal start condition for all USCM´s. Via a CAN BUS command every USCM may switch off their own power (“sucide”, P1.7) or may switch off the parallel working USCM (“murder”, P1.6). By another CAN BUS command the still powered USCM may switch the redundant counterpart (P1.0) back to the power. Any power switching via port pins has to be done in the sequence following: write to the port pin a zero, to set the port pin in the active state, then write a one to activate the action (suicide, cold USCM on or off). The power switch circuit may be disabled by installing jumper R147.
After power on of the USCM a control bit may be red from the application program to detect the first power on status. This bit may be cleared by program access and will not be set after a local power cycle (latch up controlled).

Debug Options

For software debugging one jumper is provided. The jumper J5 is connected to MCU port pin P1.1. Accordingly to the jumper position one may set this port pin to fixed logical level.

Non existent memory fault interrupt

In case of a memory bit flip it may be possible that the program code is modified in a way that non existent memory address are accessed. This will give an illegal or faulty service of user boards connected. A small decoder circuit will detect a non existent memory read or write cycle an generates a interrupt to the MCU. It will possible to fire the latch up control by software and to re-initialise the board this way.

Memory Address Layout

AMS 2 Address Layout A (with LOW RAM window)

Address	Memory Type	Access Type	Memory Type	Access Type
00000 – 07FFF	ROM Range: 32 kb	Program	RAM	Data Range: 32 kb
08000 – 0FFFF			RAM Range: 32 kb	Program & Data
10000 – 1FFFF	ROM Range: 64 kb	Program	RAM Range: 64 kb	Data
20000 – 3FFFF	EEROM Range: 128 kb	Program & Data		
40000 – 5FFFF			RAM Range: 128 kb	Program & Data
7F000 – 7FFFF	I/O Range : 4 kb	Data		

AMS 2 Address Layout B (default settings)

Address	Memory Type	Access Type	Memory Type	Access Type
00000 – 1FFFF	ROM Range: 128 kb	Program	RAM	Data Range: 128 kb
20000 – 3FFFF	EEROM Range: 128 kb	Program & Data		
40000 – 5FFFF			RAM Range: 128 kb	Program & Data
7F000 – 7FFFF	I/O Range : 4 kb	Data		

AMS II A/B Memory Address Jumper Settings

Resistor		AMS II-A	AMS II-B
R120		ON	OFF
R119		OFF	ON

Digital I/O Port Registers

Address 0X7F000 to 0X7F0003 LVDS Digital Output
Cleared on power on reset !

Address	Data	Signal Name
7F000	[D7::D0] / write	DOUT_7 to DOUT_0
7F001	[D7::D0] / write	DOUT_15 to DOUT_8
7F002	[D7::D0] / write	Address [A7::A0]
7F003	[D5::D0] / write	Control Write

7F003	Write	Control Write
	D0	0 = Read, 1 = Write (from/to User)
	D1	1 = Data Strobe to User
	D2	1 = Set Bus request
	D3	Not defined
	D4	Enable Data
	D5	Enable Address
	D7::D6	Not defined

Address 0X7F004 to 0X7F0007 LVDS Digital Input

Address	Data	Signal Name
7F004	[D7::D0] / read	DIN_7 to DIN_0
7F005	[D7::D0] / read	DIN_15 to DIN_8
7F006	[D7::D0] / read	No function
7F007	[D1::D0] / read	Control Read

7F007	Read	Control Read
	D0	1 = User acknowledge
	D1	1 = Bus request IN set
	D7::D2	Not defined

Definitions for data transfer to/from a user:

Data write to a user:

USCM : Check on Bus request IN not set
USCM : Set BUS request to ON → LVDS Control low Z
USCM : Enable Addresses (Addresses = Out byte 3)
USCM : Enables Data (bytes 1 & 2)
USCM : Set Read/Write to one, e.g. send data to user
USCM : Control Data Strobe high flags valid Data to User
USER : Stores data on data strobe leading edge
USCM : User Acknowledge flags User Write done
USER : On data strobe = 0, user clears Acknowledge
USCM : Set Bus request to OFF → LVDS Control floating

Data read from a user:

USCM : Check on Bus request IN not set
USCM : Set BUS request to ON
USCM : Enables Addresses (Out byte 3)
USCM : User Read/Write set to zero, flags read request to user
USCM : Control Data Strobe set to high, e.g. call for user data
USER : Enables on Read flag & data strobe driver circuits
USCM : User Acknowledge flags valid User data to the USCM
USER : On data strobe = 0, user clears Acknowledge
USCM : Set Bus request to OFF → LVDS Control floating

Remark:
There are no provisions taken to power both USCM´s (hot&cold) in a way that the LVDS bus may be used at the same time from both USCM´s!

Address 0X7F008 to 0X7F000A Analogue Output*

Address	Data	Function
7F008	D0 = 1 / write	Select DAC 0 (4 channels)
7F008	D1 = 1 / write	Select DAC 1 (4 channels)
7F008	D2 = 1 / write	Select DAC 2 (4 channels)
7F008	D3 = 1 / write	Select DAC 3 (4 channels)
7F009	D0 / write	DAC load clock 0/1
7F00A	D0 / write	DAC data input 0/1

* Note: For detailed information see MAX525 manual.

Address 0X7F00C to 0X7F000E Analogue Input*

Address	Data	Function
7F00C	D0 = 1 / write	Select ADC 0 (8 channels)
7F00C	D1 = 1 / write	Select ADC 1 (8 channels)
7F00C	D2 = 1 / write	Select ADC 2 (8 channels)
7F00C	D3 = 1 / write	Select ADC 3 (8 channels)
7F00D	D0 / write	ADC load clock 0/1
7F00E	D0 / write	ADC data input 0/1
7F00E	D0 / read	ADC data read 0 / 1

* Note: For detailed information see MAX186 manual

ADC Channels versus ADC-Chip channel sequence

ADC #	Channel	Analogue Input	Name
0	CH 0	7	AIN 7
0	CH 1	6	AIN 6
0	CH 2	5	AIN 5
0	CH 3	4	AIN 4
0	CH 4	3	AIN 3
0	CH 5	2	AIN 2
0	CH 6	1	AIN 1
0	CH 7	0	AIN 0
1	CH 0	7	AIN 15
1	CH 1	6	AIN 14
1	CH 2	5	AIN 13
1	CH 3	4	AIN 12
1	CH 4	3	AIN 11
1	CH 5	2	AIN 10
1	CH 6	1	AIN 9
1	CH 7	0	AIN 8
2	CH 0	7	AIN 23
2	CH 1	6	AIN 22
2	CH 2	5	AIN 21
2	CH 3	4	AIN 20
2	CH 4	3	AIN 19
2	CH 5	2	AIN 18
2	CH 6	1	AIN 17
2	CH 7	0	AIN 16
3	CH 0	7	AIN 31
3	CH 1	6	AIN 30
3	CH 2	5	AIN 29
3	CH 3	4	AIN 28
3	CH 4	3	AIN 27
3	CH 5	2	AIN 26
3	CH 6	1	AIN 25
3	CH 7	0	AIN 24

Address 0X7F010 to 0X7F0011 DS1820 Input & Output*

Address	Data	Function
7F010	[D7::D0] / write	Write DS data
7F011	D0 / write 0/1	all DS ports high Z = 0 low Z = 1
7F010	[D7::D0] / read	Read DS data

* Note: For detailed information see DS1820 manual

Debug Options

	Function	Settings
R151 (OFF/ON)	Latch Up Control	On / Off
J5	Port Pin 1.1 (T2EX)	On / Off

Power Options

R #	Function	Settings
146	DC DC converter	In = On / Out = Off
147	Board power switch	In = Off / Out = On
10	VCC from 1st serial port	In = On / Out = Off
9	VCC from 2nd serial port	In = On / Out = Off
8	VCC from CAN BUS	In = On / Out = Off
89	VCC from rear connector J1	In = On / Out = Off

Status Power FF

Address 0X7F014 Power Cycle Flip Flop

Address	Data	Function
7F014	Read [D0]	Status Power FF
		1 = external Power On

Clear Status Power FF

MCU Port Pin P3.2 write sequence 0, 1, 0

Front Panel Connectors

Serial I/O #1

Connector	Pin	Function
J1	1	GND
	2	2VCC*
TTY 1	3	TXD1
	4	RXD1
	5	Manual Reset
	6	GND

* Note: For 2nd serial power install R9, 0Ω SMD resistor!

Serial I/O #2

Connector	Pin	Function
J2	1	GND
	2	1VCC
TTY0	3	TXD0
	4	RXD0
	5	Manual Reset
	6	GND

* Note: For 1st serial power install R10, 0Ω SMD resistor!

CAN BUS I/O

Connector	Pin	Function
J3	1	CAN A-
	2	CAN A+
	3	CAN B-
	4	CAN B+
	5	GND
	6	GND
	7	3VCC
	8	3VCC
	9	GND
	10	GND

Connector	Pin	Function
J8[10]	1	GND
	2	GND

* Note: For CAN BUS power feed install R8, 0Ω SMD resistor!

[10] **To fix unsed pigtail cables**

Dallas Sensor Chains (via Front Panel)

Connector	Pin	Function
J6	1	GND
	2	DS_IO1
	3	DS_VCC1
	4	GND
	5	DS_IO2
	6	DS_VCC2
	7	GND
	8	DS_IO3
	9	DS_VCC3
	10	GND
	11	DS_IO4
	12	DS_VCC4
	13	GND
	14	DS_IO5
	15	DS_VCC5
	16	GND
	17	DS_IO6
	18	DS_VCC6
	19	GND
	20	DS_IO7
	21	DS_VCC7
	22	GND
	23	DS_IO8
	24	DS_VCC8

Connector	Pin	Function
J7[11]	1	GND
	2	GND
	3	GND
	4	GND
	5	GND
	6	GND
	7	GND
	8	GND
	9	GND
	10	GND

[11] **To fix unused pigtail cables**

VME.J1

Pin	Signal	Pin	Signal	Pin	Signal
A1	DIO_0+	B1	DIO_16+	C1	GND
A2	DIO_0-	B2	DIO_16-	C2	DS_IO1
A3	DIO_1+	B3	DIO_17+	C3	DS_VCC1
A4	DIO_1-	B4	DIO_17-	C4	GND
A5	DIO_2+	B5	DIO_18+	C5	DS_IO2
A6	DIO_2-	B6	DIO_18-	C6	DS_VCC2
A7	DIO_3+	B7	DIO_19+	C7	GND
A8	DIO_3-	B8	DIO_19-	C8	DS_IO3
A9	DIO_4+	B9	DIO_20+	C9	DS_VCC3
A10	DIO_4-	B10	DIO_20-	C10	GND
A11	DIO_5+	B11	DIO_21+	C11	DS_IO4
A12	DIO_5-	B12	DIO_21-	C12	DS_VCC4
A13	DIO_6+	B13	DIO_22+	C13	GND
A14	DIO_6-	B14	DIO_22-	C14	DS_IO5
A15	DIO_7+	B15	DIO_23+	C15	DS_VCC5
A16	DIO_7-	B16	DIO_23-	C16	GND
A17	DIO_8+	B17	URW+	C17	DS_IO6
A18	DIO_8-	B18	URW-	C18	DS_VCC6
A19	DIO_9+	B19	UST+	C19	GND
A20	DIO_9-	B20	UST-	C20	DS_IO7
A21	DIO_10+	B21	BRO+	C21	DS_VCC7
A22	DIO_10-	B22	BRO-	C22	GND
A23	DIO_11+	B23	BGO+	C23	DS_IO8
A24	DIO_11-	B24	BGO-	C24	DS_VCC8
A25	DIO_12+	B25	UAKN+	C25	4VCC*
A26	DIO_12-	B26	UAKN-	C26	GND
A27	DIO_13+	B27	BRI+	C27	GND
A28	DIO_13-	B28	BRI-	C28	-28V
A29	DIO_14+	B29	BGI+	C29	-28V
A30	DIO_14-	B30	BGI-	C30	+28V
A31	DIO_15+	B31	GND	C31	+28V
A32	DIO_15-	B32	GND	C32	CHASS_GND

* Note: For J1 power install R89, 0Ω SMD resistor!
* Note: BRI+ , BGI+, UAKN+ via 1K5 to GND, BRI-, BGI-, UAKN- via 1K5 to VCC at backplane to give defined false levels during power off !

VME.J2

Pin	Signal	Pin	Signal	Pin	Signal
A1	GND	B1	DAC 0	C1	AIN 0
A2	GND	B2	DAC 1	C2	AIN 1
A3	GND	B3	DAC 2	C3	AIN 2
A4	GND	B4	DAC 3	C4	AIN 3
A5	GND	B5	DAC 4	C5	AIN 4
A6	GND	B6	DAC 5	C6	AIN 5
A7	GND	B7	DAC 6	C7	AIN 6
A8	GND	B8	DAC 7	C8	AIN 7
A9	GND	B9	DAC 8	C9	AIN 8
A10	GND	B10	DAC 9	C10	AIN 9
A11	GND	B11	DAC 10	C11	AIN 10
A12	GND	B12	DAC 11	C12	AIN 11
A13	GND	B13	DAC 12	C13	AIN 12
A14	GND	B14	DAC 13	C14	AIN 13
A15	GND	B15	DAC 14	C15	AIN 14
A16	GND	B16	DAC 15	C16	AIN 15
A17	GND	B17	GND	C17	AIN 16
A18	GND	B18	GND	C18	AIN 17
A19	GND	B19	GND	C19	AIN 18
A20	GND	B20	GND	C20	AIN 19
A21	GND	B21	GND	C21	AIN 20
A22	GND	B22	GND	C22	AIN 21
A23	GND	B23	GND	C23	AIN 22
A24	GND	B24	TXD1	C24	AIN 23
A25	GND	B25	RXD1	C25	AIN 24
A26	GND	B26	TXD0	C26	AIN 25
A27	GND	B27	RXD0	C27	AIN 26
A28	GND	B28	Man. Res.	C28	AIN 27
A29	Out S_ON	B29	CAN A-	C29	AIN 28
A30	In Ext_On	B30	CAN A+	C30	AIN 29
A31	Out S_Off	B31	CAN B-	C31	AIN 30
A32	In Murder	B32	CAN B+	C32	AIN 31

* Note: For CAN BUS operation via VME.J2 install R94, R94, R111, R112, 0Ω SMD resistors!

USCM Port Pin´s

Port/Pin	MCU function	USCM300	Jumper	Remarks	Date
P1.0	T2	1 = switch slave USCM on **(Note)**		Pull down installed 10K**Ω** & Power Init	24-July 2001
P1.1	T2EX	Pull Down installed, not used	J5	0 = execute EEROM; 1 =Do Not	
P1.2	RXD1	TTY1 Input, not used		2nd Serial input	
P1.3	TXD1	TTY1 Output, not used		2nd Serial output	
P1.4	INT2 HIGH	Bus Request Interrupt		USCM / USCM data transfer option	
P1.5	INT3 LOW	Non Ex Mem. Access		Illegal Address Access	
P1.6	INT4 HIGH	1 = switch slave USCM off **(Note)**		Pull down installed 10K**Ω** & Power Init	24-July 2001
P1.7	INT5 LOW	1 = suicide, e.g. switch own power off **(Note)**		Pull down installed 10K**Ω** & Power Init	24-July 2001
P3.0	**RXD0**	**CTY Input**		1st Serial input	
P3.1	**TXD0**	**CTY Output**		1st Serial output	
P3.2	INT0 LOW	Reset Power FF 0 **è** 1 **è** 0		Pull down installed 10K**Ω** & Power Init	18-Feb. 2002
P3.3	INT1 LOW	0=80mA I-limit 1=120mA I-limit **(Note)**		80/120mA current limit for System Memory	09- Sept. 2001
P3.4	TIMER 0 In	Linked to external watch dog		Heart beat, T = 2ms	
P3.5	TIMER 1 In/ck out	Pull Up installed & local DS18S20Z		Board identifier and MCU temperature	
P4.0	PMCE 0	Free, not connected			
P4.1	PMCE 1	Free, not connected			
P4.2	PMCE 2	Free, not connected			
P4.3	PMCE 3	Free, not connected			
P5.4	PCE 0	Free, not connected			
P5.5	PCE 1	Free, not connected			
P5.6	PCE 2	Free, not connected			
P5.7	PCE 3	Free, not connected			

Note: The port pin must first be activated by a write “0” !

Circuits Diagrams & Layout, USCM3 Connector Board & USCM Power Supply with RS232/TTL Converter to be added.

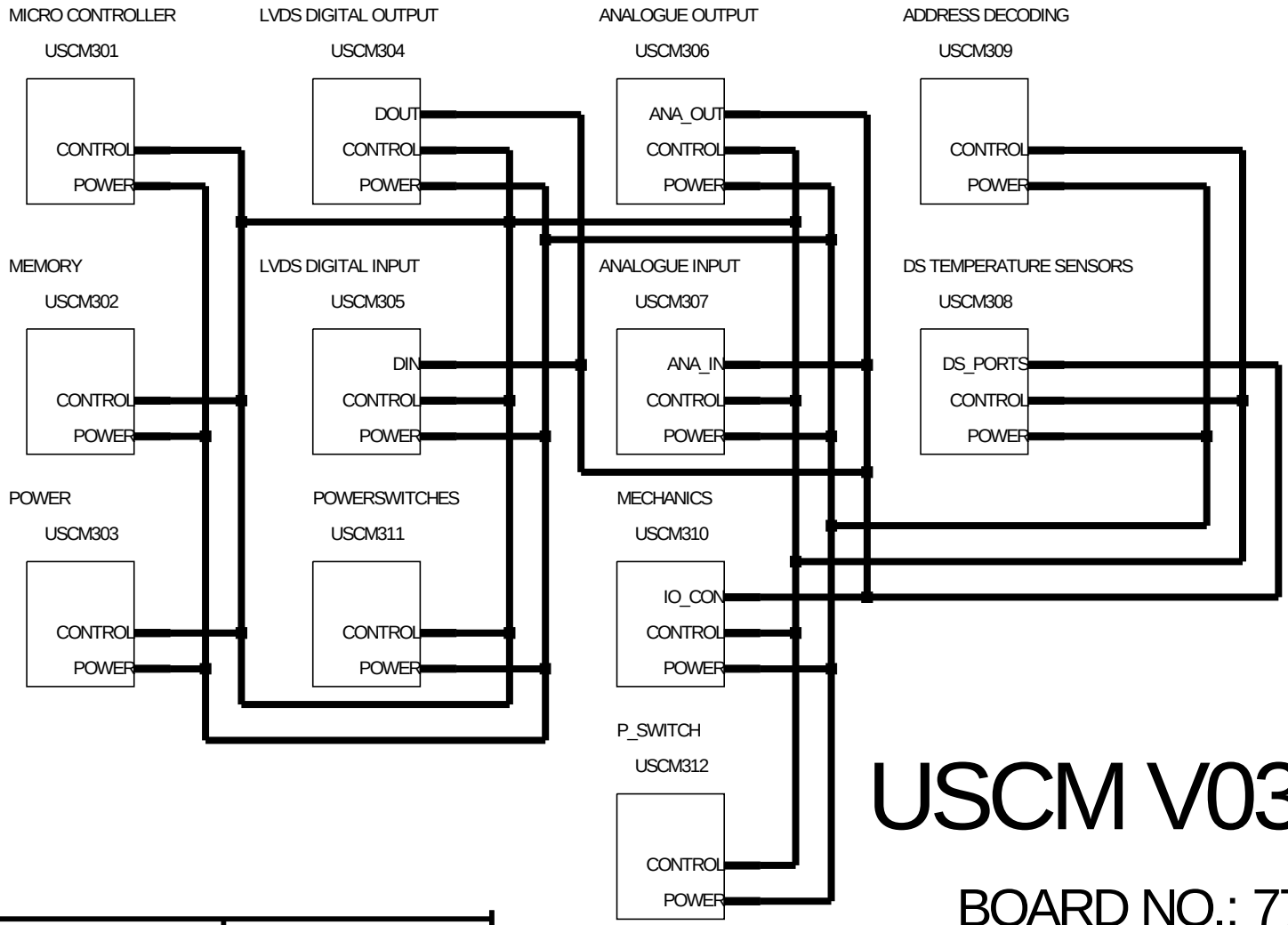

USCM V03S3B

BOARD NO.: 770

08.07.2002

COMMICHAU ACIII RWTH

REV: A	DATE: 08.07.2002	ENG: V.COMMICHAU
PROJECT:	AMS UNIVERSAL SLOW CONTROL MODULE V03	
COMPANY: III.PHYSIKALISCHES INSTITUT RWTH AACHEN ADDRESS: HUYSKENSWEG CITY D-52074 AACHEN COUNTRY: GERMANY	FILE:USCM300.SCH	
INITIAL 16.05.00	PAGE: 1	OF: 13

USCM MCU, TTY AND CAN BUS SECTION V03/S2

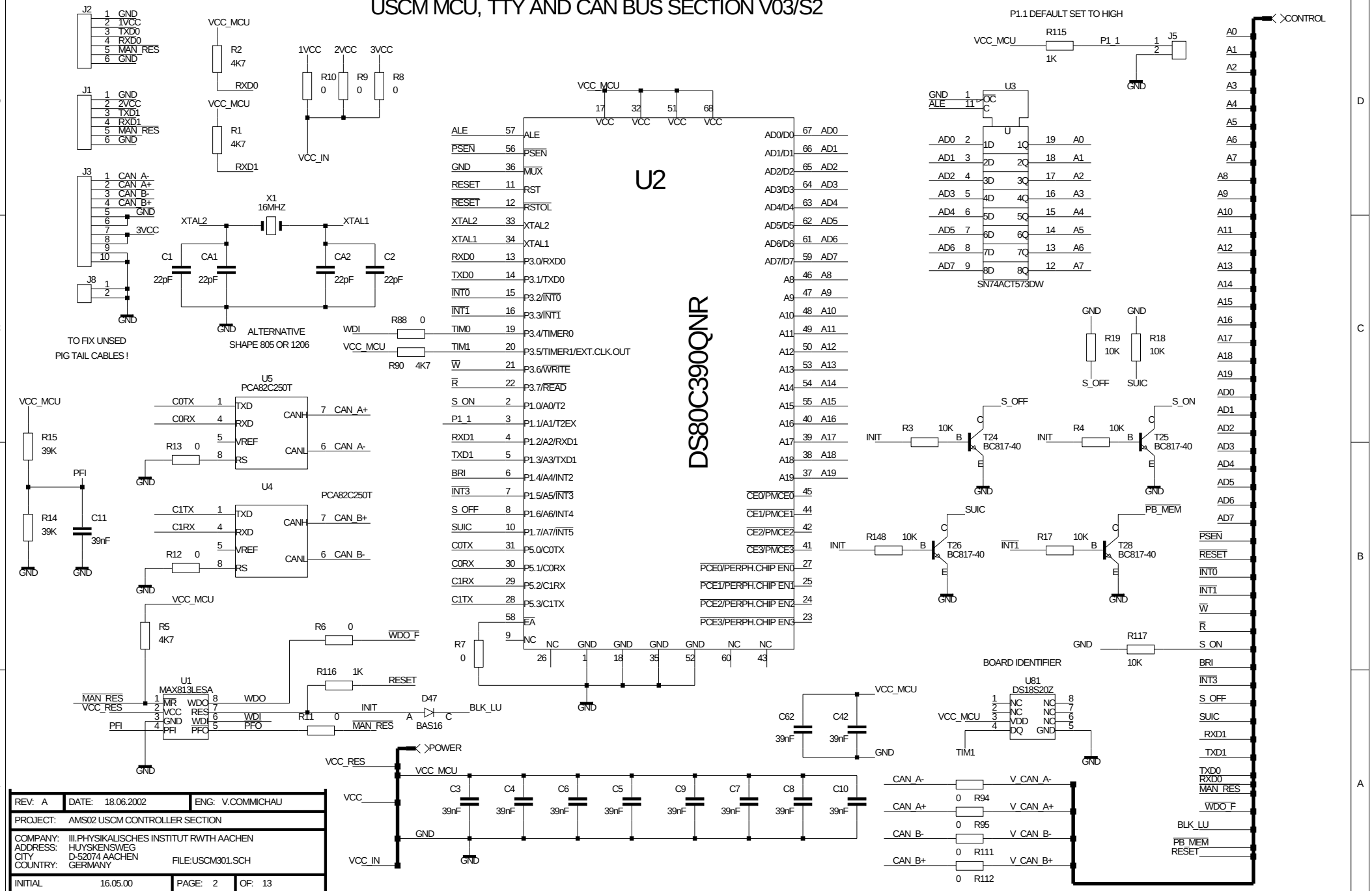

REV: A	DATE: 18.06.2002	ENG: V.COMMICHAU
PROJECT: AMS02 USCM CONTROLLER SECTION		
COMPANY: III.PHYSIKALISCHES INSTITUT RWTH AACHEN ADDRESS: HUYSKENSWEG CITY D-52074 AACHEN COUNTRY: GERMANY	FILE:USCM301.SCH	
INITIAL 16.05.00	PAGE: 2	OF: 13

USCM MEMORY SECTION V3

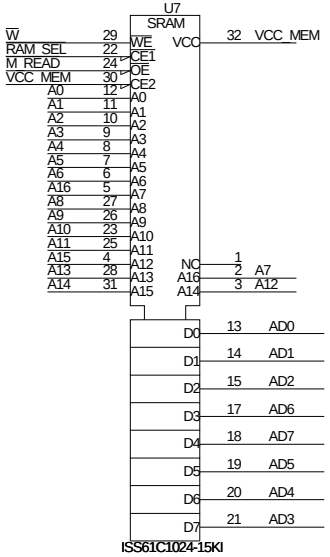

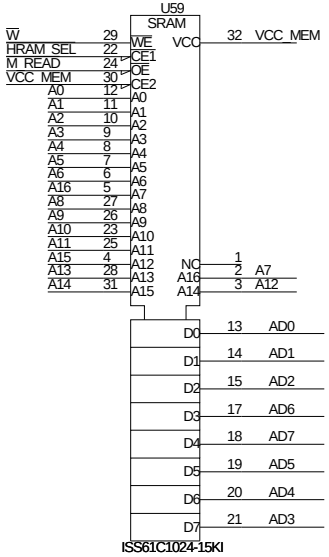

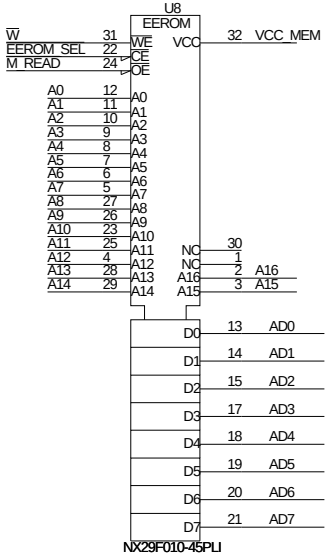

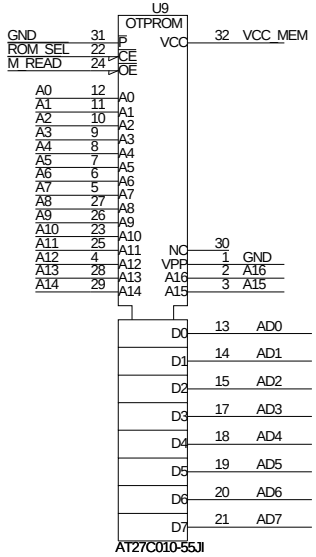

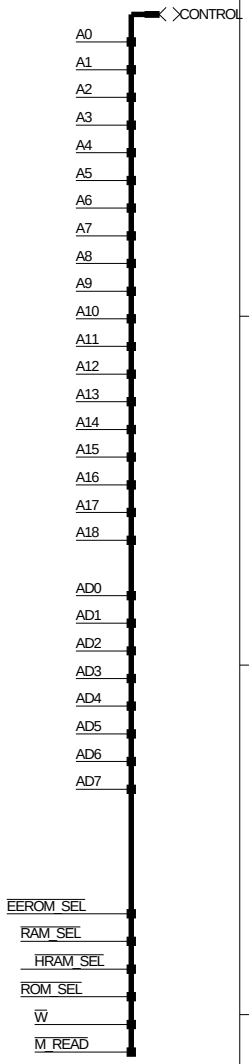

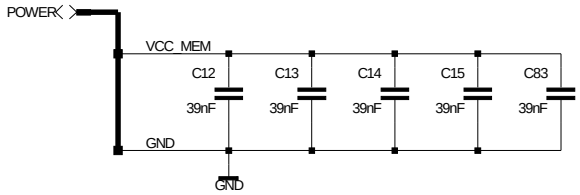

DEBUG EPROM, NOT INSTALLED IN FLIGHT VERSION

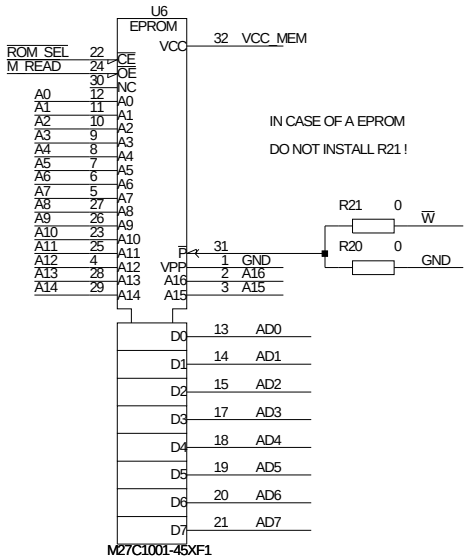

IN CASE OF A EPROM

DO NOT INSTALL R21 !

REV: A	DATE: 18.06.2002	ENG: V.COMMICHAU
PROJECT: AMS02 USCM SYSTEM MEMORY		
COMPANY: III.PHYSIKALISCHES INSTITUT RWTH AACHEN ADDRESS: HUYSKENSWEG CITY D-52074 AACHEN COUNTRY: GERMANY	FILE:USCM302.SCH	
INITIAL 23.06.00	PAGE: 3	OF: 13

LATCH UP PROTECTION CIRCUITS V3

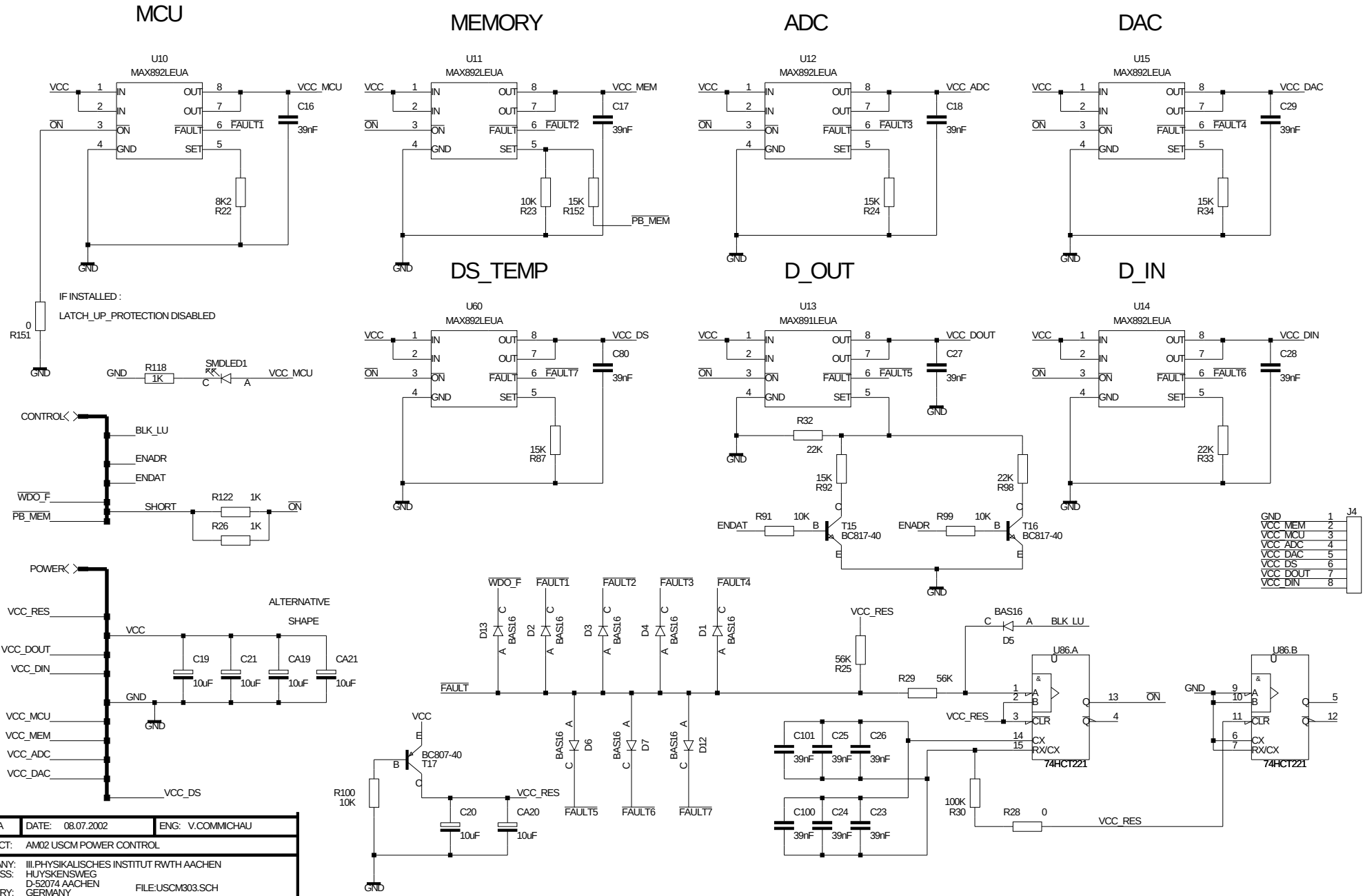

REV: A	DATE: 08.07.2002	ENG: V.COMMICHAU
PROJECT: AM02 USCM POWER CONTROL		
COMPANY: III.PHYSIKALISCHES INSTITUT RWTH AACHEN ADDRESS: HUYSKENSWEG CITY D-52074 AACHEN COUNTRY: GERMANY	FILE:USCM303.SCH	
INITIAL 16.05.00	PAGE: 4	OF: 13

USCM DIGITAL OUTPUT SECTION V3

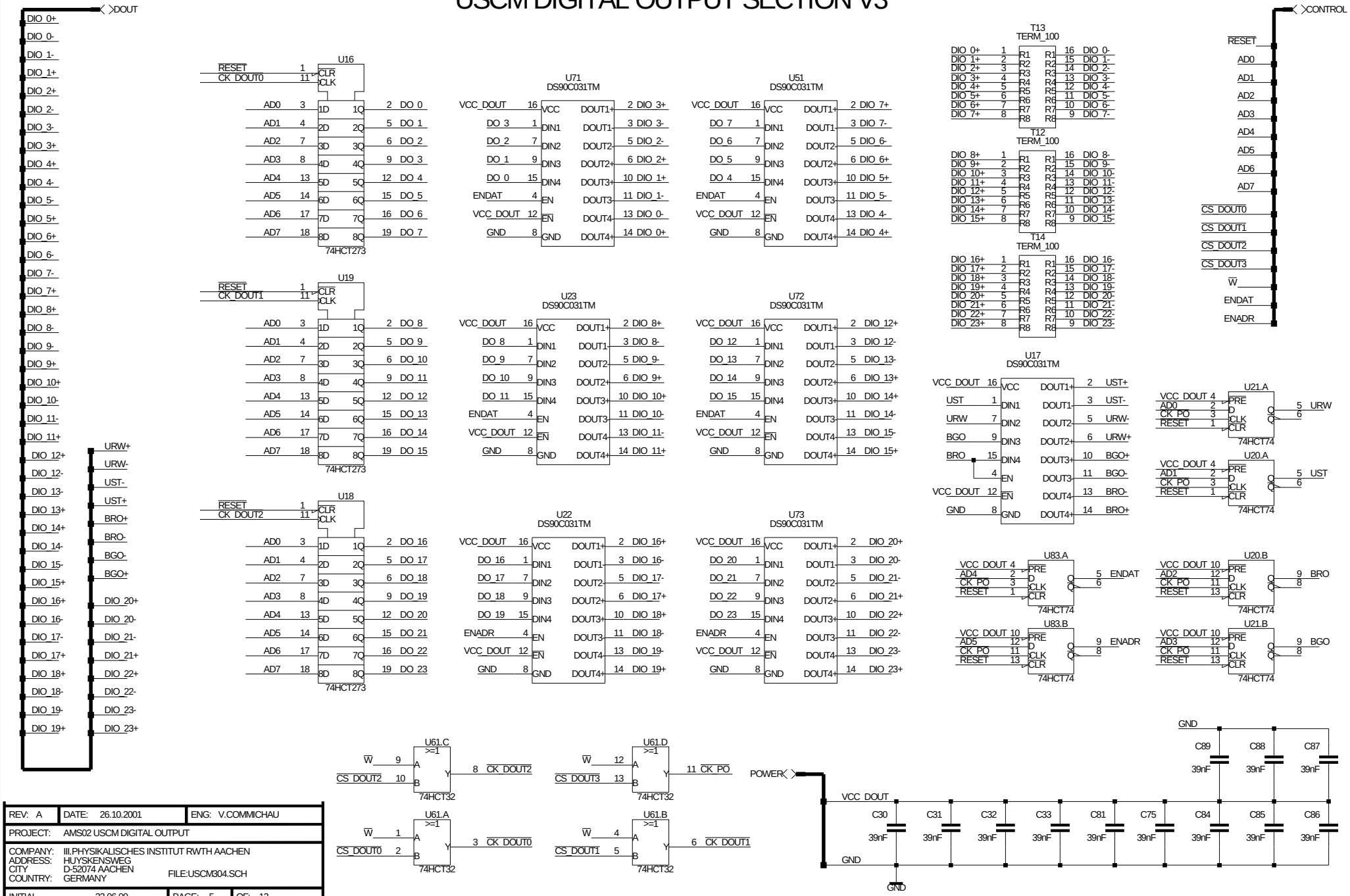

REV: A	DATE: 26.10.2001	ENG: V.COMMICHAU
PROJECT: AMS02 USCM DIGITAL OUTPUT		
COMPANY: III.PHYSIKALISCHES INSTITUT RWTH AACHEN ADDRESS: HUYSKENSWEG CITY D-52074 AACHEN COUNTRY: GERMANY	FILE:USCM304.SCH	
INITIAL 23.06.00	PAGE: 5	OF: 13

USCM DIGITAL INPUT SECTION V3

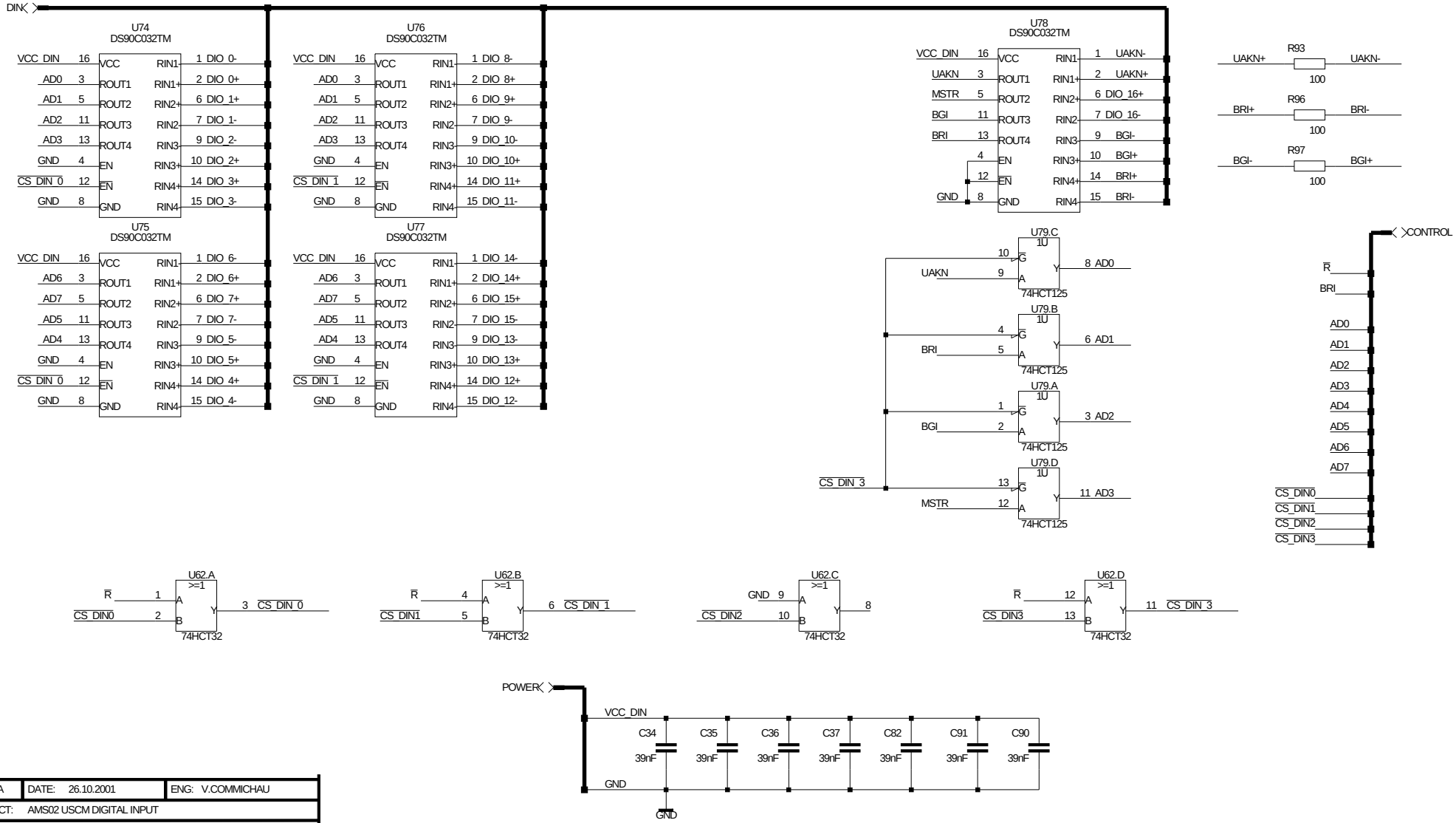

REV: A	DATE: 26.10.2001	ENG: V.COMMICHAU
PROJECT: AMS02 USCM DIGITAL INPUT		
COMPANY: III.PHYSIKALISCHES INSTITUT RWTH AACHEN ADDRESS: HUYSKENSWEG CITY D-52074 AACHEN COUNTRY: GERMANY	FILE:USCM305.SCH	
INITIAL 23.06.00	PAGE: 6	OF: 13

USCM DAC CHANNELS V3

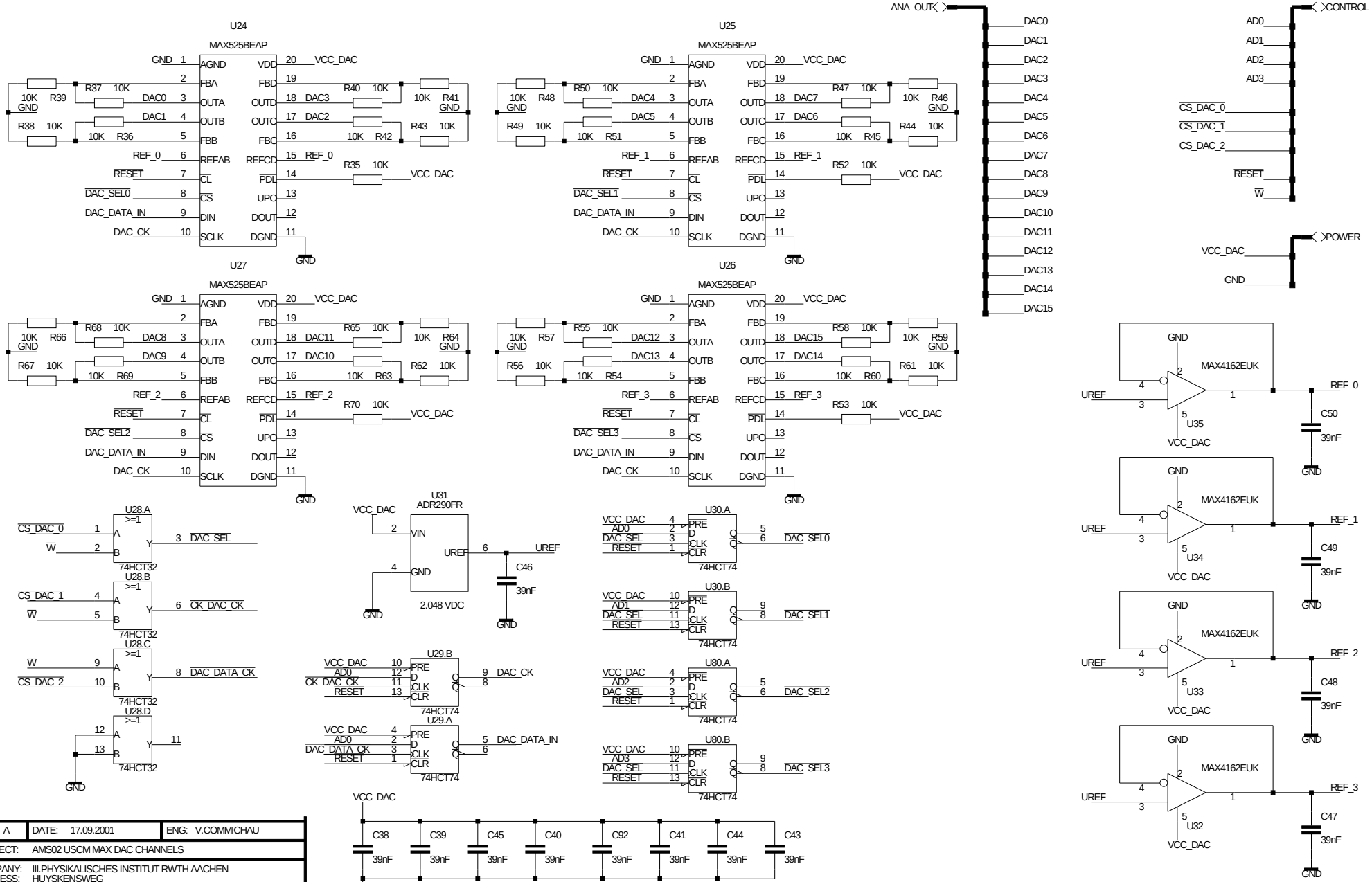

REV: A	DATE: 17.09.2001	ENG: V.COMMICHAU
PROJECT: AMS02 USCM MAX DAC CHANNELS		
COMPANY: III.PHYSIKALISCHES INSTITUT RWTH AACHEN ADDRESS: HUYSKENSWEG CITY D-52074 AACHEN COUNTRY: GERMANY	FILE:USCM306.SCH	
INITIAL 16.05.00	PAGE: 7	OF: 13

USCM ADC CHANNELS V3

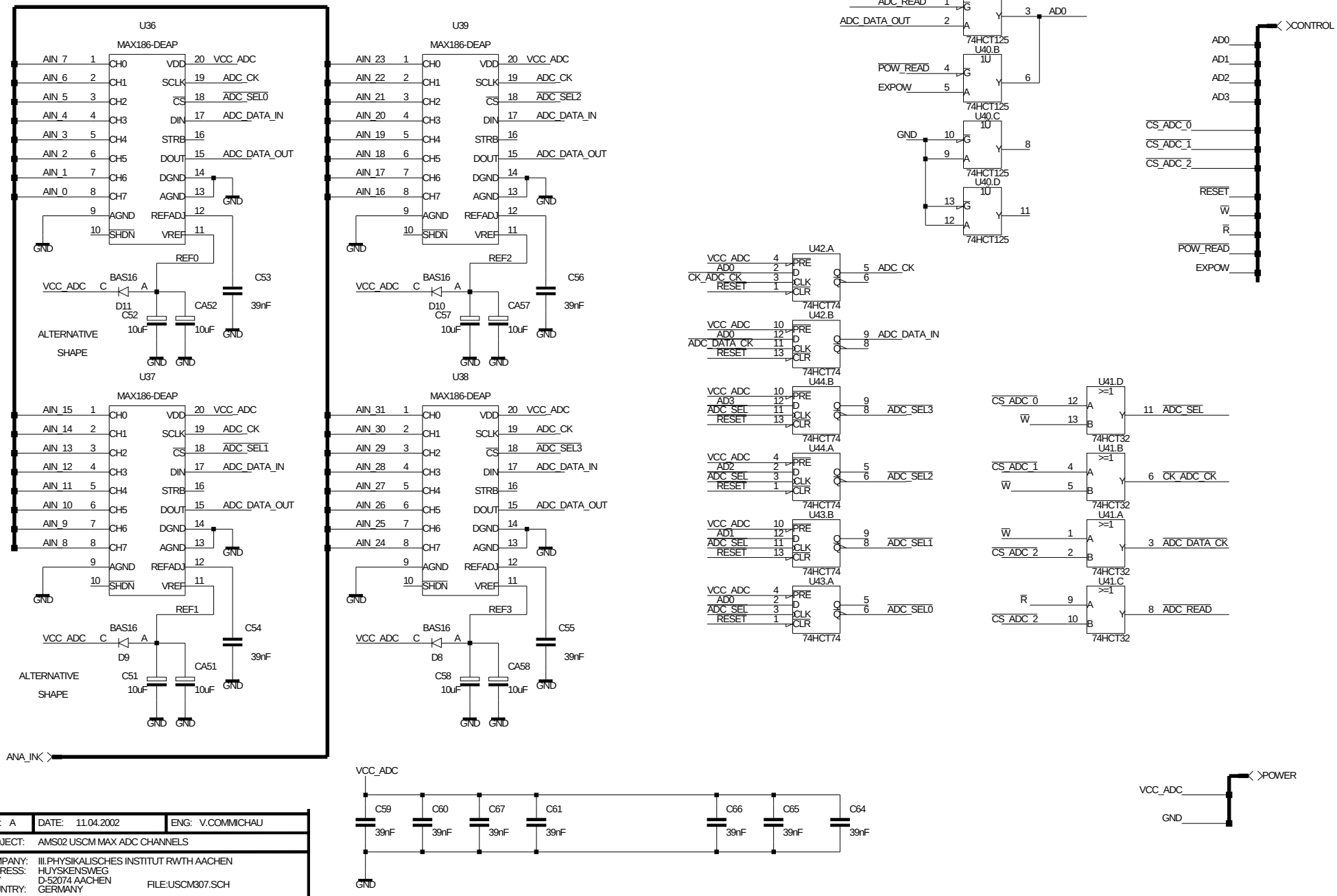

REV: A	DATE: 11.04.2002	ENG: V.COMMICHAU
PROJECT: AMS02 USCM MAX ADC CHANNELS		
COMPANY: III.PHYSIKALISCHES INSTITUT RWTH AACHEN ADDRESS: HUYSKENSWEG CITY D-52074 AACHEN COUNTRY: GERMANY	FILE:USCM307.SCH	
INITIAL 16.05.00	PAGE: 8	OF: 13

MECHANICS AND OPTIONAL VME CONNECTORS V3

DC-DC CONVERTER FUSE

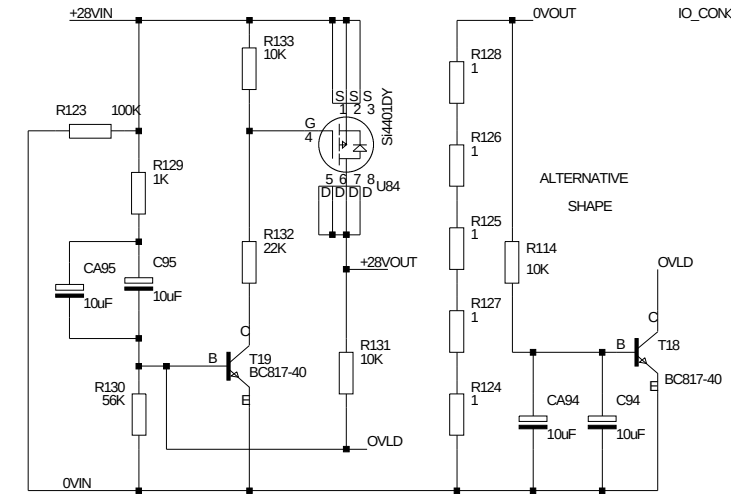

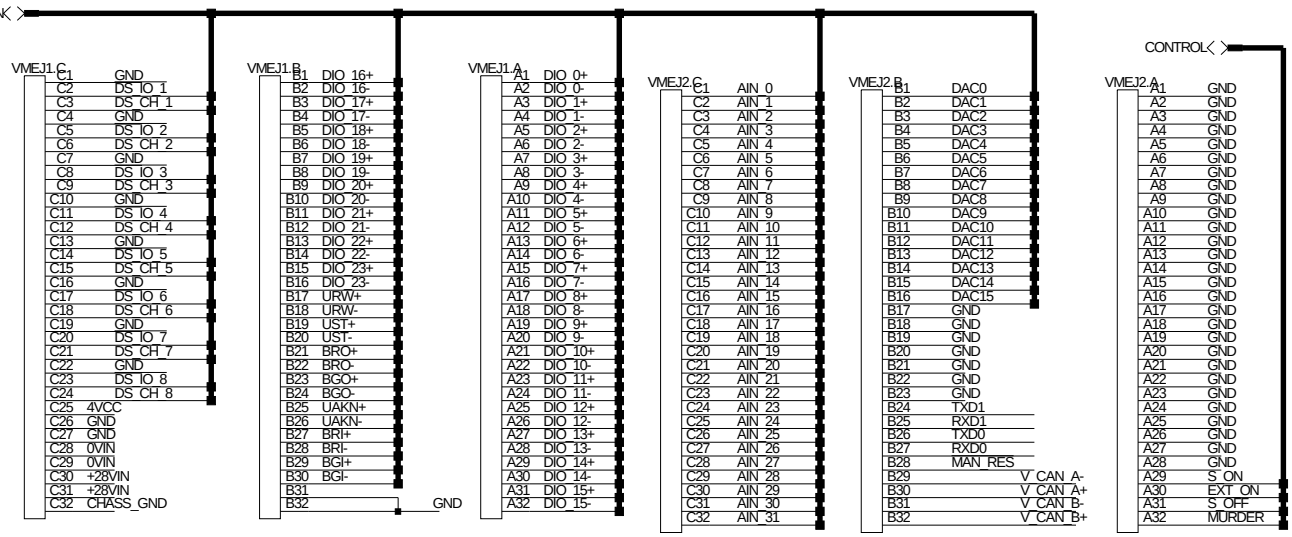

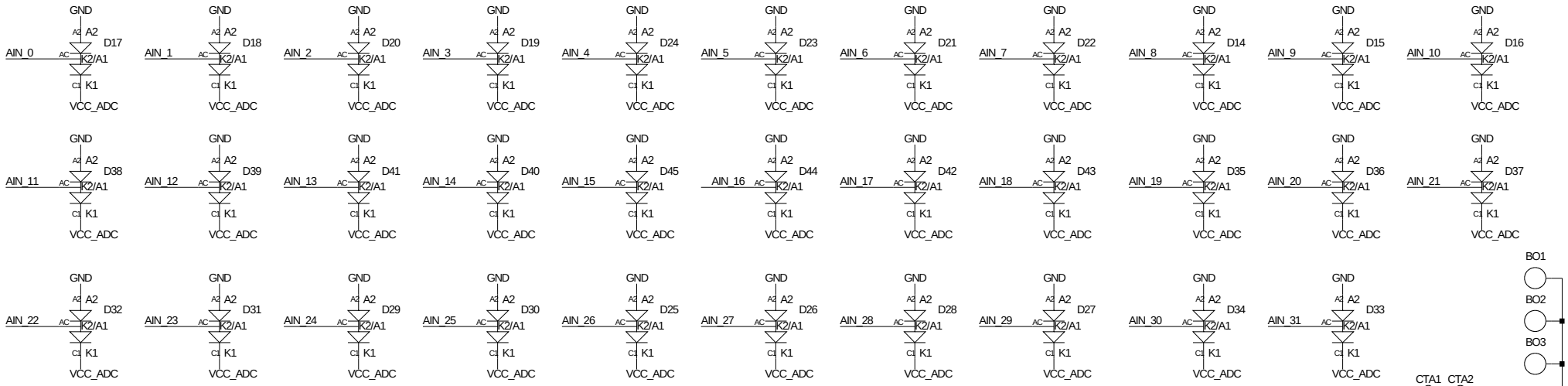

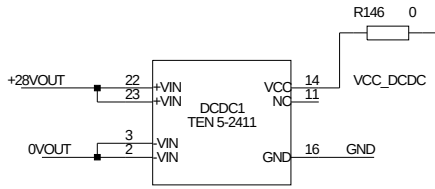

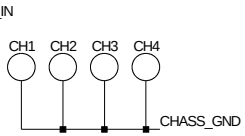

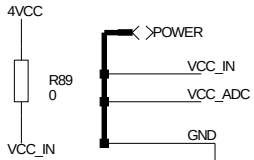

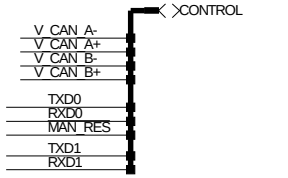

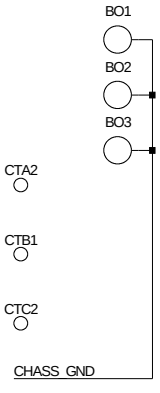

REV: A	DATE: 15.05.2002	ENG: V.COMMICHAU
PROJECT: AM02 USCM VME CONNECTOR		
COMPANY: III.PHYSIKALISCHES INSTITUT RWTH AACHEN ADDRESS: HUYSKENSWEG CITY D-52074 AACHEN COUNTRY: GERMANY	FILE:USCM310.SCH	
INITIAL 16.05.00	PAGE: 11	OF: 13

USCM DALLAS TEMPERATURE SENSOR PORTS V3

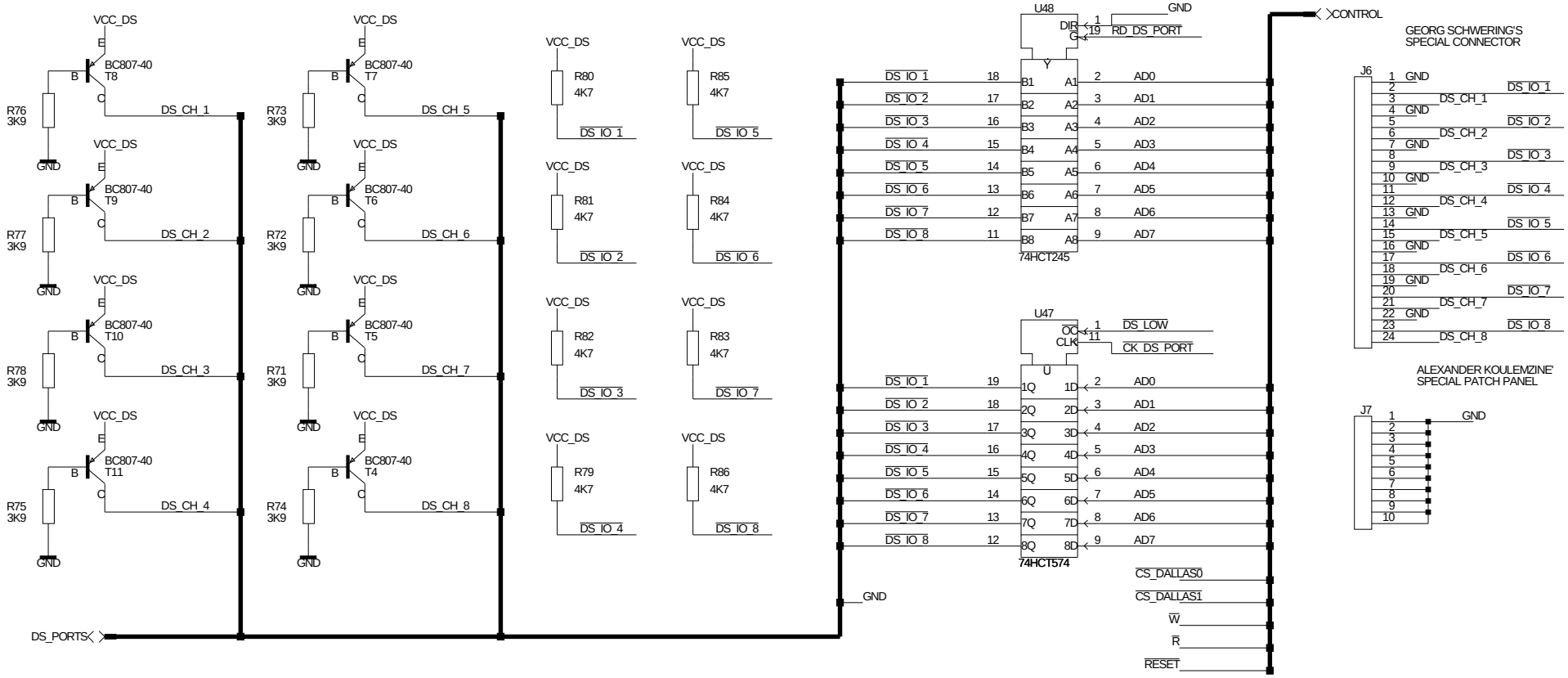

REV: A	DATE: 15.05.2001	ENG: V.COMMICHAU
PROJECT: AMS02 USCM DALLAS TEMPERATURE SENSORS		
COMPANY: III.PHYSIKALISCHES INSTITUT RWTH AACHEN ADDRESS: HUYSKENSWEG CITY D-52074 AACHEN COUNTRY: GERMANY	FILE:USCM308.SCH	
INITIAL 16.05.00	PAGE: 9	OF: 13

MCU ADDRESS DECODING V3

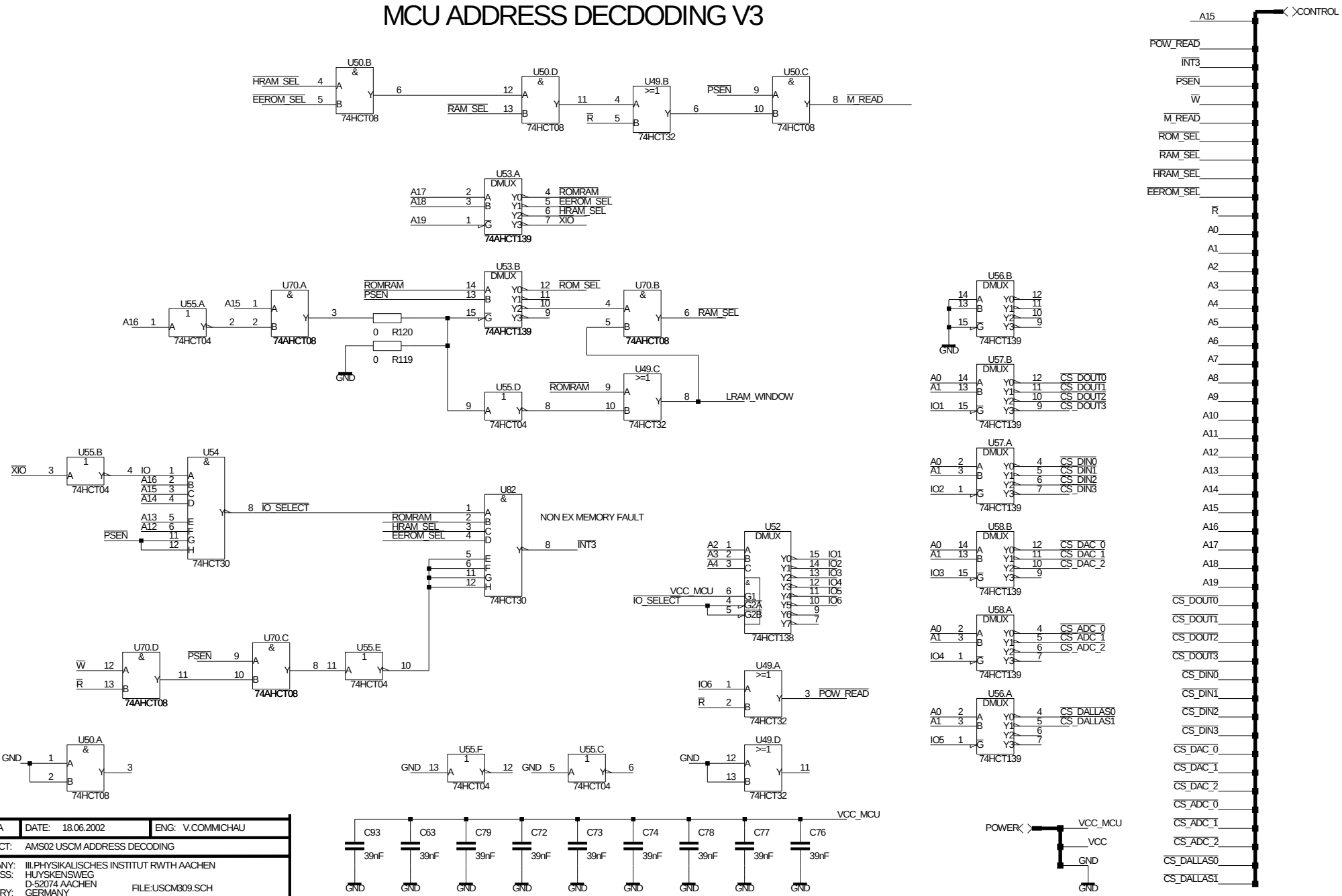

REV: A	DATE: 18.06.2002	ENG: V.COMMICHAU
PROJECT: AMS02 USCM ADDRESS DECODING		
COMPANY: III.PHYSIKALISCHES INSTITUT RWTH AACHEN ADDRESS: HUYSKENSWEG CITY D-52074 AACHEN COUNTRY: GERMANY	FILE:USCM309.SCH	
INITIAL 16.05.96	PAGE: 10	OF: 13

LATCH UP POWER CUTTERS V3

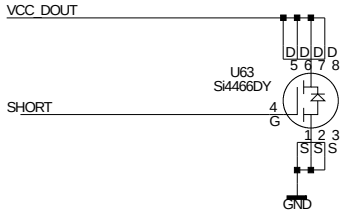

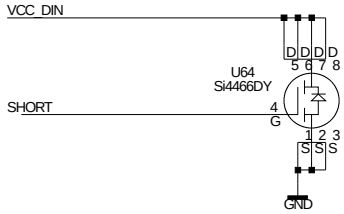

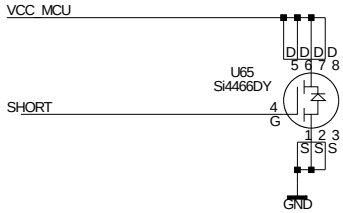

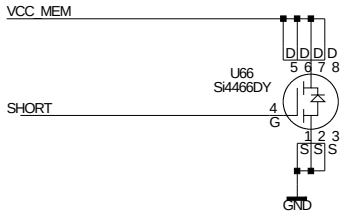

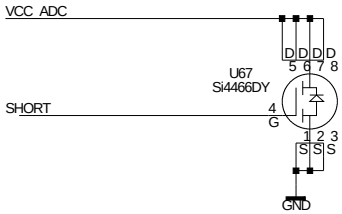

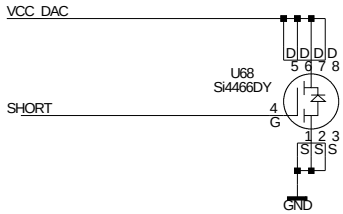

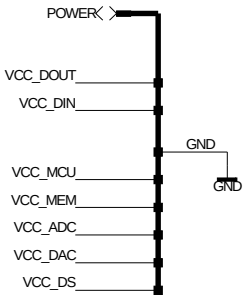

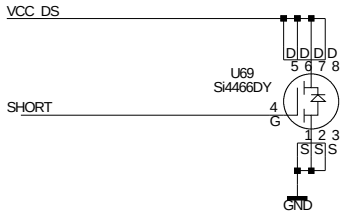

REV: A	DATE: 26.10.2001	ENG: V.COMMICHAU
PROJECT: AM02 USCM POWER SWITCHES		
COMPANY: III.PHYSIKALISCHES INSTITUT RWTH AACHEN ADDRESS: HUYSKENSWEG CITY D-52074 AACHEN COUNTRY: GERMANY	FILE:USCM311.SCH	
INITIAL 16.05.00	PAGE: 12	OF: 13

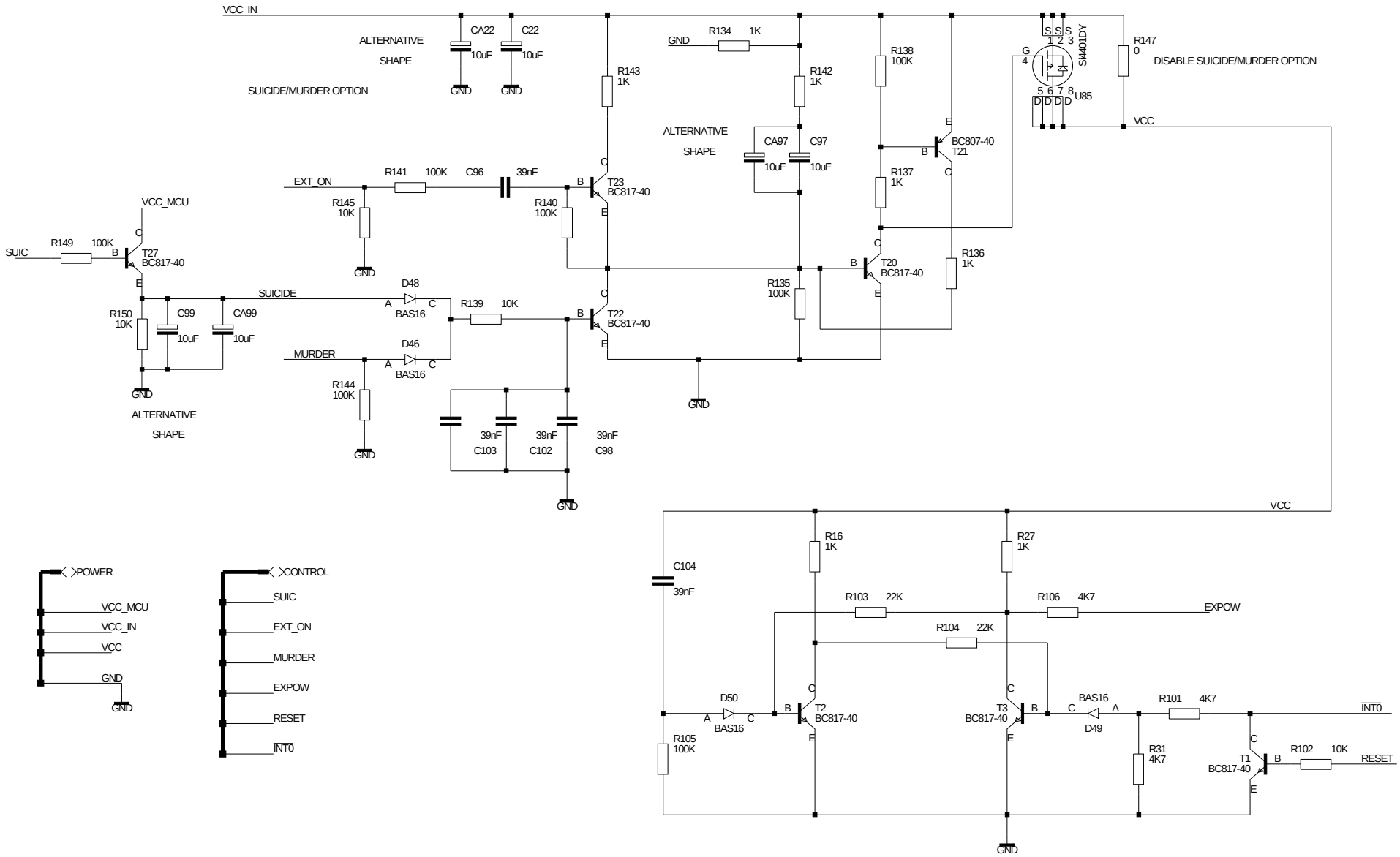

REV: A	DATE: 20.09.2002	ENG: V.COMMICHAU
PROJECT: AMS UNIVERSAL SLOW CONTROL MODULE V03		
COMPANY: III.PHYSIKALISCHES INSTITUT RWTH AACHEN ADDRESS: HUYSKENSWEG CITY D-52074 AACHEN COUNTRY: GERMANY	FILE:USCM212.SCH	
INITIAL 16.05.00	PAGE: 13	OF: 13

	Flight Version					
	USCM3S3b		**28.05.03**	**V.Commichau**		
	Component	**Value**	**Shape**	**Assembly Note**	**Source**	**Ref. No.**
	C1	22PF	R/C1206		deliv. from MIT	CDR32BP220BKWS
	C1a	22PF	805	alternativ shape		
	C2	22PF	R/C1206		deliv. from MIT	CDR32BP220BKWS
	C2a	22PF	805	alternativ shape		
	C3	39NF	R/C1206		deliv. from MIT	CDR32BX393AKWS
	C4	39NF	R/C1206_W		deliv. from MIT	CDR32BX393AKWS
	C5	39NF	R/C1206_W		deliv. from MIT	CDR32BX393AKWS
	C6	39NF	R/C1206_W		deliv. from MIT	CDR32BX393AKWS
	C7	39NF	R/C1206		deliv. from MIT	CDR32BX393AKWS
	C8	39NF	R/C1206		deliv. from MIT	CDR32BX393AKWS
	C9	39NF	R/C1206_W		deliv. from MIT	CDR32BX393AKWS
	C10	39NF	R/C1206		deliv. from MIT	CDR32BX393AKWS
	C11	39NF	R/C1206		deliv. from MIT	CDR32BX393AKWS
	C12	39NF	R/C1206_W		deliv. from MIT	CDR32BX393AKWS
	C13	39NF	R/C1206_W		deliv. from MIT	CDR32BX393AKWS
	C14	39NF	R/C1206_W		deliv. from MIT	CDR32BX393AKWS
	C15	39NF	R/C1206_W		deliv. from MIT	CDR32BX393AKWS
	C16	39NF	R/C1206		deliv. from MIT	CDR32BX393AKWS
	C17	39NF	R/C1206		deliv. from MIT	CDR32BX393AKWS
	C18	39NF	R/C1206		deliv. from MIT	CDR32BX393AKWS
	C19	10UF	TAN_MIL		deliv. from MIT	CRW11HH106KC
	C19a	10UF	TAN_B_W	alternativ shape		
	C20	10UF	TAN_MIL		deliv. from MIT	CRW11HH106KC
	C20a	10UF	TAN_B_W	alternativ shape		
	C21	10UF	TAN_MIL		deliv. from MIT	CRW11HH106KC
	C21a	10UF	TAN_B_W	alternativ shape		
	C22	10UF	TAN_MIL		deliv. from MIT	CRW11HH106KC
	C22a	10UF	TAN_B_W	alternativ shape		
	C23	39NF	R/C1206		deliv. from MIT	CDR32BX393AKWS
	C24	39NF	R/C1206		deliv. from MIT	CDR32BX393AKWS
	C25	39NF	R/C1206		deliv. from MIT	CDR32BX393AKWS
	C26	39NF	R/C1206		deliv. from MIT	CDR32BX393AKWS

	Component	Value	Shape	Assembly Note	Source	Ref. No.
	C27	39NF	R/C1206		deliv. from MIT	CDR32BX393AKWS
	C28	39NF	R/C1206		deliv. from MIT	CDR32BX393AKWS
	C29	39NF	R/C1206		deliv. from MIT	CDR32BX393AKWS
	C30	39NF	R/C1206		deliv. from MIT	CDR32BX393AKWS
	C31	39NF	R/C1206		deliv. from MIT	CDR32BX393AKWS
	C32	39NF	R/C1206		deliv. from MIT	CDR32BX393AKWS
	C33	39NF	R/C1206		deliv. from MIT	CDR32BX393AKWS
	C34	39NF	R/C1206		deliv. from MIT	CDR32BX393AKWS
	C35	39NF	R/C1206		deliv. from MIT	CDR32BX393AKWS
	C36	39NF	R/C1206		deliv. from MIT	CDR32BX393AKWS
	C37	39NF	R/C1206_W		deliv. from MIT	CDR32BX393AKWS
	C38	39NF	R/C1206		deliv. from MIT	CDR32BX393AKWS
	C39	39NF	R/C1206		deliv. from MIT	CDR32BX393AKWS
	C40	39NF	R/C1206		deliv. from MIT	CDR32BX393AKWS
	C41	39NF	R/C1206		deliv. from MIT	CDR32BX393AKWS
	C42	39NF	R/C1206		deliv. from MIT	CDR32BX393AKWS
	C43	39NF	R/C1206		deliv. from MIT	CDR32BX393AKWS
	C44	39NF	R/C1206		deliv. from MIT	CDR32BX393AKWS
	C45	39NF	R/C1206		deliv. from MIT	CDR32BX393AKWS
	C46	39NF	R/C1206		deliv. from MIT	CDR32BX393AKWS
	C47	39NF	R/C1206		deliv. from MIT	CDR32BX393AKWS
	C48	39NF	R/C1206		deliv. from MIT	CDR32BX393AKWS
	C49	39NF	R/C1206		deliv. from MIT	CDR32BX393AKWS
	C50	39NF	R/C1206		deliv. from MIT	CDR32BX393AKWS
	C51	10UF	TAN_MIL		deliv. from MIT	CRW11HH106KC
	C51a	10UF	TAN_B_W	alternativ shape		
	C52	10UF	TAN_MIL		deliv. from MIT	CRW11HH106KC
	C52a	10UF	TAN_B_W	alternativ shape		
	C53	39NF	R/C1206		deliv. from MIT	CDR32BX393AKWS
	C54	39NF	R/C1206		deliv. from MIT	CDR32BX393AKWS
	C55	39NF	R/C1206		deliv. from MIT	CDR32BX393AKWS
	C56	39NF	R/C1206		deliv. from MIT	CDR32BX393AKWS
	C57	10UF	TAN_MIL		deliv. from MIT	CRW11HH106KC
	C57a	10UF	TAN_B_W	alternativ shape		
	C58	10UF	TAN_MIL		deliv. from MIT	CRW11HH106KC
	C58a	10UF	TAN_B_W	alternativ shape		
	C59	39NF	R/C1206		deliv. from MIT	CDR32BX393AKWS

	Component	Value	Shape	Assembly Note	Source	Ref. No.
	C60	39NF	R/C1206		deliv. from MIT	CDR32BX393AKWS
	C61	39NF	R/C1206		deliv. from MIT	CDR32BX393AKWS
	C62	39NF	R/C1206		deliv. from MIT	CDR32BX393AKWS
	C63	39NF	R/C1206		deliv. from MIT	CDR32BX393AKWS
	C64	39NF	R/C1206		deliv. from MIT	CDR32BX393AKWS
	C65	39NF	R/C1206		deliv. from MIT	CDR32BX393AKWS
	C66	39NF	R/C1206		deliv. from MIT	CDR32BX393AKWS
	C67	39NF	R/C1206		deliv. from MIT	CDR32BX393AKWS
	C68	39NF	R/C1206		deliv. from MIT	CDR32BX393AKWS
	C69	39NF	R/C1206		deliv. from MIT	CDR32BX393AKWS
	C70	39NF	R/C1206		deliv. from MIT	CDR32BX393AKWS
	C71	39NF	R/C1206		deliv. from MIT	CDR32BX393AKWS
	C72	39NF	R/C1206		deliv. from MIT	CDR32BX393AKWS
	C73	39NF	R/C1206		deliv. from MIT	CDR32BX393AKWS
	C74	39NF	R/C1206		deliv. from MIT	CDR32BX393AKWS
	C75	39NF	R/C1206_W		deliv. from MIT	CDR32BX393AKWS
	C76	39NF	R/C1206		deliv. from MIT	CDR32BX393AKWS
	C77	39NF	R/C1206		deliv. from MIT	CDR32BX393AKWS
	C78	39NF	R/C1206		deliv. from MIT	CDR32BX393AKWS
	C79	39NF	R/C1206		deliv. from MIT	CDR32BX393AKWS
	C80	39NF	R/C1206		deliv. from MIT	CDR32BX393AKWS
	C81	39NF	R/C1206_W		deliv. from MIT	CDR32BX393AKWS
	C82	39NF	R/C1206_W		deliv. from MIT	CDR32BX393AKWS
	C83	39NF	R/C1206_W		deliv. from MIT	CDR32BX393AKWS
	C84	39NF	R/C1206		deliv. from MIT	CDR32BX393AKWS
	C85	39NF	R/C1206		deliv. from MIT	CDR32BX393AKWS
	C86	39NF	R/C1206		deliv. from MIT	CDR32BX393AKWS
	C87	39NF	R/C1206_W		deliv. from MIT	CDR32BX393AKWS
	C88	39NF	R/C1206_W		deliv. from MIT	CDR32BX393AKWS
	C89	39NF	R/C1206_W		deliv. from MIT	CDR32BX393AKWS
	C90	39NF	R/C1206_W		deliv. from MIT	CDR32BX393AKWS
	C91	39NF	R/C1206_W		deliv. from MIT	CDR32BX393AKWS
	C92	39NF	R/C1206		deliv. from MIT	CDR32BX393AKWS

	Component	Value	Shape	Assembly Note	Source	Ref. No.
	C93	39NF	R/C1206		deliv. from MIT	CDR32BX393AKWS
	C94	10UF	TAN_MIL	**not installed**		DC-DC Fuse
	C94a	10UF	TAN_B_W	alternativ shape		DC-DC Fuse
	C95	10UF	TAN_MIL	**not installed**		DC-DC Fuse
	C95a	10UF	TAN_B_W	alternativ shape		DC-DC Fuse
	C96	39NF	R/C1206		deliv. from MIT	CDR32BX393AKWS
	C97	10UF	TAN_MIL		deliv. from MIT	CRW11HH106KC
	C97a	10UF	TAN_B_W	alternativ shape		
	C98	39NF	R/C1206		deliv. from MIT	CDR32BX393AKWS
	C99	10UF	TAN_MIL		deliv. from MIT	CRW11HH106KC
	C99a	10UF	TAN_B_W	alternativ shape		
	C100	39NF	R/C1206		deliv. from MIT	CDR32BX393AKWS
	C101	39NF	R/C1206		deliv. from MIT	CDR32BX393AKWS
	C102	39NF	R/C1206		deliv. from MIT	CDR32BX393AKWS
	C103	39NF	R/C1206		deliv. from MIT	CDR32BX393AKWS
	C104	39NF	R/C1206		deliv. from MIT	CDR32BX393AKWS
	D1	BAS16	$BAS16		deliv. ACIII	SMD, Industrial Temperature Range
	D2	BAS16	$BAS16		deliv. ACIII	SMD, Industrial Temperature Range
	D3	BAS16	$BAS16		deliv. ACIII	SMD, Industrial Temperature Range
	D4	BAS16	$BAS16		deliv. ACIII	SMD, Industrial Temperature Range
	D5	BAS16	$BAS16		deliv. ACIII	SMD, Industrial Temperature Range
	D6	BAS16	$BAS16		deliv. ACIII	SMD, Industrial Temperature Range
	D7	BAS16	$BAS16		deliv. ACIII	SMD, Industrial Temperature Range
	D8	BAS16	$BAS16		deliv. ACIII	SMD, Industrial Temperature Range
	D9	BAS16	$BAS16		deliv. ACIII	SMD, Industrial Temperature Range
	D10	BAS16	$BAS16		deliv. ACIII	SMD, Industrial Temperature Range
	D11	BAS16	$BAS16		deliv. ACIII	SMD, Industrial Temperature Range
	D12	BAS16	$BAS16		deliv. ACIII	SMD, Industrial Temperature Range
	D13	BAS16	$BAS16		deliv. ACIII	SMD, Industrial Temperature Range
	D14	BAV99	$BAV99		deliv. ACIII	SMD, Industrial Temperature Range
	D15	BAV99	$BAV99		deliv. ACIII	SMD, Industrial Temperature Range
	D16	BAV99	$BAV99		deliv. ACIII	SMD, Industrial Temperature Range
	D17	BAV99	$BAV99		deliv. ACIII	SMD, Industrial Temperature Range
	D18	BAV99	$BAV99		deliv. ACIII	SMD, Industrial Temperature Range
	D19	BAV99	$BAV99		deliv. ACIII	SMD, Industrial Temperature Range
	D20	BAV99	$BAV99		deliv. ACIII	SMD, Industrial Temperature Range
	D21	BAV99	$BAV99		deliv. ACIII	SMD, Industrial Temperature Range

	Component	Value	Shape	Assembly Note	Source	Ref. No.
	D22	BAV99	$BAV99		deliv. ACIII	SMD, Industrial Temperature Range
	D23	BAV99	$BAV99		deliv. ACIII	SMD, Industrial Temperature Range
	D24	BAV99	$BAV99		deliv. ACIII	SMD, Industrial Temperature Range
	D25	BAV99	$BAV99		deliv. ACIII	SMD, Industrial Temperature Range
	D26	BAV99	$BAV99		deliv. ACIII	SMD, Industrial Temperature Range
	D27	BAV99	$BAV99		deliv. ACIII	SMD, Industrial Temperature Range
	D28	BAV99	$BAV99		deliv. ACIII	SMD, Industrial Temperature Range
	D29	BAV99	$BAV99		deliv. ACIII	SMD, Industrial Temperature Range
	D30	BAV99	$BAV99		deliv. ACIII	SMD, Industrial Temperature Range
	D31	BAV99	$BAV99		deliv. ACIII	SMD, Industrial Temperature Range
	D32	BAV99	$BAV99		deliv. ACIII	SMD, Industrial Temperature Range
	D33	BAV99	$BAV99		deliv. ACIII	SMD, Industrial Temperature Range
	D34	BAV99	$BAV99		deliv. ACIII	SMD, Industrial Temperature Range
	D35	BAV99	$BAV99		deliv. ACIII	SMD, Industrial Temperature Range
	D36	BAV99	$BAV99		deliv. ACIII	SMD, Industrial Temperature Range
	D37	BAV99	$BAV99		deliv. ACIII	SMD, Industrial Temperature Range
	D38	BAV99	$BAV99		deliv. ACIII	SMD, Industrial Temperature Range
	D39	BAV99	$BAV99		deliv. ACIII	SMD, Industrial Temperature Range
	D40	BAV99	$BAV99		deliv. ACIII	SMD, Industrial Temperature Range
	D41	BAV99	$BAV99		deliv. ACIII	SMD, Industrial Temperature Range
	D42	BAV99	$BAV99		deliv. ACIII	SMD, Industrial Temperature Range
	D43	BAV99	$BAV99		deliv. ACIII	SMD, Industrial Temperature Range
	D44	BAV99	$BAV99		deliv. ACIII	SMD, Industrial Temperature Range
	D45	BAV99	$BAV99		deliv. ACIII	SMD, Industrial Temperature Range
	D46	BAS16	$BAS16		deliv. ACIII	SMD, Industrial Temperature Range
	D47	BAS16	$BAS16		deliv. ACIII	SMD, Industrial Temperature Range
	D48	BAS16	$BAS16		deliv. ACIII	SMD, Industrial Temperature Range
	D49	BAS16	$BAS16		deliv. ACIII	SMD, Industrial Temperature Range
	D50	BAS16	$BAS16		deliv. ACIII	SMD, Industrial Temperature Range
	DCDC1	TEN_5-2411	DCDC	**not installed**		DC-DC Converter
	J1	HDR_6	HDR1X6	**not installed**	**<<<<**	**!!! cover before soldering !!!**
	J2	HDR_6	HDR1X6	**not installed**	**<<<<**	**!!! cover before soldering !!!**
	J3	HDR_10	HDR2X5	**not installed**	**<<<<**	**!!! cover before soldering !!!**

	Component	Value	Shape	Assembly Note	Source	Ref. No.
	J4	HDR_8	HDR1X8	**not installed**	**<<<<**	**!!! cover before soldering !!!**
	J5	HDR_2	HDR1X2	**not installed**	**<<<<**	**!!! cover before soldering !!!**
	J6	HDR_24	HDR2X12	**not installed**	**<<<<**	**!!! cover before soldering !!!**
	J7	HDR_10	HDR2X5	**not installed**	**<<<<**	**!!! cover before soldering !!!**
	R1	4K7	R/C1206		deliv. from MIT	D55342K07B4E75R
	R2	4K7	R/C1206		deliv. from MIT	D55342K07B4E75R
	R3	10K	R/C1206		deliv. from MIT	D55342K07B10E0R
	R4	10K	R/C1206		deliv. from MIT	D55342K07B10E0R
	R5	4K7	R/C1206		deliv. from MIT	D55342K07B4E75R
	R6	0	R/C1206		deliv. from MIT	CRCW1206000Z
	R7	0	R/C1206		deliv. from MIT	CRCW1206000Z
	R8	0	R/C1206		deliv. from MIT	CRCW1206000Z
	R9	0	R/C1206		deliv. from MIT	CRCW1206000Z
	R10	0	R/C1206		deliv. from MIT	CRCW1206000Z
	R11	0	R/C1206		deliv. from MIT	CRCW1206000Z
	R12	0	R/C1206		deliv. from MIT	CRCW1206000Z
	R13	0	R/C1206		deliv. from MIT	CRCW1206000Z
	R14	39K	R/C1206		deliv. from MIT	D55342K07B39E2R
	R15	39K	R/C1206		deliv. from MIT	D55342K07B39E2R
	R16	1K	R/C1206		deliv. from MIT	D55342K07B1E00R
	R17	10K	R/C1206		deliv. from MIT	D55342K07B10E0R
	R18	10K	R/C1206		deliv. from MIT	D55342K07B10E0R
	R19	10K	R/C1206		deliv. from MIT	D55342K07B10E0R
	R20	0	R/C1206		deliv. from MIT	CRCW1206000Z
	R21	0	R/C1206	**not installed**		CRCW1206000Z
	R22	8K2	R/C1206		deliv. from MIT	D55342K07B8E25R
	R23	10K	R/C1206		deliv. from MIT	D55342K07B10E0R
	R24	15K	R/C1206		deliv. from MIT	D55342K07B15E0R
	R25	56K	R/C1206		deliv. from MIT	D55342K07B56E2R
	R26	1K	R/C1206		deliv. from MIT	D55342K07B1E00R
	R27	1K	R/C1206		deliv. from MIT	D55342K07B1E00R
	R28	0	R/C1206		deliv. from MIT	CRCW1206000Z
	R29	56K	R/C1206		deliv. from MIT	D55342K07B56E2R
	R30	100K	R/C1206		deliv. from MIT	D55342K07B100ER

	Component	Value	Shape	Assembly Note	Source	Ref. No.
	R31	4K7	R/C1206		deliv. from MIT	D55342K07B4E75R
	R32	22K	R/C1206		deliv. from MIT	D55342K07B22E1R
	R33	22K	R/C1206		deliv. from MIT	D55342K07B22E1R
	R34	15K	R/C1206		deliv. from MIT	D55342K07B15E0R
	R35	10K	R/C1206		deliv. from MIT	D55342K07B10E0R
	R36	10K	R/C1206		deliv. from MIT	D55342K07B10E0R
	R37	10K	R/C1206		deliv. from MIT	D55342K07B10E0R
	R38	10K	R/C1206		deliv. from MIT	D55342K07B10E0R
	R39	10K	R/C1206		deliv. from MIT	D55342K07B10E0R
	R40	10K	R/C1206		deliv. from MIT	D55342K07B10E0R
	R41	10K	R/C1206		deliv. from MIT	D55342K07B10E0R
	R42	10K	R/C1206		deliv. from MIT	D55342K07B10E0R
	R43	10K	R/C1206		deliv. from MIT	D55342K07B10E0R
	R44	10K	R/C1206		deliv. from MIT	D55342K07B10E0R
	R45	10K	R/C1206		deliv. from MIT	D55342K07B10E0R
	R46	10K	R/C1206		deliv. from MIT	D55342K07B10E0R
	R47	10K	R/C1206		deliv. from MIT	D55342K07B10E0R
	R48	10K	R/C1206		deliv. from MIT	D55342K07B10E0R
	R49	10K	R/C1206		deliv. from MIT	D55342K07B10E0R
	R50	10K	R/C1206		deliv. from MIT	D55342K07B10E0R
	R51	10K	R/C1206		deliv. from MIT	D55342K07B10E0R
	R52	10K	R/C1206		deliv. from MIT	D55342K07B10E0R
	R53	10K	R/C1206		deliv. from MIT	D55342K07B10E0R
	R54	10K	R/C1206		deliv. from MIT	D55342K07B10E0R
	R55	10K	R/C1206		deliv. from MIT	D55342K07B10E0R
	R56	10K	R/C1206		deliv. from MIT	D55342K07B10E0R
	R57	10K	R/C1206		deliv. from MIT	D55342K07B10E0R
	R58	10K	R/C1206		deliv. from MIT	D55342K07B10E0R
	R59	10K	R/C1206		deliv. from MIT	D55342K07B10E0R
	R60	10K	R/C1206		deliv. from MIT	D55342K07B10E0R
	R61	10K	R/C1206		deliv. from MIT	D55342K07B10E0R
	R62	10K	R/C1206		deliv. from MIT	D55342K07B10E0R
	R63	10K	R/C1206		deliv. from MIT	D55342K07B10E0R

	Component	Value	Shape	Assembly Note	Source	Ref. No.
	R64	10K	R/C1206		deliv. from MIT	D55342K07B10E0R
	R65	10K	R/C1206		deliv. from MIT	D55342K07B10E0R
	R66	10K	R/C1206		deliv. from MIT	D55342K07B10E0R
	R67	10K	R/C1206		deliv. from MIT	D55342K07B10E0R
	R68	10K	R/C1206		deliv. from MIT	D55342K07B10E0R
	R69	10K	R/C1206		deliv. from MIT	D55342K07B10E0R
	R70	10K	R/C1206		deliv. from MIT	D55342K07B10E0R
	R71	3K9	R/C1206		deliv. from MIT	D55342K07B3E92R
	R72	3K9	R/C1206		deliv. from MIT	D55342K07B3E92R
	R73	3K9	R/C1206		deliv. from MIT	D55342K07B3E92R
	R74	3K9	R/C1206		deliv. from MIT	D55342K07B3E92R
	R75	3K9	R/C1206		deliv. from MIT	D55342K07B3E92R
	R76	3K9	R/C1206		deliv. from MIT	D55342K07B3E92R
	R77	3K9	R/C1206		deliv. from MIT	D55342K07B3E92R
	R78	3K9	R/C1206		deliv. from MIT	D55342K07B3E92R
	R79	4K7	R/C1206		deliv. from MIT	D55342K07B4E75R
	R80	4K7	R/C1206		deliv. from MIT	D55342K07B4E75R
	R81	4K7	R/C1206		deliv. from MIT	D55342K07B4E75R
	R82	4K7	R/C1206		deliv. from MIT	D55342K07B4E75R
	R83	4K7	R/C1206		deliv. from MIT	D55342K07B4E75R
	R84	4K7	R/C1206		deliv. from MIT	D55342K07B4E75R
	R85	4K7	R/C1206		deliv. from MIT	D55342K07B4E75R
	R86	4K7	R/C1206		deliv. from MIT	D55342K07B4E75R
	R87	15K	R/C1206		deliv. from MIT	D55342K07B15E0R
	R88	0	R/C1206		deliv. from MIT	CRCW1206000Z
	R89	0	R/C1206		deliv. from MIT	CRCW1206000Z
	R90	4K7	R/C1206		deliv. from MIT	D55342K07B4E75R
	R91	10K	R/C1206		deliv. from MIT	D55342K07B10E0R
	R92	15K	R/C1206		deliv. from MIT	D55342K07B15E0R
	R93	100	R/C1206	**not installed**		LVDS terminator
	R94	0	R/C1206		deliv. from MIT	CRCW1206000Z
	R95	0	R/C1206		deliv. from MIT	CRCW1206000Z
	R96	100	R/C1206	**not installed**		LVDS terminator

	Component	Value	Shape	Assembly Note	Source	Ref. No.
	R97	100	R/C1206	**not installed**		LVDS terminator
	R98	22K	R/C1206		deliv. from MIT	D55342K07B22E1R
	R99	10K	R/C1206		deliv. from MIT	D55342K07B10E0R
	R100	10K	R/C1206		deliv. from MIT	D55342K07B10E0R
	R101	4K7	R/C1206		deliv. from MIT	D55342K07B4E75R
	R102	10K	R/C1206		deliv. from MIT	D55342K07B10E0R
	R103	22K	R/C1206		deliv. from MIT	D55342K07B22E1R
	R104	22K	R/C1206		deliv. from MIT	D55342K07B22E1R
	R105	100K	R/C1206		deliv. from MIT	D55342K07B1E00R
	R106	4K7	R/C1206		deliv. from MIT	D55342K07B4E75R
	R111	0	R/C1206		deliv. from MIT	CRCW1206000Z
	R112	0	R/C1206		deliv. from MIT	CRCW1206000Z
	R114	10K	R/C1206_W	**not installed**		D55342K07B10E0R
	R115	1K	R/C1206		deliv. from MIT	D55342K07B1E00R
	R116	1K	R/C1206		deliv. from MIT	D55342K07B1E00R
	R117	10K	R/C1206		deliv. from MIT	D55342K07B10E0R
	R118	1K	R/C1206	**not installed**		LED current limiter
	R119	0	R/C1206		deliv. from MIT	CRCW1206000Z
	R120	0	R/C1206	**not installed**		CRCW1206000Z
	R122	1K	R/C1206		deliv. from MIT	D55342K07B1E00R
	R123	100K	R/C1206	**not installed**		D55342K07B100ER
	R124	1	R/C1206_W	**not installed**		DC-DC Fuse
	R125	1	R/C1206_W	**not installed**		DC-DC Fuse
	R126	1	R/C1206_W	**not installed**		DC-DC Fuse
	R127	1	R/C1206_W	**not installed**		DC-DC Fuse
	R128	1	R/C1206_W	**not installed**		DC-DC Fuse
	R129	1K	R/C1206	**not installed**		D55342K07B1E00R
	R130	56K	R/C1206	**not installed**		D55342K07B56E2R
	R131	10K	R/C1206	**not installed**		D55342K07B10E0R
	R132	22K	R/C1206	**not installed**		D55342K07B22E1R
	R133	10K	R/C1206	**not installed**		D55342K07B10E0R
	R134	1K	R/C1206		deliv. from MIT	D55342K07B100ER
	R135	100K	R/C1206		deliv. from MIT	D55342K07B100ER
	R136	1K	R/C1206		deliv. from MIT	D55342K07B1E00R

	Component	Value	Shape	Assembly Note	Source	Ref. No.
	R137	1K	R/C1206		deliv. from MIT	D55342K07B1E00R
	R138	100K	R/C1206		deliv. from MIT	D55342K07B100ER
	R139	10K	R/C1206		deliv. from MIT	D55342K07B10E0R
	R140	100K	R/C1206		deliv. from MIT	D55342K07B100ER
	R141	100K	R/C1206		deliv. from MIT	D55342K07B100ER
	R142	1K	R/C1206		deliv. from MIT	D55342K07B1E00R
	R143	1K	R/C1206		deliv. from MIT	D55342K07B1E00R
	R144	10K	R/C1206		deliv. from MIT	D55342K07B100ER
	R145	10K	R/C1206		deliv. from MIT	D55342K07B10E0R
	R146	0	R/C1206	**not installed**		CRCW1206000Z
	R147	0	R/C1206_W	**not installed**		CRCW1206000Z
	R148	10K	R/C1206		deliv. from MIT	D55342K07B10E0R
	R149	100K	R/C1206		deliv. from MIT	D55342K07B10E0R
	R150	10K	R/C1206		deliv. from MIT	D55342K07B10E0R
	R151	0	R/C1206	**not installed**		CRCW1206000Z
	R152	15K	R/C1206		deliv. from MIT	D55342K07B15E0R
	SMDLED1	SMDLED	SOT23LED	**not installed**		LED diode
	T1	BC817-40	SOT23		deliv. ACIII	SMD, Industrial Temperature Range
	T2	BC817-40	SOT23		deliv. ACIII	SMD, Industrial Temperature Range
	T3	BC817-40	SOT23		deliv. ACIII	SMD, Industrial Temperature Range
	T4	BC807-40	SOT23		deliv. ACIII	SMD, Industrial Temperature Range
	T5	BC807-40	SOT23		deliv. ACIII	SMD, Industrial Temperature Range
	T6	BC807-40	SOT23		deliv. ACIII	SMD, Industrial Temperature Range
	T7	BC807-40	SOT23		deliv. ACIII	SMD, Industrial Temperature Range
	T8	BC807-40	SOT23		deliv. ACIII	SMD, Industrial Temperature Range
	T9	BC807-40	SOT23		deliv. ACIII	SMD, Industrial Temperature Range
	T10	BC807-40	SOT23		deliv. ACIII	SMD, Industrial Temperature Range
	T11	BC807-40	SOT23		deliv. ACIII	SMD, Industrial Temperature Range
	T12	TERM_100	$RAKOB16	**not installed**		LVDS terminator
	T13	TERM_100	$RAKOB16	**not installed**		LVDS terminator
	T14	TERM_100	$RAKOB16	**not installed**		LVDS terminator
	T15	BC817-40	SOT23		deliv. ACIII	SMD, Industrial Temperature Range
	T16	BC817-40	SOT23		deliv. ACIII	SMD, Industrial Temperature Range

	Component	Value	Shape	Assembly Note	Source	Ref. No.
	T17	BC807-40	SOT23		deliv. ACIII	SMD, Industrial Temperature Range
	T18	BC817-40	SOT23	**not installed**		DC-DC Fuse
	T19	BC817-40	SOT23	**not installed**		DC-DC Fuse
	T20	BC817-40	SOT23		deliv. ACIII	SMD, Industrial Temperature Range
	T21	BC807-40	SOT23		deliv. ACIII	SMD, Industrial Temperature Range
	T22	BC817-40	SOT23		deliv. ACIII	SMD, Industrial Temperature Range
	T23	BC817-40	SOT23		deliv. ACIII	SMD, Industrial Temperature Range
	T24	BC817-40	SOT23		deliv. ACIII	SMD, Industrial Temperature Range
	T25	BC817-40	SOT23		deliv. ACIII	SMD, Industrial Temperature Range
	T26	BC817-40	SOT23		deliv. ACIII	SMD, Industrial Temperature Range
	T27	BC817-40	SOT23		deliv. ACIII	SMD, Industrial Temperature Range
	T28	BC817-40	SOT23		deliv. ACIII	SMD, Industrial Temperature Range
	U1	MAX813LESA	SO8		deliv. ACIII	SMD, Industrial Temperature Range
	U2	DS80C390QNR	$PLCC68		deliv. ACIII	SMD, Industrial Temperature Range
	U3	SN74ACT573DW	SOL20		deliv. ACIII	SMD, Industrial Temperature Range
	U4	PCA82C250T	SO8		deliv. ACIII	SMD, Industrial Temperature Range
	U5	PCA82C250T	SO8		deliv. ACIII	SMD, Industrial Temperature Range
	U6	M27C1001-45XF1	DIP32	**not installed**		Debug EPROM & socket
	U7	ISS61C1024-15KI	$SOJ32P400		deliv. ACIII	SMD, Industrial Temperature Range
	U8	NX29F010-45PLI	$PLCC32		deliv. ACIII	SMD, Industrial Temperature Range
	U9	AT27C010-55JI	$PLCC32		deliv. ACIII	SMD, Industrial Temperature Range
	U10	MAX892LEUA	8UMAX		deliv. ACIII	SMD, Industrial Temperature Range
	U11	MAX892LEUA	8UMAX		deliv. ACIII	SMD, Industrial Temperature Range
	U12	MAX892LEUA	8UMAX		deliv. ACIII	SMD, Industrial Temperature Range
	U13	MAX891LEUA	8UMAX		deliv. ACIII	SMD, Industrial Temperature Range
	U14	MAX892LEUA	8UMAX		deliv. ACIII	SMD, Industrial Temperature Range
	U15	MAX892LEUA	8UMAX		deliv. ACIII	SMD, Industrial Temperature Range
	U16	74HCT273	SOL20		deliv. ACIII	SMD, Industrial Temperature Range
	U17	DS90C031TM	SO16		deliv. ACIII	SMD, Industrial Temperature Range
	U18	74HCT273	SOL20		deliv. ACIII	SMD, Industrial Temperature Range
	U19	74HCT273	SOL20		deliv. ACIII	SMD, Industrial Temperature Range
	U20	74HCT74	SO14		deliv. ACIII	SMD, Industrial Temperature Range
	U21	74HCT74	SO14		deliv. ACIII	SMD, Industrial Temperature Range

	Component	Value	Shape	Assembly Note	Source	Ref. No.
	U22	DS90C031TM	SO16		deliv. ACIII	SMD, Industrial Temperature Range
	U23	DS90C031TM	SO16		deliv. ACIII	SMD, Industrial Temperature Range
	U24	MAX525BEAP	$MAX_525		deliv. ACIII	SMD, Industrial Temperature Range
	U25	MAX525BEAP	$MAX_525		deliv. ACIII	SMD, Industrial Temperature Range
	U26	MAX525BEAP	$MAX_525		deliv. ACIII	SMD, Industrial Temperature Range
	U27	MAX525BEAP	$MAX_525		deliv. ACIII	SMD, Industrial Temperature Range
	U28	74HCT32	SO14		deliv. ACIII	SMD, Industrial Temperature Range
	U29	74HCT74	SO14		deliv. ACIII	SMD, Industrial Temperature Range
	U30	74HCT74	SO14		deliv. ACIII	SMD, Industrial Temperature Range
	U31	ADR290FR	SO8		deliv. ACIII	SMD, Industrial Temperature Range
	U32	MAX4162EUK	SOT23_5		deliv. ACIII	SMD, Industrial Temperature Range
	U33	MAX4162EUK	SOT23_5		deliv. ACIII	SMD, Industrial Temperature Range
	U34	MAX4162EUK	SOT23_5		deliv. ACIII	SMD, Industrial Temperature Range
	U35	MAX4162EUK	SOT23_5		deliv. ACIII	SMD, Industrial Temperature Range
	U36	MAX186-DEAP	$MAX_186		deliv. ACIII	SMD, Industrial Temperature Range
	U37	MAX186-DEAP	$MAX_186		deliv. ACIII	SMD, Industrial Temperature Range
	U38	MAX186-DEAP	$MAX_186		deliv. ACIII	SMD, Industrial Temperature Range
	U39	MAX186-DEAP	$MAX_186		deliv. ACIII	SMD, Industrial Temperature Range
	U40	74HCT125	SO14		deliv. ACIII	SMD, Industrial Temperature Range
	U41	74HCT32	SO14		deliv. ACIII	SMD, Industrial Temperature Range
	U42	74HCT74	SO14		deliv. ACIII	SMD, Industrial Temperature Range
	U43	74HCT74	SO14		deliv. ACIII	SMD, Industrial Temperature Range
	U44	74HCT74	SO14		deliv. ACIII	SMD, Industrial Temperature Range
	U45	74HCT32	SO14		deliv. ACIII	SMD, Industrial Temperature Range
	U46	74HCT74	SO14		deliv. ACIII	SMD, Industrial Temperature Range
	U47	74HCT574	SOL20		deliv. ACIII	SMD, Industrial Temperature Range
	U48	74HCT245	SOL20		deliv. ACIII	SMD, Industrial Temperature Range
	U49	74HCT32	SO14		deliv. ACIII	SMD, Industrial Temperature Range
	U50	74HCT08	SO14		deliv. ACIII	SMD, Industrial Temperature Range
	U51	DS90C031TM	SO16		deliv. ACIII	SMD, Industrial Temperature Range
	U52	74HCT138	SO16		deliv. ACIII	SMD, Industrial Temperature Range
	U53	74AHCT139	SO16		deliv. ACIII	SMD, Industrial Temperature Range
	U54	74HCT30	SO14		deliv. ACIII	SMD, Industrial Temperature Range

	Component	Value	Shape	Assembly Note	Source	Ref. No.
	U55	74HCT04	SO14		deliv. ACIII	SMD, Industrial Temperature Range
	U56	74HCT139	SO16		deliv. ACIII	SMD, Industrial Temperature Range
	U57	74HCT139	SO16		deliv. ACIII	SMD, Industrial Temperature Range
	U58	74HCT139	SO16		deliv. ACIII	SMD, Industrial Temperature Range
	U59	ISS61C1024-15KI	$SOJ32P400		deliv. ACIII	SMD, Industrial Temperature Range
	U60	MAX892LEUA	8UMAX		deliv. ACIII	SMD, Industrial Temperature Range
	U61	74HCT32	SO14		deliv. ACIII	SMD, Industrial Temperature Range
	U62	74HCT32	SO14		deliv. ACIII	SMD, Industrial Temperature Range
	U63	SI4466DY	SO8		deliv. ACIII	SMD, Industrial Temperature Range
	U64	SI4466DY	SO8		deliv. ACIII	SMD, Industrial Temperature Range
	U65	SI4466DY	SO8		deliv. ACIII	SMD, Industrial Temperature Range
	U66	SI4466DY	SO8		deliv. ACIII	SMD, Industrial Temperature Range
	U67	SI4466DY	SO8		deliv. ACIII	SMD, Industrial Temperature Range
	U68	SI4466DY	SO8		deliv. ACIII	SMD, Industrial Temperature Range
	U69	SI4466DY	SO8		deliv. ACIII	SMD, Industrial Temperature Range
	U70	74AHCT08	SO14		deliv. ACIII	SMD, Industrial Temperature Range
	U71	DS90C031TM	SO16		deliv. ACIII	SMD, Industrial Temperature Range
	U72	DS90C031TM	SO16		deliv. ACIII	SMD, Industrial Temperature Range
	U73	DS90C031TM	SO16		deliv. ACIII	SMD, Industrial Temperature Range
	U74	DS90C032TM	SO16		deliv. ACIII	SMD, Industrial Temperature Range
	U75	DS90C032TM	SO16		deliv. ACIII	SMD, Industrial Temperature Range
	U76	DS90C032TM	SO16		deliv. ACIII	SMD, Industrial Temperature Range
	U77	DS90C032TM	SO16		deliv. ACIII	SMD, Industrial Temperature Range
	U78	DS90C032TM	SO16		deliv. ACIII	SMD, Industrial Temperature Range
	U79	74HCT125	SO14		deliv. ACIII	SMD, Industrial Temperature Range
	U80	74HCT74	SO14		deliv. ACIII	SMD, Industrial Temperature Range
	U81	DS18S20Z	SO8		deliv. ACIII	SMD, Industrial Temperature Range
	U82	74HCT30	SO14		deliv. ACIII	SMD, Industrial Temperature Range
	U83	74HCT74	SO14		deliv. ACIII	SMD, Industrial Temperature Range
	U84	SI4401DY	SO8	**not installed**		DC-DC Fuse
	U85	SI4401DY	SO8		deliv. ACIII	SMD, Industrial Temperature Range
	U86	74HCT221	SO16		deliv. ACIII	SMD, Industrial Temperature Range
	VMEJ1	DIN_96ABC	DIN41612ABC		deliv. ACIII	Harting 09 03 196 4921
	VMEJ2	DIN_96ABC	DIN41612ABC		deliv. ACIII	Harting 09 03 196 4921
	X1	16MHZ	STATEK		deliv. ACIII	CX-3-SM3-16MHZ 25ppm/30ppm/55ppm/M
	PCB	USCM3S3B	233X160		deliv. ACIII	PRINTCA MIL-P-55110D

	USCM3S3b		**28.05.03**	**V.Commichau**		
	Summary		**80**	**Boards**		
Total	**Component**	**Value**	**Shape**	**Assembly Note**	**Source**	**Ref. No.**
160	2	22PF	R/C1206		deliv. from MIT	CDR32BP220BKWS
160	2	22PF	805	alternative shape		
5760	72	39NF	R/C1206		deliv. from MIT	CDR32BX393AKWS
1440	18	39NF	R/C1206_W		deliv. from MIT	CDR32BX393AKWS
960	12	10UF	TAN_MIL		deliv. from MIT	CRW11HH106KC
960	12	10UF	TAN_B_W	alternative shape		
1440	18	BAS16	$BAS16		deliv. ACIII	SMD, Industrial Temperature Range
2560	32	BAV99	$BAV99		deliv. ACIII	SMD, Industrial Temperature Range
1200	15	4K7	R/C1206		deliv. from MIT	D55342K07B4E75R
4320	54	10K	R/C1206		deliv. from MIT	D55342K07B10E0R
1600	20	0	R/C1206		deliv. from MIT	CRCW1206000Z
320	4	56K	R/C1206		deliv. from MIT	D55342K07B56E2R
160	2	39K	R/C1206		deliv. from MIT	D55342K07B39E2R
1040	13	1K	R/C1206		deliv. from MIT	D55342K07B1E00R
80	1	8K2	R/C1206		deliv. from MIT	D55342K07B8E25R
400	5	15K	R/C1206		deliv. from MIT	D55342K07B15E0R
720	9	100K	R/C1206		deliv. from MIT	D55342K07B100ER
480	6	22K	R/C1206		deliv. from MIT	D55342K07B22E1R
640	8	3K9	R/C1206		deliv. from MIT	D55342K07B3E92R
240	3	100	R/C1206		deliv. from MIT	D55342K07B100DR
0	0	10K	R/C1206_W		deliv. from MIT	D55342K07B10E0R
400	5	1	R/C1206_W	**not installed**		
80	1	560	R/C1206		deliv. from MIT	D55342K07B562DR
80	1	0	R/C1206_W		deliv. from MIT	CRCW1206000Z
80	1	SMDLED	SOT23LED			
1200	15	BC817-40	SOT23		deliv. ACIII	SMD, Industrial Temperature Range
800	10	BC807-40	SOT23		deliv. ACIII	SMD, Industrial Temperature Range
240	3	TERM_100	$RAKOB16	**not installed**		
80	1	MAX813LESA	SO8		deliv. ACIII	SMD, Industrial Temperature Range
80	1	DS80C390QNR	$PLCC68		deliv. ACIII	SMD, Industrial Temperature Range
80	1	SN74ACT573DW	SOL20		deliv. ACIII	SMD, Industrial Temperature Range
160	2	PCA82C250T	SO8		deliv. ACIII	SMD, Industrial Temperature Range
160	2	ISS61C1024-15KI	$SOJ32P400		deliv. ACIII	SMD, Industrial Temperature Range

Total	Component	Vale	Shape	Assembly Note	Source	Ref. No.
80	1	NX29F010-45PLI	$PLCC32		deliv. ACIII	SMD, Industrial Temperature Range
80	1	AT27C010-55JI	$PLCC32		deliv. ACIII	SMD, Industrial Temperature Range
480	6	MAX892LEUA	8UMAX		deliv. ACIII	SMD, Industrial Temperature Range
80	1	MAX891LEUA	8UMAX		deliv. ACIII	SMD, Industrial Temperature Range
240	3	74HCT273	SOL20		deliv. ACIII	SMD, Industrial Temperature Range
560	7	DS90C031TM	SO16		deliv. ACIII	SMD, Industrial Temperature Range
800	10	74HCT74	SO14		deliv. ACIII	SMD, Industrial Temperature Range
320	4	MAX525BEAP	$MAX_525		deliv. ACIII	SMD, Industrial Temperature Range
480	6	74HCT32	SO14		deliv. ACIII	SMD, Industrial Temperature Range
80	1	ADR290FR	SO8		deliv. ACIII	SMD, Industrial Temperature Range
320	4	MAX4162EUK	SOT23_5		deliv. ACIII	SMD, Industrial Temperature Range
320	4	MAX186-DEAP	$MAX_186		deliv. ACIII	SMD, Industrial Temperature Range
160	2	74HCT125	SO14		deliv. ACIII	SMD, Industrial Temperature Range
80	1	74HCT574	SOL20		deliv. ACIII	SMD, Industrial Temperature Range
80	1	74HCT245	SOL20		deliv. ACIII	SMD, Industrial Temperature Range
80	1	74HCT08	SO14		deliv. ACIII	SMD, Industrial Temperature Range
80	1	74AHCT08	SO14		deliv. ACIII	SMD, Industrial Temperature Range
80	1	74HCT138	SO16		deliv. ACIII	SMD, Industrial Temperature Range
240	3	74HCT139	SO16		deliv. ACIII	SMD, Industrial Temperature Range
80	1	74AHCT139	SO16		deliv. ACIII	SMD, Industrial Temperature Range
160	2	74HCT30	SO14		deliv. ACIII	SMD, Industrial Temperature Range
80	1	74HCT04	SO14		deliv. ACIII	SMD, Industrial Temperature Range
560	7	SI4466DY	SO8		deliv. ACIII	SMD, Industrial Temperature Range
400	5	DS90C032TM	SO16		deliv. ACIII	SMD, Industrial Temperature Range
80	1	DS18S20Z	SO8		deliv. ACIII	SMD, Industrial Temperature Range
160	2	SI4401DY	SO8		deliv. ACIII	SMD, Industrial Temperature Range
80	1	74HCT221	SO16		deliv. ACIII	SMD, Industrial Temperature Range
160	2	DIN_96ABC	DIN41612ABC		deliv. ACIII	Harting 09 03 196 4921
80	1	16MHZ	STATEK		deliv. ACIII	CX-3-SM3-16MHZ 25ppm/30ppm/55ppm/M
80	PCB	USCM3S3B	233X160		deliv. ACIII	PRINTCA MIL-P-55110D

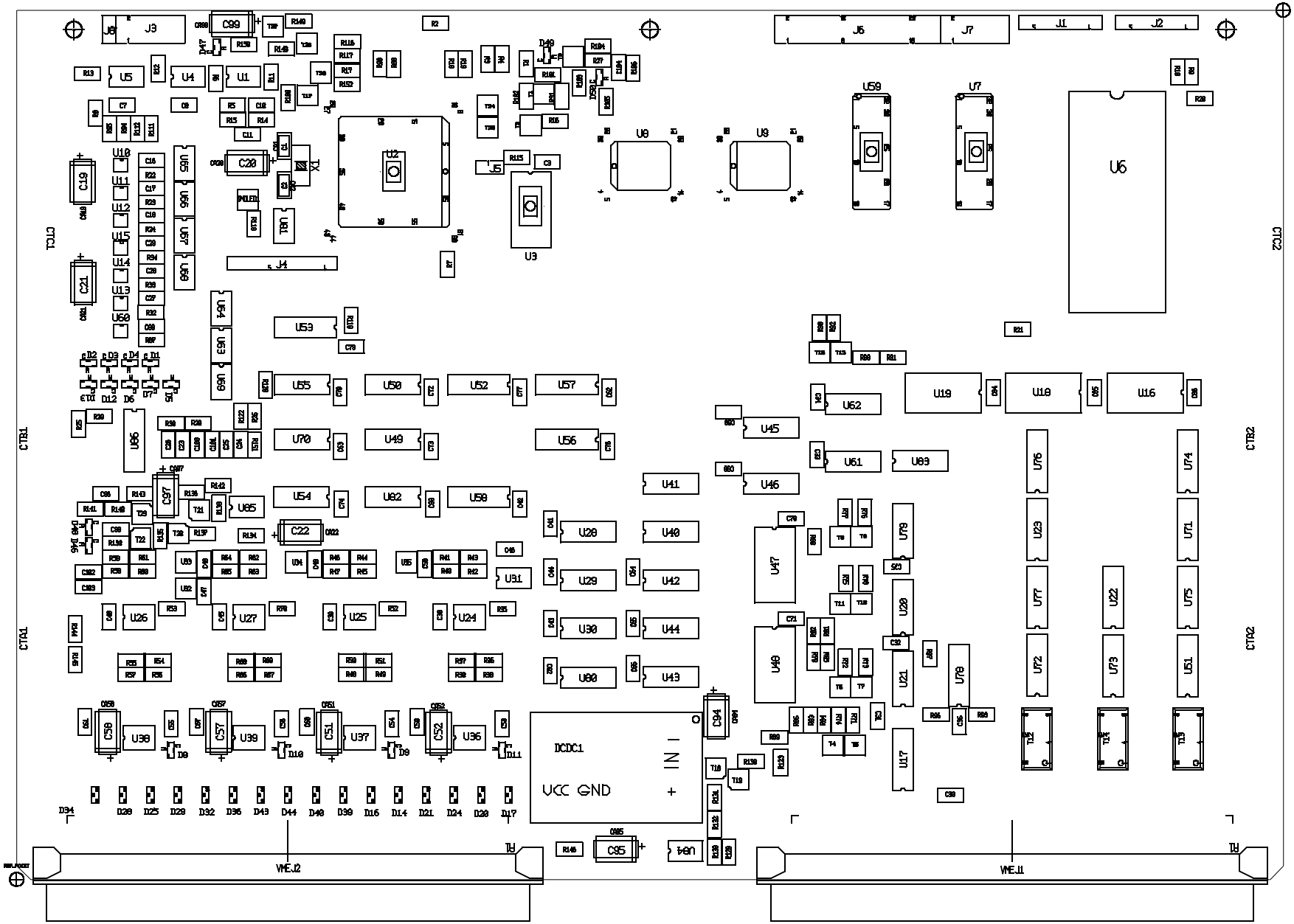

DCDC1
VCC GND
IN
VMEJ2
VMEJ1
CTC1
CTC2
CTB1
CTB2
CTA1
CTA2