CARLO GAVAZZI SPACE SpA	AMS-02

Tipo Doc.: *Doc.Type:*	SPECIFICATION			N° DRD: *DRD N°:*	NA
N° Doc.: *Doc. N°:*	**AMS-RQ-CGS-002**	Ediz.: *Issue:* **1**	Data: *Date:* **APRIL 2007**	Pagina *Page* **1**	Di *Of* **82**
Titolo : *Title :*	POWER DISTRIBUTION SYSTEM (PDS) SPECIFICATIONS				

	Nome & Funzione *Name & Function*	Firma *Signature*	Data *Date*
Preparato da: *Prepared by:*	PDS Team		
Approvato da: *Approved by:*	S. Alia (SYS) E. Francini (PA/QA) C. Cinquepalmi (PA/CC)		6-4-07 06/04/07 06/04/07
Applicazione autorizzata da: *Application authorized by:*	M. Olivier (PM)	M. Olivier	06.04.07

PDScustomer / Higher Level Contractor

Accettato da: *Accepted by:*			
Approvato da: *Approved by:*			

LISTA DI DISTRIBUZIONE *DISTRIBUTION LIST*	N	A	I
Interna / *Internal*			
PDS Team	1		x
Esterna / *External*			

N=Numero di copie A=Applicazione I=Informazione
N=Number of copy A=Application I=Information

Gestione doPDSmenti: *Data Management:*	Firma / *Signature*	Data / *Date* 06/04/07	File: AMS-RQ-CGS-002 Is1.doc

Questo doPDSmento contiene informazioni di proprietà di CARLO GAVAZZI SPACE SpA: Tutti i diritti sono riservati
All information contained in this doPDSment are property of CARLO GAVAZZI SPACE SpA. All right reserved.

REGISTRAZIONE DELLE MODIFICHE / *CHANGE RECORD*

EDIZIONE *ISSUE*	DATA *DATE*	AUTORIZZAZIONE *CHANGE AUTHORITY*	OGGETTO DELLA MODIFICA E SEZIONI AFFETTE *REASON FOR CHANGE AND AFFECTED SECTIONS*
1	April 2007	---	First issue

Questo doPDSmento contiene informazioni di proprietà di CARLO GAVAZZI SPACE SpA. Tutti i diritti sono riservati.
All information contained in this doPDSment are property of CARLO GAVAZZI SPACE SpA. All right reserved.

LISTA DELLE PAGINE VALIDE / *LIST OF VALID PAGES*

PAGINA *PAGE*	EDIZIONE *ISSUE*	PAGINA *PAGE*	EDIZIONE *ISSUE*	PAGINA *PAGE*	EDIZIONE *ISSUE*	PAGINA *PAGE*	EDIZIONE *ISSUE*	PAGINA *PAGE*	EDIZIONE *ISSUE*
1 - 82	1								

Questo doPDSmento contiene informazioni di proprietà di CARLO GAVAZZI SPACE SpA. Tutti i diritti sono riservati.
All information contained in this doPDSment are property of CARLO GAVAZZI SPACE SpA. All right reserved.

TABLE OF CONTENT

1. SCOPE 10

1.1 OVERALL CONCEPT 10

2. DOCUMENTS 13

2.1 APPLICABLE DOCUMENTS 13
2.2 REFERENCE DOCUMENTS 13

3. PDS REQUIREMENTS 14

3.1 OPERATIONAL REQUIREMENTS 14
3.1.1 MISSION PROFILE AND LIFE LIMITS 14
3.1.1.1 Mission Phases 14
3.1.1.2 On-orbit life time 14
3.1.1.3 Storage 14
3.2 FUNCTIONAL AND PHYSICAL CHARACTERISTICS 15
3.2.1 PDS FUNCTIONALITY AND PERFORMANCE 15
3.2.1.1 Operational conditions 15
3.2.1.2 Stay-alive in NSTS Cargo Bay 15
3.2.1.3 Transfer from ISS SSRMS Arm to Its location on ISS Truss S3 15
3.2.1.4 On-orbit Nominal Operative mode 16
3.2.1.5 Power provided to PDS A-SECTION 16
3.2.1.6 power provided to pds b-section 16
3.2.1.7 PDS dissipated Power Budget 16
3.2.1.8 Power-Up 17
3.2.1.9 PDS REDUNCANCY 17
3.2.1.10 PDS electrical REDUNCANCY performance 17
3.2.1.11 Power Conversion and Distribution 18
3.2.1.11.1 120Vdc to CCS/CAB 18
3.2.1.11.2 120Vdc to CCS/CAB characteristics 18
3.2.1.11.3 120Vdc to CCS/CAB galvanic isolation 18
3.2.1.12 Power Boards Commanding and Acquisition 19
3.2.1.12.1 Command/Monitor interface 19
3.2.1.13 PDS signal and power interfaces 20
3.2.1.14 Protections on Power Supply Lines 22
3.2.1.14.1 General 22
3.2.1.14.2 Trip Coordination 22
3.2.1.14.3 Over-temperature Protection 22
3.2.1.14.4 On Board Measurements 23
3.2.2 PDS INPUT STAGE 24
3.2.2.1 PDS thermal inter-lock 25
3.2.2.2 PDS EMI FILTER INPUT IMPEDANCE 25
3.2.2.2.1 PDS EMI FILTER INPUT inrush current 25
3.2.2.3 PDS input telemetry section 26
3.2.2.3.1 PDS current monitor accuracy 26
3.2.2.3.2 PDS voltage monitor accuracy 26
3.2.3 PDS 28V OUTPUT 27
3.2.3.1 general 27
3.2.3.2 PDS 28V output characteristics 27
3.2.3.3 PDS DC/DC Converter primary to secondary isolation 27
3.2.3.4 PDS 28Vdc outlets voltage monitor 27
3.2.3.5 PDS 28Vdc outlets over-voltage protection 28
3.2.3.6 PDS 28V outLET current ratings 28
3.2.3.7 PDS 28V outlet current monitor 28
3.2.3.8 PDS 28V outlet over current protections 29
3.2.4 PDS 120V OUTPUT 31
3.2.4.1 general 31

Questo doPDSmento contiene informazioni di proprietà di CARLO GAVAZZI SPACE SpA. Tutti i diritti sono riservati.
All information contained in this doPDSment are property of CARLO GAVAZZI SPACE SpA. All right reserved.

3.2.4.2 PDS 120V outlet output voltage 31
3.2.4.3 PDS 120V outlet output galvanic isolation 31
3.2.4.4 PDS 120V outlet current monitor 31
3.2.4.5 PDS 120V outlet output protection 32
3.2.4.6 CCEB OUTLET current limiter and over-current protection 32
3.2.4.7 PDS CCEB OUTLET current monitor 33
3.2.5 PDS INTERFACE WITH AMS (CAN BUS INTERFACE) 34
3.2.5.1 general 34
3.2.5.2 can bus interface software 35
3.2.5.3 can bus interface HW/sw compatibility 35
3.2.5.4 analog input 35
3.2.5.5 REdundancy 35
3.2.6 PDS CONTROL LOGIC 36
3.2.6.1 global switch off capability 36
3.2.7 THERMAL CONTROL 37
3.2.7.1 thermal control general concept 37
3.2.7.2 heat dissipation 37
3.2.7.2.1 architecture 37
3.2.7.2.2 circuit protections 37
3.2.7.2.3 thermal interlock thermostats 38
3.2.7.3 Temperature Sensors Acquired Internally of PDS 38
3.2.7.4 Thermal interface constraints 39

4. INTERFACE REQUIREMENTS 40

4.1 ELECTRICAL INTERFACE REQUIREMENTS 40
4.1.1 DEFINITION 40
4.1.2 ON-BOARD EXTERNAL INTERFACE DEFINITION 40
4.1.2.1 STS Interfaces 40
4.1.2.2 SSRMS Interfaces 40
4.1.2.3 ISS Interfaces 40
4.1.3 ON-BOARD INTERNAL INTERFACE DEFINITION 41
4.1.3.1 AMS02 SUBsystems / Instruments Interfaces 41
4.1.4 INPUT POWER INTERFACE REQUIREMENTS 41
4.1.4.1 Steady State Voltage Range (NOMinal OPERATIONS) 41
4.1.4.2 Peak surge current 41
4.1.4.3 Ripple Voltage And Noise 42
4.1.4.4 Transient Voltages 43
4.1.4.5 Abnormal Voltage Conditions 44
4.1.4.6 unscheduled loss of power 45
4.1.4.7 PDS power input Impedence 45
4.1.4.8 Large Signal Stability 47
4.1.5 CHARACTERISTICS OF ELECTRICAL 28VDC POWER SUPPLY TO AMS02 SUBSYSTEMS AND INSTRUMENTS 48
4.1.5.1 28-VDC Steady-State Voltage Range 48
4.1.5.2 28-VDC Output Power 48
4.1.5.3 source Voltage Ripple 50
4.1.5.4 Normal Transient Voltage Characteristics 50
4.1.5.5 Transients Output Voltages on Outlets Switching 50
4.1.5.6 Transients Output Voltages on Outlets Protection Tripping 51
4.1.5.7 28 -VDC Over-Voltage Protection 51
4.1.5.8 28 -VDC Over-Voltage Transient 51
4.1.5.9 28 -VDC Voltage Transient for abnormal operation 52
4.1.5.10 Power output protection status monitoring 53
4.1.5.11 Power output switching commanding 53
4.1.5.12 Power output switching status monitoring 53
4.1.5.13 Power output reset 53
4.1.6 CHARACTERISTICS OF ELECTRICAL 120VDC POWER SUPPLY TO AMS02 SUBSYSTEMS AND INSTRUMENTS 54
4.1.6.1 120-VDC Output Power 54
4.1.6.2 120-Vdc Output CUrrent Rating 54

Questo doPDSmento contiene informazioni di proprietà di CARLO GAVAZZI SPACE SpA. Tutti i diritti sono riservati.
All information contained in this doPDSment are property of CARLO GAVAZZI SPACE SpA. All right reserved.

4.1.6.3 Power output protection status monitoring 54
4.1.6.4 Power output switching commanding 54
4.1.6.5 Power output switching status monitoring 54
4.1.6.6 CCEB Power output reset 55
4.2 MECHANICAL INTERFACE REQUIREMENTS 56
4.2.1 MECHANICAL INTERFACE 56
4.2.1.1 Venting hole 57
4.2.1.2 Co-ordinate System 57
4.2.1.3 Envelope 58
4.2.1.4 Mass 58
4.2.1.5 Connector accommodation 58
4.2.1.6 Bonding Stud 59
4.2.2 STRUCTURAL INTERFACES 59
4.2.2.1 Notching criteria 60
4.2.2.2 PDS Structural FEM 60
4.3 THERMAL INTERFACE REQUIREMENTS 61
4.3.1 THERMAL REQUIREMENTS 61
4.3.1.1 Thermal Control Concept 61
4.3.1.2 Temperature Limits (definitions) 61
4.3.1.2.1 Flight operating temperature limits 61
4.3.1.2.2 Qualification temperature limits 61
4.3.1.2.3 Non operating temperature limits 61
4.3.1.2.4 Start up temperature 61
4.3.1.2.5 Ground storage temperature 61
4.3.1.2.6 Components Temperature Limits 62
4.3.1.3 Temperature Reference Point 62
4.3.1.4 Thermal properties 62
4.3.1.4.1 General 62
4.3.1.4.2 Ageing/radiation 62
4.3.2 PDS TO AMS02 THERMAL INTERFACES 63
4.3.3 OPERATING TEMPERATURE RANGE 63
4.3.4 NON-OPERATING TEMPERATURE RANGE 63
4.4 CONNECTOR REQUIREMENTS 64
4.4.1 CONNECTOR CHARACTERISTICS 64
4.4.1.1 Allocation optimisation 64
4.4.1.2 Circular connector orientation 64
4.4.1.3 Connector fixation 64
4.4.1.4 Connector pin assignment 64
4.4.1.5 Twisted wires 64
4.4.1.6 Flying unmated connector 65
4.4.1.7 Dust caps 65
4.4.1.8 Functional interface drawings 65
4.4.1.9 Interface tables 65

5. ENVIRONMENTAL REQUIREMENTS 66

5.1 CLEANLINESS AND CONTAMINATION CONTROL 66
5.1.1 EQUIPMENT SURFACE CLEANLINESS 66
5.1.1.1 Design for cleanliness 66
5.1.1.2 Cleanliness level 66
5.1.1.3 External Contamination 66
5.1.1.4 Molecular Deposition From Materials Outgassing and Venting 66
5.2 RADIATION ENVIRONMENT 67
5.3 MECHANICAL ENVIRONMENT 67
5.4 THERMAL ENVIRONMENT 68
5.5 EMC REQUIREMENTS 69
5.5.1 SELF-COMPATIBILITY 69
5.5.2 GROUNDING AND ISOLATION REQUIREMENTS 69
5.5.2.1 Power Interfaces 69

Questo doPDSmento contiene informazioni di proprietà di CARLO GAVAZZI SPACE SpA. Tutti i diritti sono riservati.
All information contained in this doPDSment are property of CARLO GAVAZZI SPACE SpA. All right reserved.

5.5.2.1.1 Primary Power Isolation ... 69
5.5.2.1.2 Primary power to secondary isolation ... 69
5.5.2.1.3 Secondary power grounding ... 69
5.5.2.2 Electrical Bonding ... 71
5.5.2.2.1 Bonding Requirements ... 71
5.5.2.2.2 Shielding Requirements ... 71
5.5.2.3 Electromagnetic Interference ... 71
5.5.2.3.1 Conducted Emissions ... 71
5.5.2.3.2 Conducted Susceptibility ... 71
5.5.2.4 Electrostatic Discharge ... 71

6. PRODUCT ASSURANCE REQUIREMENTS ... 72

6.1 SAFETY AND RELIABILITY REQUIREMENTS ... 72
6.1.1 FAILURE TOLERANCE DESIGN ... 72
6.1.2 FAILURE PROPAGATION ... 72
6.1.3 MECHANICAL REQUIREMENTS ... 72
6.1.3.1 Materials Design Allowables ... 72
6.1.3.2 Venting Provision ... 72
6.2 ELECTRICAL, ELECTRONIC, ELECTROMECHANICAL (EEE) PARTS ... 73
6.2.1 EEE COMPONENT ENGINEERING ... 73
6.2.1.1 COMPONENT Materials ... 73
6.2.1.2 Prohibited components ... 73
6.2.1.3 Radiation Requirements ... 73
6.2.1.3.1 Total Dose ... 73
6.2.1.4 EEE Component Selection ... 74
6.2.1.4.1 Preferred Components ... 74
6.2.1.4.2 Off-the shelf Components ... 74
6.2.1.4.3 Procurement Requirements ... 74
6.2.1.4.3.1 Procurement specification ... 74
6.2.1.4.3.2 Printed Circuit Board quality level ... 74
6.3 MATERIAL, MECHANICAL PARTS AND PROCESSES (PMP) ... 75
6.3.1 SELECTION AND APPROVAL ... 75
6.3.1.1 Selection of Material and Mechanical Part on basis of previous use ... 75
6.3.1.1.1.1 Stress Corrosion ... 75
6.3.1.1.1.2 Flammability ... 75
6.3.1.1.1.3 Outgassing ... 75
6.3.1.1.1.4 Thermal Cycling ... 75
6.3.1.1.1.5 Radiation ... 75
6.3.1.1.1.6 Atomic Oxygen ... 75

7. VERIFICATION REQUIREMENTS ... 76

7.1 GENERAL ... 76
7.1.1 TEST ... 76
7.1.2 ANALYSIS ... 76
7.1.3 REVIEW OF DESIGN ... 76
7.1.4 INSPECTION ... 77
7.2 VERIFICATION CONTROL DOCUMENT ... 77
7.3 VERIFICATION LEVEL ... 77

8. PREPARATION FOR DELIVERY ... 78

8.1 PDS TRANSPORT CONTAINER ... 78
8.1.1 CHARACTERISTICS ... 78
8.2 FLIGHT HARDWARE IDENTIFICATION MARKING ... 78
8.2.1 NAMEPLATES AND PRODUCT MARKING ... 78
8.2.1.1 Product Marking ... 78
8.2.1.2 Configuration item identification ... 78
8.2.1.3 Location ... 78
8.2.1.4 Marking techniques ... 79

Questo doPDSmento contiene informazioni di proprietà di CARLO GAVAZZI SPACE SpA. Tutti i diritti sono riservati.
All information contained in this doPDSment are property of CARLO GAVAZZI SPACE SpA. All right reserved.

8.2.1.5 Labelling 79
8.3 PACKAGING AND HANDLING 80
8.3.1 GENERAL 80
8.3.2 SEALING 80
8.3.2.1 Containers Labelling and Marking Data 81
8.4 HANDLING, TRANSPORTATION AND STORAGE 82
8.4.1 PROCEDURES/INSTRUCTIONS 82
8.4.2 TRANSPORTATION MODE 82
8.4.3 PROTECTION OF HARDWARE 82

Questo doPDSmento contiene informazioni di proprietà di CARLO GAVAZZI SPACE SpA. Tutti i diritti sono riservati.
All information contained in this doPDSment are property of CARLO GAVAZZI SPACE SpA. All right reserved.

LIST OF TABLES

Table 1: AMS02 Mission Phases 14
Table 2: PDS Dissipated Power Budget 16
Table 3: PDS Signal and Power Interfaces 21
Table 4: On board Measurements 23
Table 5: PDS Over-voltage Protection characteristics 28
Table 6: PDS 28Vdc Outlet protections characteristics 30
Table 7: CCEB Outlet protection characteristics 33
Table 8: On Board Temperature Measurement Requirements 38
Table 9: PDS input current characteristic 41
Table 10 (next page): Nominal PDS Output Power 48
Table 11: PDS Proto-qualification random vibration levels on the three axes 59
Table 12: PDS Thermal Environment 68

LIST OF FIGURES

Figure 1: PDS Block Diagram 11
Figure 2: PDS input stage block diagram 24
Figure 3: PDS thermal interlock circuit electrical connection 25
Figure 4: PDS 28Vdc Outlets Trip characteristics 30
Figure 5: CCEB Outlet Trip characteristics 32
Figure 6:PDS CAN BUS I/F General Architecture. 34
Figure 7: Peak surge current amplitude versus steady state input current 42
Figure 8:Maximum Input Voltage Ripple Susceptibility Limit 43
Figure 9: PDS Input Normal Voltage Transient 43
Figure 10: PDS Input Abnormal Voltage Transient 44
Figure 11:PDS Input Impedance Limits 46
Figure 12: Pulse applied to the PDS 47
Figure 13: 28Vdc Normal Transient 50
Figure 14: Voltage Transients for Abnormal Operations 28 VDC 52
Figure 15: PDS Base plate I/F 56
Figure 16: PDS overall Mechanical I/F 56
Figure 16: PDS Coordinate System 57
Figure 16: PDS Envelope 58
Figure 17: PDS Proto-qualification random vibration levels on the three axes 59
Figure 18: PDS Grounding and Isolation diagram 70

Questo doPDSmento contiene informazioni di proprietà di CARLO GAVAZZI SPACE SpA. Tutti i diritti sono riservati.
All information contained in this doPDSment are property of CARLO GAVAZZI SPACE SpA. All right reserved.

1. SCOPE

This specification establishes the requirements for the design, development, verification and delivery of the Power Distribution System PDS.

1.1 OVERALL CONCEPT

The PDS is the Power Distribution System for the AMS-02 payload and it is the power interface of the AMS System to ISS.
The PDS design, aimed at fulfilling the AMS-02 power requirements, is based on the proven building modules concept (also called "ESEM"), taking full advantage from the design heritage of Remote Power Distribution Assembly (RPDA) which is a power conversion and distribution unit for the International Space Station (ISS) with up to 6kW power handling capability. and 120V distribution and 120/28V conversion features.
The PDS unit is composed of two identical parts in cold redundant configuration. Each of the two sections includes the following electronic boards:

- N. 1 ESEM1-A board
- N. 4 PB2 boards
- N. 4 ESEM3-A boards
- N. 1 ESEM3-B boards
- N. 1 CAN bus I/F board

Additionally, each section are provided with the following boards:

- N. 1 input stage board (with EMI filter and current telemetry)
- N. 1 motherboard

The two sections are enclosed in a mechanical box which provides the unit housing; in addition to already mentioned boards, an additional "distribution board" located in the harness area is included to offer an easy power distribution method to common loads from the two power sections.

PDS also exchanges information (Command/telemetry) with JMDC via the CAN bus I/F.
Provision for on ground testing I/F and Shuttle supply is foreseen.

A block diagram of the PDS unit is provided in the following figure.

Questo doPDSmento contiene informazioni di proprietà di CARLO GAVAZZI SPACE SpA. Tutti i diritti sono riservati.
All information contained in this doPDSment are property of CARLO GAVAZZI SPACE SpA. All right reserved.

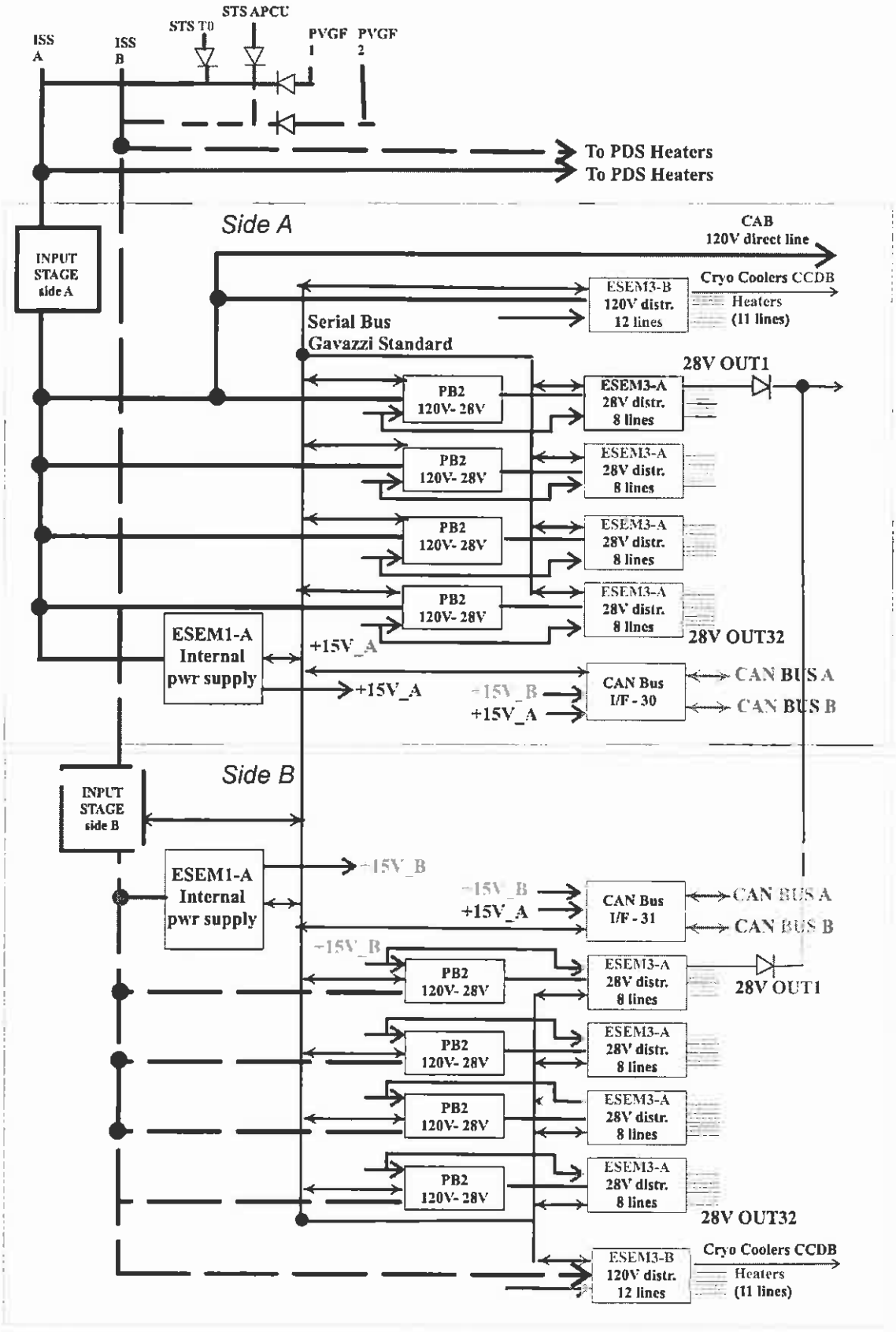

Figure 1: PDS Block Diagram

Questo doPDSmento contiene informazioni di proprietà di CARLO GAVAZZI SPACE SpA. Tutti i diritti sono riservati.
All information contained in this doPDSment are property of CARLO GAVAZZI SPACE SpA. All right reserved.

Each PDS section starts automatically its operations, after application of the 120Vdc power at the input connector and when the temperature experienced by PDS by means of thermostats is within the operative range. As soon as the 15V is generated all the boards are powered, by means of the internal DC/DC auxiliary converter, in a sort of stand by status. The secondary PDS power return lines are grounded to the PDS structure.
Depending on the AMS mission phase the PDS is supplied:

- *On the Space Shuttle* by STS T0 and APCU 120Vdc feeds when hosted in the STS Cargo-bay for the transportation phase
- *On the Robotic Arm to move AMS from the Space Shuttle to the ISS* by ISS SSRMS Arm 120Vdc A and B feeds when connected to the ISS Arm for the transfer phase;
- *On the ISS* by ISS 120Vdc A and B feeds when mounted in its final location on the ISS.

The ISS 120Vdc A feed, the ISS SSRMS A feed and the STS T0 feed are connected together inside the PDS and used to supply the PDS A section. Diodes are put in series on ISS SSRMS Arm and STS feeds to avoid that the 120V voltage coming from the ISS feed could be present on the PDS connectors dedicated to connect the ISS Arm and STS feeds. The ISS 120Vdc B feed, the ISS SSRMS B feed and the STS APPDS feed are connected together inside the PDS and used to supply the PDS B section. Diodes are put in series on ISS SSRMS Arm and STS feeds to avoid that the 120V voltage coming from the ISS feed could be present on the PDS connectors dedicated to connect the ISS Arm and STS feeds
For each PDS section, downstream the point of connection of the 120V input power feeds the following elements are inserted:

- a thermal interlock, to allow the PDS turning on only when the temperature experienced by PDS by means of thermostats is within the operative range
- an EMI filter, to satisfy the EMC requirements applicable to PDS
- an input telemetry stage, to monitor input current and voltage

Questo doPDSmento contiene informazioni di proprietà di CARLO GAVAZZI SPACE SpA. Tutti i diritti sono riservati.
All information contained in this doPDSment are property of CARLO GAVAZZI SPACE SpA. All right reserved.

2. DOCUMENTS

2.1 APPLICABLE DOCUMENTS

The documents listed here below are applicable to the present specification for the extent recalled on it:

#	Doc. Number	Issue / Date	Rev	Title / Applicability
AD1	SSP 57003	B / 17/06/03	-	Attached Payload Interface Requirement Document
AD2	AMS E-PPL	1 / November 01	-	AMS Electronics Preferred Parts List
AD3	USCM V03 / S3B	1.5 / May 2003	-	Universal Slow Control Module for AMS-II
AD4	JSC28792	D / March 2005	-	AMS 02 Structural Verification Plan for the Space Transportation System and the International Space Station
AD5	SSP 30237	F / 24/7/01 DCN-016 / 17/4/02	-	Space Station Electromagnetic Emission and Susceptibility Requirements

2.2 REFERENCE DOCUMENTS

#	Doc. Number	Issue / Date	Rev	Title / Applicability
RD1	NSTS 21000-IDD-ISS	A / 18/2/98 CPN 27 / 7/12/01	-	International Space Station Interface Definition Document

Questo doPDSmento contiene informazioni di proprietà di CARLO GAVAZZI SPACE SpA. Tutti i diritti sono riservati.
All information contained in this doPDSment are property of CARLO GAVAZZI SPACE SpA. All right reserved.

3. PDS REQUIREMENTS

3.1 OPERATIONAL REQUIREMENTS

3.1.1 MISSION PROFILE AND LIFE LIMITS

3.1.1.1 MISSION PHASES

[NA]

The PDS shall be designed to withstand the AMS02 mission phases listed in Table 1.

Mission Phase	AMS02 ACCOMMODATION	Electrical Power Status
Transportation from/to ISS (launch and retrieval)	Mounted NSTS cargo bay	No power
AMS02 in the NSTS Cargo Payload Bay with doors open on launch PAD	Still in NSTS cargo bay	AMS02 is powered by STS T0 120Vdc feed when hosted in the STS Cargo-bay for pre-launch verification phase
AMS02 in the NSTS Cargo Payload Bay with doors open on flight	Still in NSTS cargo bay	AMS02 is powered by STS APCU 120Vdc feed when hosted in the STS Cargo-bay for the transportation phase
Transportation: • from/to NSTS from/to AMS02 final location on ISS (Truss S3)	On the Robotic Arm	AMS02 is powered by ISS SSRMS Arm 120Vdc A and B feeds
AMS02 on Truss S3	on Truss S3	by ISS 120Vdc A and B feeds

Table 1: AMS02 Mission Phases

3.1.1.2 ON-ORBIT LIFE TIME

[R]

The PDS shall be designed to withstand on-orbit operations providing the requested performance for 3 years

3.1.1.3 STORAGE

[R]

The PDS shall be designed to withstand a storage time of 3 years.

Questo doPDSmento contiene informazioni di proprietà di CARLO GAVAZZI SPACE SpA. Tutti i diritti sono riservati.
All information contained in this doPDSment are property of CARLO GAVAZZI SPACE SpA. All right reserved.

3.2 FUNCTIONAL AND PHYSICAL CHARACTERISTICS

3.2.1 PDS FUNCTIONALITY AND PERFORMANCE

3.2.1.1 OPERATIONAL CONDITIONS

[R]

The PDS shall be designed to support the following operative conditions:

- Power Off during launch, re-entry
- Switch on in the Orbiter Cargo Bay with open doors achieved with STS APCU 120Vdc feed providing power to PDS electronics to keep the payload above the minimum temperature and allow un-powered transfer to the ISS SSRMS Arm
- Switch on during transfer to the ISS Truss S3 achieved with ISS SSRMS Arm 120Vdc A and B feeds
- On-orbit nominal operational mode, achieved with 120V input power Feed A and B providing nominal power to PDS electronics

3.2.1.2 STAY-ALIVE IN NSTS CARGO BAY

[R/A]

In this phase the PDS shall use the 120VDC electrical power provided by the Orbiter (STS APCU120Vdc feed) to keep its temperature above its minimum allowed value. No payload operations are allowed.

3.2.1.3 TRANSFER FROM ISS SSRMS ARM TO ITS LOCATION ON ISS TRUSS S3

[R/A]

During the transfer phase from ISS SSRMS Arm to its location on ISS Truss S3, the PDS shall use the ISS SSRMS Arm 120Vdc A and B feeds to keep its temperature within its survival/minimum switch-on temperature range.

Questo doPDSmento contiene informazioni di proprietà di CARLO GAVAZZI SPACE SpA. Tutti i diritti sono riservati.
All information contained in this doPDSment are property of CARLO GAVAZZI SPACE SpA. All right reserved.

3.2.1.4 ON-ORBIT NOMINAL OPERATIVE MODE

[R/A]

During On Orbit nominal operative mode, the PDS shall use the power from the ISS 120V input power Feed A and B in order to reach and keep its nominal temperature and operate according to the characteristics defined in this document.

3.2.1.5 POWER PROVIDED TO PDS A-SECTION

[R]

The ISS 120Vdc A feed, the ISS SSRMS A feed and the STS T0 feed shall be connected together inside the PDS and used to supply the PDS A section. Diodes shall be put in series on ISS SSRMS Arm and STS feeds to avoid that the 120V voltage coming from the ISS feed could be present on the PDS connectors dedicated to connect the ISS Arm and STS feeds.

3.2.1.6 POWER PROVIDED TO PDS B-SECTION

[R]

The ISS 120Vdc B feed, the ISS SSRMS B feed and the STS APCU feed shall be connected together inside the PDS and used to supply the PDS B section. Diodes shall be put in series on ISS SSRMS Arm and STS feeds to avoid that the 120V voltage coming from the ISS feed could be present on the PDS connectors dedicated to connect the ISS Arm and STS feeds

3.2.1.7 PDS DISSIPATED POWER BUDGET

[R/T]

One PDS section shall not exceed the PDS dissipated power budget specified in Table 2.

PDS DISSIPATED POWER BUDGET	
Nominal case	333W
Worst case	365W

Table 2: PDS Dissipated Power Budget

Questo doPDSmento contiene informazioni di proprietà di CARLO GAVAZZI SPACE SpA. Tutti i diritti sono riservati.
All information contained in this doPDSment are property of CARLO GAVAZZI SPACE SpA. All right reserved.

3.2.1.8 POWER-UP

[R/T]

Each PDS section shall start automatically its operations, after application of the 120Vdc power at the input connector and when the temperature experienced by PDS is within the operative range by means of a thermal interlock circuit implemented with thermostats (see section 3.2.2.1)

3.2.1.9 PDS REDUNCANCY

[R/T]

Each PDS section shall be supplied by one feed and shall be completely independent by the other section, with the exception of the CAN Bus interfaces, which shall be able to receive power by both internal power supply board to guarantee the interface functions of both sections even when only one feed is turned on

3.2.1.10 PDS ELECTRICAL REDUNCANCY PERFORMANCE

[R/T]

The two PDS section shall be able to be turned on together (drawing power from both feeds simultaneously) to implement a hot redundancy.

Note: for thermal constraints, the PDS total power dissipated shall not exceed the one specified in Table 2

Questo doPDSmento contiene informazioni di proprietà di CARLO GAVAZZI SPACE SpA. Tutti i diritti sono riservati.
All information contained in this doPDSment are property of CARLO GAVAZZI SPACE SpA. All right reserved.

3.2.1.11 POWER CONVERSION AND DISTRIBUTION

[R]

The PDS shall be designed to convert and distribute power both internally to PDS and externally to AMS-02 according to the schematic of Figure 1.

PDS shall provide the following capabilities:

- To manage 3 Inputs Power Busses at 120V:
  - ISS PWR input
  - STS PWR input
  - SSRMS PWR input
- To guarantee the EMI requirement compatibility
- To distribute the protected 120V
- To convert the 120V input to 28V
- To distribute the protected 28V
- To generate the internal auxiliary voltage (+ 15V)
- To allow a remote Control and Monitoring of the main unit parameters

3.2.1.11.1 120VDC TO CCS/CAB

[R/T]

The PDS shall distribute the 120Vdc power to the Cryomagnet Current Source (CCS) located in the Cryomagnet Avionics Box (CAB)
This distribution shall be performed by means of a dedicated feed coming from the PDS section A (after Input Filter) directly supplied by the 120Vdc input feed without any kind of protection

3.2.1.11.2 120VDC TO CCS/CAB CHARACTERISTICS

[R]

The feed dedicated to the CCS/CAB supply shall be not separately switchable and not separately monitored

3.2.1.11.3 120VDC TO CCS/CAB GALVANIC ISOLATION

[R]

Since the feed dedicated to the CCS/CAB supply shall be directly connected to the input 120Vdc feed, no galvanic isolation shall be implemented between input and output feeds

Questo doPDSmento contiene informazioni di proprietà di CARLO GAVAZZI SPACE SpA. Tutti i diritti sono riservati.
All information contained in this doPDSment are property of CARLO GAVAZZI SPACE SpA. All right reserved.

3.2.1.12 POWER BOARDS COMMANDING AND ACQUISITION

3.2.1.12.1 COMMAND/MONITOR INTERFACE

[R]

Each PDS section shall implement an interface via CAN bus with JMDC [J-Crate] controllers for PDS control/monitoring and telemetry acquisition (see relevant section for details)

Questo doPDSmento contiene informazioni di proprietà di CARLO GAVAZZI SPACE SpA. Tutti i diritti sono riservati.
All information contained in this doPDSment are property of CARLO GAVAZZI SPACE SpA. All right reserved.

3.2.1.13 PDS SIGNAL AND POWER INTERFACES

[R/T]

PDS shall provide the signal and power interfaces specified in Table 3

PDS SIGNAL & POWER INTERFACES		
INPUT SECTION		
I/F type	**Description**	**Source**
Power I/F	• 120V Feeder A • 120V Feeder B	ISS
	• 120V Feeder APCU • 120V Feeder T0	STS
	• 120V Feeder SSRMS 1 • 120V Feeder SSRMS 2	BCS (SSRMS)
OUTPUT SECTION		
I/F type	**Description**	**Source**
Power I/F	15V Internal Power Supply	ESEM1-A
	120V Feeder to CCS in CAB	DIRECT OUTPUT
	• OUT 1 for AMS heaters • OUT 2 for AMS heaters • OUT 3 for AMS heaters • OUT 4 for AMS heaters • OUT 5 for AMS heaters • OUT 6 for AMS heaters • OUT 7 for AMS heaters • OUT 8 for AMS heaters • OUT 9 for AMS heaters • OUT 10 for AMS heaters • OUT 11 for AMS heaters • OUT 12 CCEB (Cryocoolers)	ESEM3-B
	28V OUTPUT to the ESEM 3-A distribution board	PB2
	8 x 28V output lines	ESEM3-A
Signal I/F	• INPUT CURRENT • INPUT VOLTAGE	INPUT TELEMETRY
	• ON/OFF DC/DC CONVERTER • DIGITAL Board Status Monitoring • OK/NOK • OVERTEMP • DC/DC 1 OVERCURRENT • DC/DC 2 OVERCURRENT • DC/DC 1 MAIN ON/OFF • DC/DC 2 MAIN ON/OFF • MAIN POWER ON • DIGITAL TEST OUT • ANALOGUE Board Monitoring • TEMPERATURE • ANALOG REFERENCE VOLTAGE • MAIN POWER VOLTAGE	ESEM1-A

Questo doPDSmento contiene informazioni di proprietà di CARLO GAVAZZI SPACE SpA. Tutti i diritti sono riservati.
All information contained in this doPDSment are property of CARLO GAVAZZI SPACE SpA. All right reserved.

PDS SIGNAL & POWER INTERFACES		
	• ON/OFF OUTLET Command • DIGITAL Board Status Monitoring • OK/NOK • OVERTEMP • OUTLET STATUS (ON/OFF) • OUTLET TRIP STATUS (only for CCEB line) • ANALOGUE Board Monitoring • TEMPERATURE • OUTLET CURRENT (only for the CCEB line) • ANALOG REFERENCE VOLTAGE	ESEM3-B

	• ON/OFF DC/DC CONVERTER Command
	• DIGITAL Board Status Monitoring
	• OK/NOK
	• OVERTEMP
	• DC/DC CONVERTER STATUS (ON/OFF)
	• INPUT OVERCURRENT
	• OUTPUT OVERVOLTAGE
	• ANALOGUE Board Monitoring
	  • TEMPERATURE
	  • 28V OUTPUT VOLTAGE
	  • ANALOG REFERENCE VOLTAGE
		PB2

	• ON/OFF OUTLET Command • DIGITAL Board Status Monitoring • OK/NOK • OVERTEMP • OUTLET STATUS (ON/OFF) • OUTLET TRIP STATUS • ANALOGUE Board Monitoring • TEMPERATURE • OUTLETS CURRENT • ANALOG REFERENCE VOLTAGE	ESEM3-A
	• CAN BUS I/F • PDS INTERNAL BUS I/F • DIGITAL Command to the boards • ANALOGUE ACQUISITIONS of the boards telemetry • DIGITAL ACQUISITIONS of the boards status	CANBUS I/F

Table 3: PDS Signal and Power Interfaces

Questo doPDSmento contiene informazioni di proprietà di CARLO GAVAZZI SPACE SpA. Tutti i diritti sono riservati.
All information contained in this doPDSment are property of CARLO GAVAZZI SPACE SpA. All right reserved.

3.2.1.14 PROTECTIONS ON POWER SUPPLY LINES

3.2.1.14.1 GENERAL

[R,T]

The protections on PDS power supplies are introduced to avoid failure propagation. A protection is defined as a circuit that monitors a voltage or a current and opens the relevant current-breaker switch.

When the protection has triggered the switch shall be kept OPEN and the status of the failing line shall be kept flagged (e.g. over-current flag is set).

Current-breaker switches shall provide the possibility to reset the protection condition and retry the switch-on.

3.2.1.14.2 TRIP COORDINATION

[R/T]

PDS shall be designed to provide trip co-ordination, i.e. the downstream protection shall disconnect a short circuit or an overload circuit prior to the tripping of the upstream protection.

3.2.1.14.3 OVER-TEMPERATURE PROTECTION

[R/T]

The PDS boards, except for CAN BUS Interface, shall provide an over-temperature protection to switch off automatically the boards themselves when the components of the board, that are more thermally stressed, reach a dangerous temperature threshold. The definition of the threshold shall to be evaluated by thermal analysis of the PDS board(s).

Note: test to be performed in indirect way by measuring the protection threshold

Questo doPDSmento contiene informazioni di proprietà di CARLO GAVAZZI SPACE SpA. Tutti i diritti sono riservati.
All information contained in this doPDSment are property of CARLO GAVAZZI SPACE SpA. All right reserved.

3.2.1.14.4 ON BOARD MEASUREMENTS

[R/T]

The on board measurements defined in Table 4 shall be allowed to the ASW via internal serial I/F to the CANBUS Module. Accuracy of measurements shall be 3% FS

Signals		Monitored Range
Temperatures	ESEM1-A	-40°C ÷ +90°C
	PB2	-40°C ÷ +90°C
	ESEM3-A	-40°C ÷ +90°C
	ESEM3-B	-40°C ÷ +90°C
ESEM1-A	Analog Reference Voltage	~4V
	Main Power Voltage	0V ÷ 150V
	Temperature	-40°C ÷ +90°C
PB2	+28V Output Voltage	0V ÷ 36.76V
	Analog Reference Voltage	~2V
	Temperature	-40°C ÷ +90°C
ESEM3-A	Outlet #1 Current (rated 5A)	0A ÷ 7.5A
	Outlet #2 Current (rated 5A)	0A ÷ 7.5A
	Outlet #3 Current (rated 5A)	0A ÷ 7.5A
	Outlet #4 Current (rated 5A)	0A ÷ 7.5A
	Outlet #5 Current (rated 5A)	0A ÷ 7.5A
	Outlet #6 Current (rated 5A)	0A ÷ 7.5A
	Outlet #7 Current (rated 5A)	0A ÷ 7.5A
	Outlet #8 Current (rated 10A)	0A ÷ 15A
	Analog Reference Voltage	~3V
	Temperature	-40°C ÷ +90°C
ESEM3-B	Outlet #12 Current (rated 10A)	0A ÷ 15A
	Analog Reference Voltage	~2.5V
	Temperature	-40°C ÷ +90°C

Table 4: On board Measurements

Questo doPDSmento contiene informazioni di proprietà di CARLO GAVAZZI SPACE SpA. Tutti i diritti sono riservati.
All information contained in this doPDSment are property of CARLO GAVAZZI SPACE SpA. All right reserved.

3.2.2 PDS INPUT STAGE

[R]

The PDS Input Stage shall be composed by the following functional components:

- Input diodes section
- Thermal interlock circuit
- EMI filter
- Input telemetry section

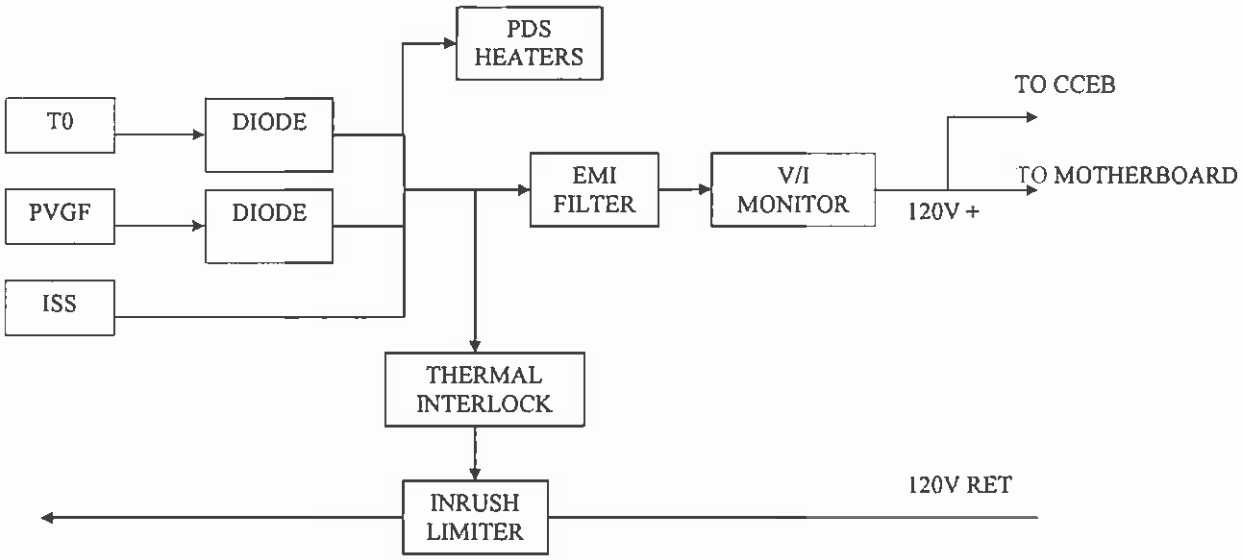

Figure 2: PDS input stage block diagram

Questo doPDSmento contiene informazioni di proprietà di CARLO GAVAZZI SPACE SpA. Tutti i diritti sono riservati.
All information contained in this doPDSment are property of CARLO GAVAZZI SPACE SpA. All right reserved.

3.2.2.1 PDS THERMAL INTER-LOCK

[R/T]

The Thermal Inter-lock circuit shall allow the PDS turning on only when the temperature sensed by PDS itself is within the operative range

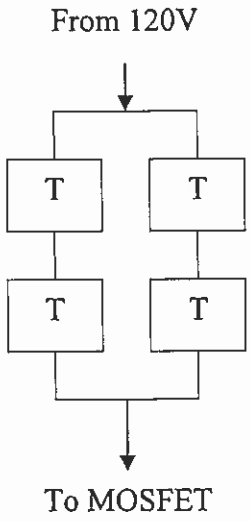

Figure 3: PDS thermal interlock circuit electrical connection

3.2.2.2 PDS EMI FILTER INPUT IMPEDANCE

[R/T]

The EMI filter input impedance – when loaded by the AMS PDS electronics – shall be comply with the impedance requirements reported in Figure 11

3.2.2.2.1 PDS EMI FILTER INPUT INRUSH CURRENT

[R/T]

PDS shall provide an Inrush Current Control circuit that shall operate during power ON.

Questo doPDSmento contiene informazioni di proprietà di CARLO GAVAZZI SPACE SpA. Tutti i diritti sono riservati.
All information contained in this doPDSment are property of CARLO GAVAZZI SPACE SpA. All right reserved.

3.2.2.3 PDS INPUT TELEMETRY SECTION

[R]

The PDS shall monitor the input current flowing into the PDS unit (except for he PDS heaters current) and the input voltage value.

3.2.2.3.1 PDS CURRENT MONITOR ACCURACY

[R/T]

The current monitor shall have an accuracy better than ±5% of Full Scale.

3.2.2.3.2 PDS VOLTAGE MONITOR ACCURACY

[R/T]

The voltage monitor shall have an accuracy better than ±5% of Full Scale.

Questo doPDSmento contiene informazioni di proprietà di CARLO GAVAZZI SPACE SpA. Tutti i diritti sono riservati.
All information contained in this doPDSment are property of CARLO GAVAZZI SPACE SpA. All right reserved.

3.2.3 PDS 28V OUTPUT

3.2.3.1 GENERAL

[R/T]

The PDS shall provide 32 switchable and independent outputs @ 28Vdc for each section
Each 28Vdc outlet of one PDS section shall be "OR-ed" with the corresponding outlet of the other PDS section.

3.2.3.2 PDS 28V OUTPUT CHARACTERISTICS

[R/T]

The PDS 120V to 28V DCDC Converter shall be provided with a current capability of 20A @ 28Vdc.

The PDS Secondary output voltage shall be 28Vdc ± 1V; for its characteristics see section 4.1.5.3

3.2.3.3 PDS DC/DC CONVERTER PRIMARY TO SECONDARY ISOLATION

[R]

The PDS shall guarantee galvanic isolation between the primary input side (@120Vdc) and the generated secondary power (@28Vdc).

3.2.3.4 PDS 28VDC OUTLETS VOLTAGE MONITOR

[R/T]

PDS shall foresee an 28Vdc outlets voltage monitor in the 0 ÷ 4096 LSB telemetry range for maximum 130% of nominal value
The measurement accuracy shall be less than 3% of FS.

Questo doPDSmento contiene informazioni di proprietà di CARLO GAVAZZI SPACE SpA. Tutti i diritti sono riservati.
All information contained in this doPDSment are property of CARLO GAVAZZI SPACE SpA. All right reserved.

3.2.3.5 PDS 28VDC OUTLETS OVER-VOLTAGE PROTECTION

[R/T]

PDS shall foresee an outlet over-voltage protection and its threshold shall be set in the 32.76 ÷ 34.44V range.
When the protection trips, the 120V to 28V DC/DC converter shall be shut-down and the outlets shall be switched-off. The NOT OK status shall be provided to CAN BUS Interface.
The protection shall be latched and it shall be removed by switching OFF/ON the auxiliary power
The PDS over-voltage protection characteristics are summarized in Table 5

Protection		Limit	Reset Procedure
28V Over-voltage	threshold voltage	32.76 ÷ 34.44V	Switching-OFF/ON cycle of the auxiliary power
	time before intervention	< 2ms (voltage step from 28V to 36V)	

Table 5: PDS Over-voltage Protection characteristics

3.2.3.6 PDS 28V OUTLET CURRENT RATINGS

[R/T]

PDS shall provide outlet @28Vdc with the following current ratings:

- #28 outlets @ 5A
- #4 outlets @ 10A

3.2.3.7 PDS 28V OUTLET CURRENT MONITOR

[R/T]

PDS shall foresee a 28Vdc outlet current monitor in the 0 ÷ 4096 LSB telemetry range for maximum 150% of nominal value.
The measurement accuracy shall be less than 3% of FS.

Questo doPDSmento contiene informazioni di proprietà di CARLO GAVAZZI SPACE SpA. Tutti i diritti sono riservati.
All information contained in this doPDSment are property of CARLO GAVAZZI SPACE SpA. All right reserved.

3.2.3.8 PDS 28V OUTLET OVER CURRENT PROTECTIONS

[R/T]

The PDS secondary power outlets shall be protected by over-current protections devices against overload.

The active protections devices shall trip when the supplied current exceeds the 130% ± 10% of maximum operating current after a current limitation for a time between 5ms and 6 ms. After the limiting time, the protection shall trip switching off the correspond outlet. The protection shall be latched and shall be reset only by switching OFF/ON the tripped outlet.

The outlet over-current protection shall be in accordance with Figure 4 and Table 6

Trip coordination with upstream protections shall be guaranteed by a combining the limitation the maximum current at the primary inputs with short trip times.

Questo doPDSmento contiene informazioni di proprietà di CARLO GAVAZZI SPACE SpA. Tutti i diritti sono riservati.
All information contained in this doPDSment are property of CARLO GAVAZZI SPACE SpA. All right reserved.

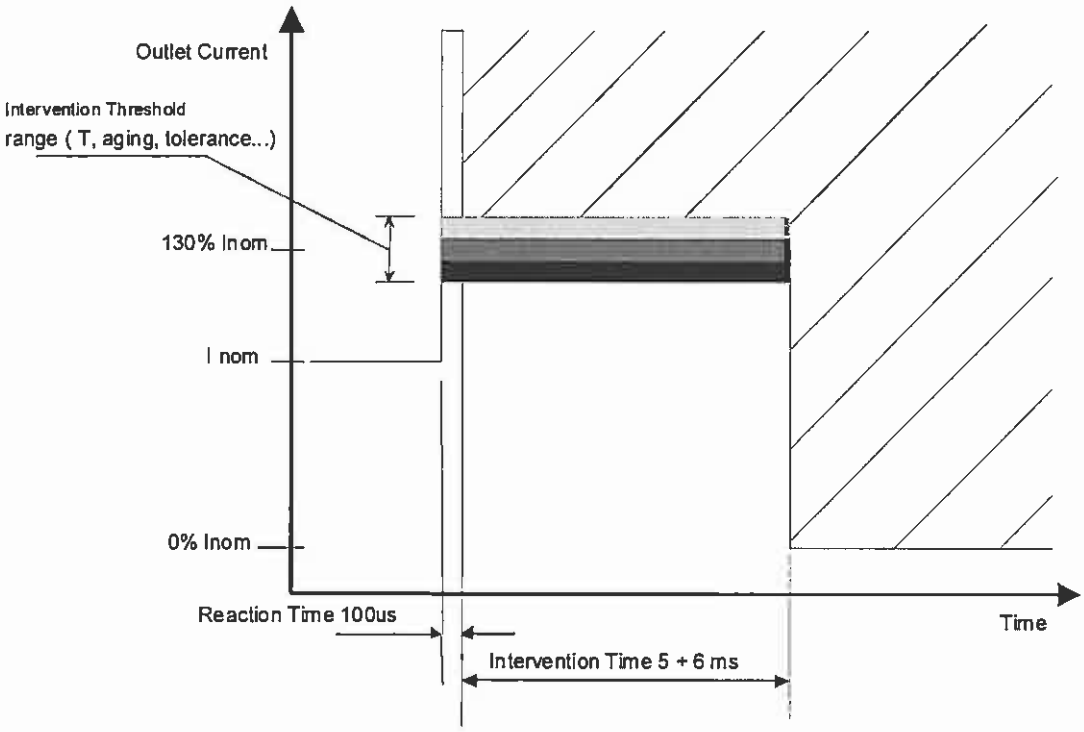

Figure 4: PDS 28Vdc Outlets Trip characteristics

Protection		Limit	Reset Procedure
Outlet Over-current	threshold current	130±10% of nominal current	Turning-OFF/ON cycle of the failed outlet
	time before intervention	5 ÷ 6ms (reaction time lower that 100μs)	

Table 6: PDS 28Vdc Outlet protections characteristics

Questo doPDSmento contiene informazioni di proprietà di CARLO GAVAZZI SPACE SpA. Tutti i diritti sono riservati.
All information contained in this doPDSment are property of CARLO GAVAZZI SPACE SpA. All right reserved.

3.2.4 PDS 120V OUTPUT

3.2.4.1 GENERAL

[R]

The PDS shall provide 12 switchable and independent outputs @ 120Vdc for each section

The 12 outlets that shall be independently:

- equipped for ON/OFF switching;
- protected by fuse is series with switch except for the CCEB outlet where current limiter circuit shall be used
- provided with status monitor circuitry
- for the CCEB outlet a current telemetry circuit shall be added

3.2.4.2 PDS 120V OUTLET OUTPUT VOLTAGE

[R/T]

Each PDS 120Vdc outlet shall provide an output voltage depending on the MAIN power bus voltage range (see section 4.1.4.1 for details) with a voltage drop of each PDS 120Vdc outlet that shall not exceed 1Vdc

When turned OFF the output voltage shall be ≤ 5V.

3.2.4.3 PDS 120V OUTLET OUTPUT GALVANIC ISOLATION

[R]

Since PDS 120Vdc outlet shall be supplied directly by the input 120Vdc feed, no galvanic isolation shall be implemented between input and output feeds

3.2.4.4 PDS 120V OUTLET CURRENT MONITOR

[R/T]

The CCEB outlet shall foresee an outlet current monitor: it shall be in the 0 ÷ 4096 LSB telemetry range for maximum 150% of nominal value.
The measurement accuracy shall be less than 3% of FS.

Questo doPDSmento contiene informazioni di proprietà di CARLO GAVAZZI SPACE SpA. Tutti i diritti sono riservati.
All information contained in this doPDSment are property of CARLO GAVAZZI SPACE SpA. All right reserved.

3.2.4.5 PDS 120V OUTLET OUTPUT PROTECTION

[R/T]

Each PDS 120V outlet shall be provided with current protection.
Except for the CCEB outlet, a fuse in series with switch shall open the power line in case of load over current. This protection shall not be re-settable.

3.2.4.6 CCEB OUTLET CURRENT LIMITER AND OVER-CURRENT PROTECTION

[R/T]

CCEB outlet shall provide a current limiter and an over-current protection.
The current limiter circuit shall provide a current limitation for a time between 5ms and 10ms and the current shall be limited at the 130% ± 10% of the nominal value. (see Figure 5 and Table 7 as reference)
After the limiting time, the protection shall trip switching off the outlet. The protection shall be latched and shall be reset only by switching OFF/ON the tripped outlet.

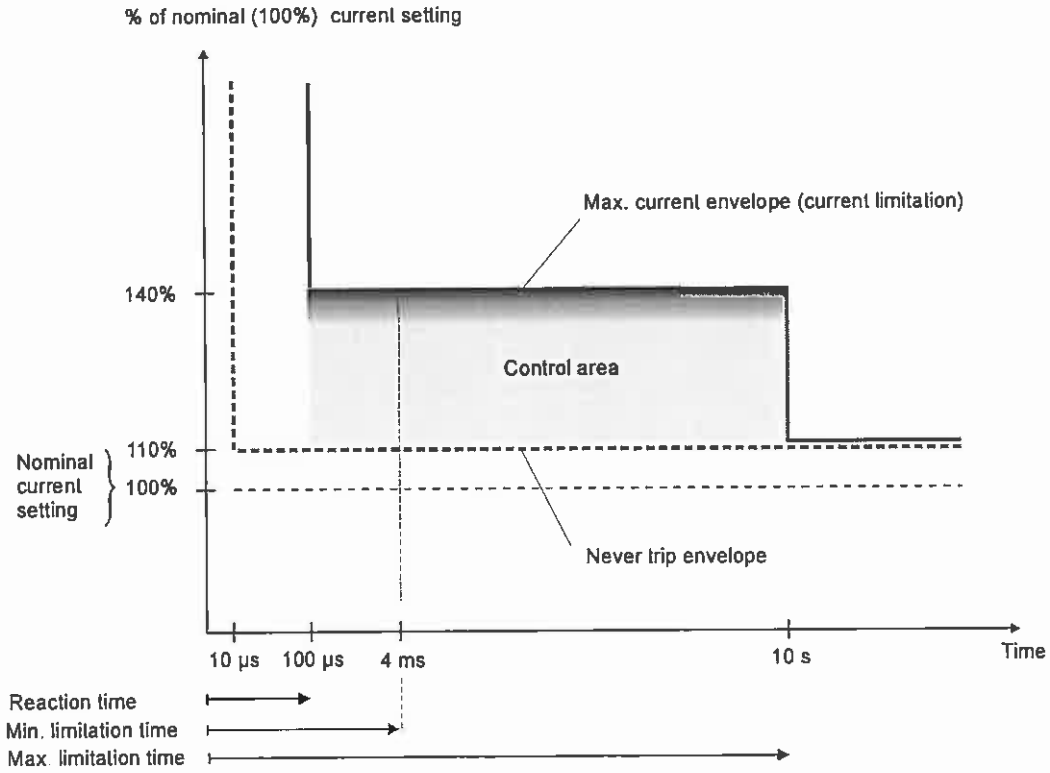

Figure 5: CCEB Outlet Trip characteristics

Questo doPDSmento contiene informazioni di proprietà di CARLO GAVAZZI SPACE SpA. Tutti i diritti sono riservati.
All information contained in this doPDSment are property of CARLO GAVAZZI SPACE SpA. All right reserved.

Protection		Limit	Reset Procedure
CCEB Outlet Over-current	threshold current	130±10% of nominal current	Turning-OFF/ON cycle of the failed outlet
	time before intervention	5 ÷ 10ms	

Table 7: CCEB Outlet protection characteristics

3.2.4.7 PDS CCEB OUTLET CURRENT MONITOR

[R/T]

PDS CCEB outlet shall foresee a current monitor in the 0 ÷ 4096 LSB telemetry range for maximum 150% of nominal value.
The measurement accuracy shall be less than 3% of FS

Questo doPDSmento contiene informazioni di proprietà di CARLO GAVAZZI SPACE SpA. Tutti i diritti sono riservati.
All information contained in this doPDSment are property of CARLO GAVAZZI SPACE SpA. All right reserved.

3.2.5 PDS INTERFACE WITH AMS (CAN BUS INTERFACE)

3.2.5.1 GENERAL

[R]

The PDS CAN BUS I/F shall be based on the USCM designs (see AD[3] for details) to facilitate compliance with the AMS CAN Protocol.

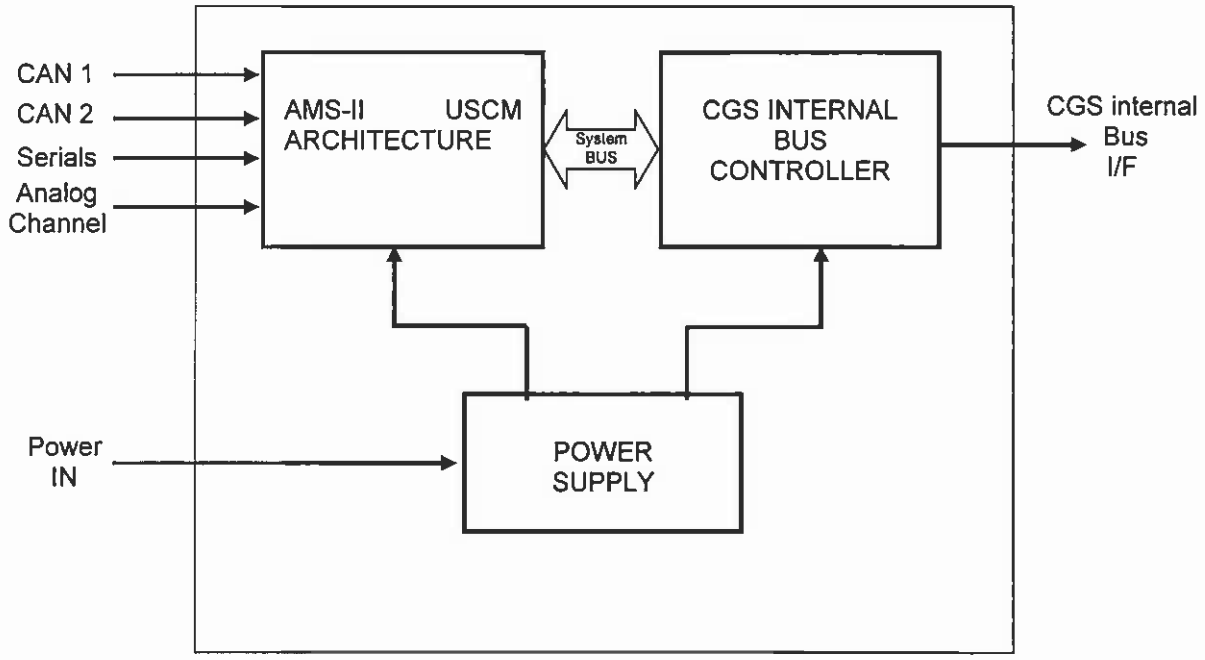

Figure 6:PDS CAN BUS I/F General Architecture.

The CAN BUS I/F shall be connected to the dual AMS CAN bus and shall support data and command communication through dedicate Interface with the rest of the PDS.

Questo doPDSmento contiene informazioni di proprietà di CARLO GAVAZZI SPACE SpA. Tutti i diritti sono riservati.
All information contained in this doPDSment are property of CARLO GAVAZZI SPACE SpA. All right reserved.

3.2.5.2 CAN BUS INTERFACE SOFTWARE

[R]

The PDS CAN BUS Interface shall be commanded by a Software developed in the frame of AMS-02 USCM and detailed in AD[3]

3.2.5.3 CAN BUS INTERFACE HW/SW COMPATIBILITY

[R]

The Hardware implementation of the CAN BUS Interface shall be compatible with the Software developed in the frame of AMS-02 USCM.
Since the microcontroller DS80C390QNR release B4 is necessary to guarantee this compatibility, this kind of component shall be used to implement the CAN BUS Interface HW

3.2.5.4 ANALOG INPUT

[R/T]

The CAN BUS I/F shall acquire analogue telemetry coming from each PDS board to be forwarded to the control centre.

3.2.5.5 REDUNDANCY

[R/T]

The PDS shall contain 2 CAN BUS I/F acting in hot redundancy.

Questo doPDSmento contiene informazioni di proprietà di CARLO GAVAZZI SPACE SpA. Tutti i diritti sono riservati.
All information contained in this doPDSment are property of CARLO GAVAZZI SPACE SpA. All right reserved.

3.2.6 PDS CONTROL LOGIC

[R/T]

The PDS Control Logic shall consist of the digital controls and interfaces circuits.
The module shall be remotely controlled/commanded via the CAN BUS I/F.
During normal operation the CAN BUS I/F shall allow to:

- read the boards digital status flags
- power ON/OFF the DC-DC converters
- power ON/OFF the PDS outlets (both @28V and @120V)
- write the command flags
- request analogue voltages on the power bus
- perform digital and analogue tests of the board.

3.2.6.1 GLOBAL SWITCH OFF CAPABILITY

[R/T]

PDS shall provide a Global Switch off capability: Global_Switch_Off command (given by means of CANBUS I/F) shall switch off the DC/DC converters and consequently all the other boards.
This command shall be latched and shall be reset only by removing the MAIN power bus

Questo doPDSmento contiene informazioni di proprietà di CARLO GAVAZZI SPACE SpA. Tutti i diritti sono riservati.
All information contained in this doPDSment are property of CARLO GAVAZZI SPACE SpA. All right reserved.

3.2.7 THERMAL CONTROL

3.2.7.1 THERMAL CONTROL GENERAL CONCEPT

[R]

PDS Thermal Control is achieved by proper passive dissipation of on-board producing heat in hot environmental conditions

.

3.2.7.2 HEAT DISSIPATION

[R]

All the PDS elements, sections and components shall be conduction cooled.

The PDS heat dissipation shall be based on conduction to AMS02 Wake Radiator

3.2.7.2.1 ARCHITECTURE

[R]

The lines dedicated to heaters shall be independent from PDS on/off phases so they shall be in parallel to the thermal interlock PDS circuit.

3.2.7.2.2 CIRCUIT PROTECTIONS

[R]

The lines dedicated to heaters shall be protected by means of fuses.

They shall be the P600L fuse type

Questo doPDSmento contiene informazioni di proprietà di CARLO GAVAZZI SPACE SpA. Tutti i diritti sono riservati.
All information contained in this doPDSment are property of CARLO GAVAZZI SPACE SpA. All right reserved.

3.2.7.2.3 THERMAL INTERLOCK THERMOSTATS

[R]

The PDS thermal interlock thermostats shall be the following:

- P/N: G311P641/03706S
- Manufacturer: Honeywell

3.2.7.3 TEMPERATURE SENSORS ACQUIRED INTERNALLY OF PDS

[R/T]

By means of CANBUS I/F Board, the PDS shall acquire temperature sensors defined in

Source	Temperature sensor type	qty	Measurement Accuracy	Temperature Range
Internal to PDS (each section)				
ESEM1-A	IC sensor	1	+/- 2°C	(–40°C to +90°C)
PB2_1	IC sensor	1	+/- 2°C	(–40°C to +90°C)
PB2_2	IC sensor	1	+/- 2°C	(–40°C to +90°C)
PB2_3	IC sensor	1	+/- 2°C	(–40°C to +90°C)
PB2_4	IC sensor	1	+/- 2°C	(–40°C to +90°C)
ESEM3-A_1	IC sensor	1	+/- 2°C	(–40°C to +90°C)
ESEM3-A_2	IC sensor	1	+/- 2°C	(–40°C to +90°C)
ESEM3-A_3	IC sensor	1	+/- 2°C	(–40°C to +90°C)
ESEM3-A_4	IC sensor	1	+/- 2°C	(–40°C to +90°C)
ESEM3-B	IC sensor	1	+/- 2°C	(–40°C to +90°C)

Table 8: On Board Temperature Measurement Requirements

Questo doPDSmento contiene informazioni di proprietà di CARLO GAVAZZI SPACE SpA. Tutti i diritti sono riservati.
All information contained in this doPDSment are property of CARLO GAVAZZI SPACE SpA. All right reserved.

3.2.7.4 THERMAL INTERFACE CONSTRAINTS

[R/A/T]

The PDS shall meet the applicable temperature requirement, in the specified environment, while dissipating the amounts of power specified in Table 10.

	COLD CASE	HOT CASE
PDS Power dissipation [W]	Minimum nominal Power delivered to Subsystem / Instruments (2024W, see Table 10) PDS Power dissipation: < 180W	Maximum nominal Power delivered to Subsystem / Instruments (2028W, see Table 10) PDS Power dissipation: < 333W

Questo doPDSmento contiene informazioni di proprietà di CARLO GAVAZZI SPACE SpA. Tutti i diritti sono riservati.
All information contained in this doPDSment are property of CARLO GAVAZZI SPACE SpA. All right reserved.

4. INTERFACE REQUIREMENTS

4.1 ELECTRICAL INTERFACE REQUIREMENTS

4.1.1 DEFINITION

[NA]

The PDS electrical interfaces are divided in two groups:

- On-board external interfaces:
    - To STS
    - To SSRMS
    - To ISS
- On-board internal interfaces to AMS02 subsystems/Instruments

4.1.2 ON-BOARD EXTERNAL INTERFACE DEFINITION

4.1.2.1 STS INTERFACES

[R]

PDS shall provide the following external interfaces to STS:

- 120Vdc T0 and APCU feeds providing 120Vdc nominal operational power for the two PDS sections.

4.1.2.2 SSRMS INTERFACES

[R]

PDS shall provide the following external interfaces to SSRMS:

- 120Vdc A and B feeds providing 120Vdc nominal operational power for the two PDS sections.

4.1.2.3 ISS INTERFACES

[R]

PDS shall provide the following external interfaces to ISS:

- 120Vdc A and B feeds providing 120Vdc nominal operational power for the two PDS sections.

Questo doPDSmento contiene informazioni di proprietà di CARLO GAVAZZI SPACE SpA. Tutti i diritti sono riservati.
All information contained in this doPDSment are property of CARLO GAVAZZI SPACE SpA. All right reserved.

4.1.3 ON-BOARD INTERNAL INTERFACE DEFINITION

4.1.3.1 AMS02 SUBSYSTEMS / INSTRUMENTS INTERFACES

[R]

PDS shall provide the following external interfaces to Subsystems / Instruments:

- 28Vdc Operational Power Supply
- 120Vdc Heaters Power Supply
- CAN BUS Interface to be managed by AMS02 payload on board computer (J-Crate)

4.1.4 INPUT POWER INTERFACE REQUIREMENTS

4.1.4.1 STEADY STATE VOLTAGE RANGE (NOMINAL OPERATIONS)

[R/T]

The PDS shall operate nominally within a steady state voltage range from 113Vdc to 126Vdc (@ PDS connector level).

4.1.4.2 PEAK SURGE CURRENT

[R/T]

The PDS input current limit shall be according to the Table 9 and to Figure 7 as defined in SSP 57003 section 3.2.2.2.4

Steady State Input voltage		Iss (Steady State current)	Ipk (For 5A < Iss < 50A Ipk= 0.667*Iss+16.667)	Current Rate Of Change dI/dt (For 0A < Ipk < 50A dI/dT = 300 – 5*Ipk
MAX	126 V	2000 W / 126 V = 15.9 A	27.3 A	163.5 A/ms
MIN	113 V	2000 W / 113 V = 17.7 A	28.5 A	157.5 A/ms

Table 9: PDS input current characteristic

Questo doPDSmento contiene informazioni di proprietà di CARLO GAVAZZI SPACE SpA. Tutti i diritti sono riservati.
All information contained in this doPDSment are property of CARLO GAVAZZI SPACE SpA. All right reserved.

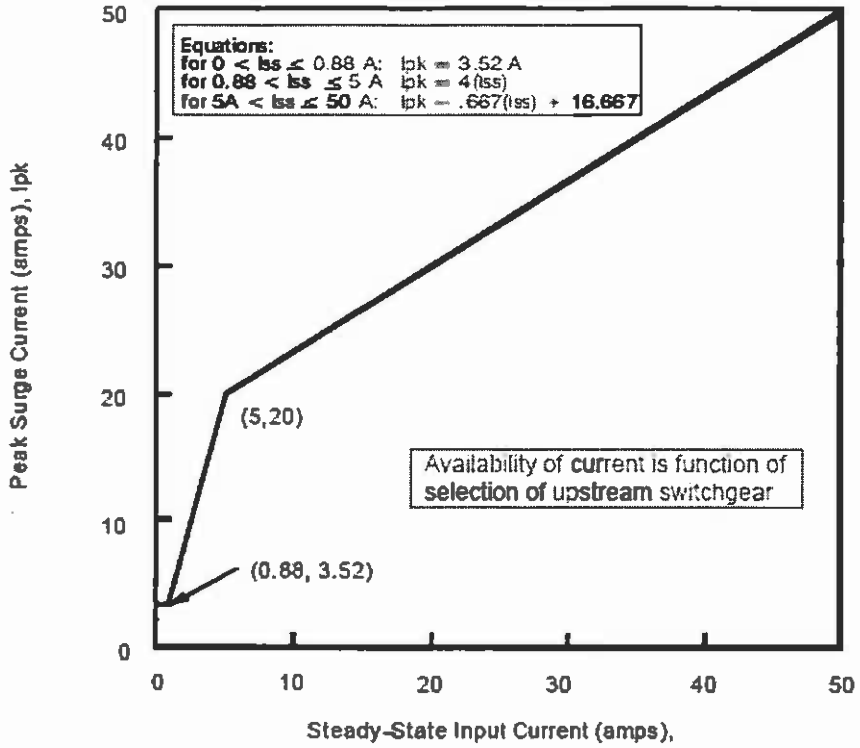

Note 1: For transients less than 100 microseconds, refer to SSP 30237

Figure 7: Peak surge current amplitude versus steady state input current

4.1.4.3 RIPPLE VOLTAGE AND NOISE

[R/T]

The PDS shall operate nominally and be compatible with the ripple voltage spectrum as shown in Figure 8 with a time domain ripple voltage and noise level of 2.5 Vrms.

Questo doPDSmento contiene informazioni di proprietà di CARLO GAVAZZI SPACE SpA. Tutti i diritti sono riservati.
All information contained in this doPDSment are property of CARLO GAVAZZI SPACE SpA. All right reserved.

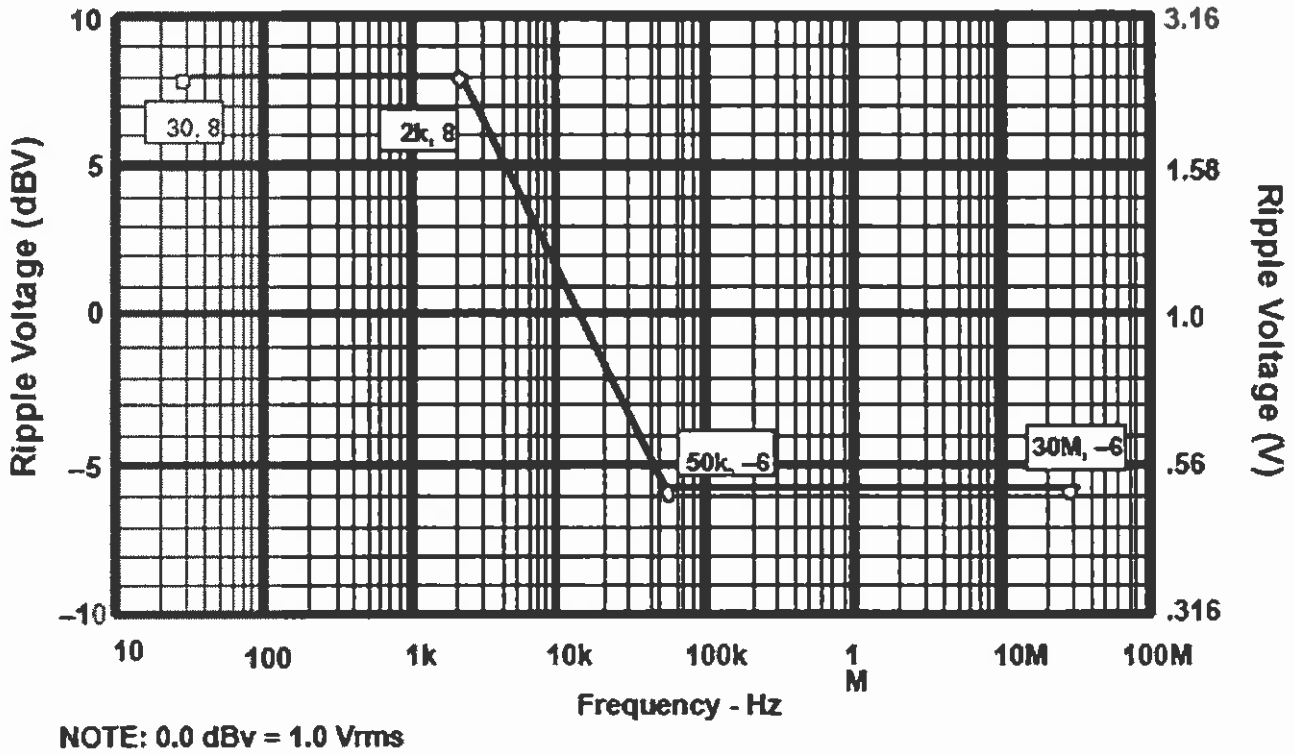

Figure 8:Maximum Input Voltage Ripple Susceptibility Limit

4.1.4.4 TRANSIENT VOLTAGES

[R/T]

The PDS shall operate nominally and be compatible with the limits of magnitude and duration of voltage transients as shown in Figure 9

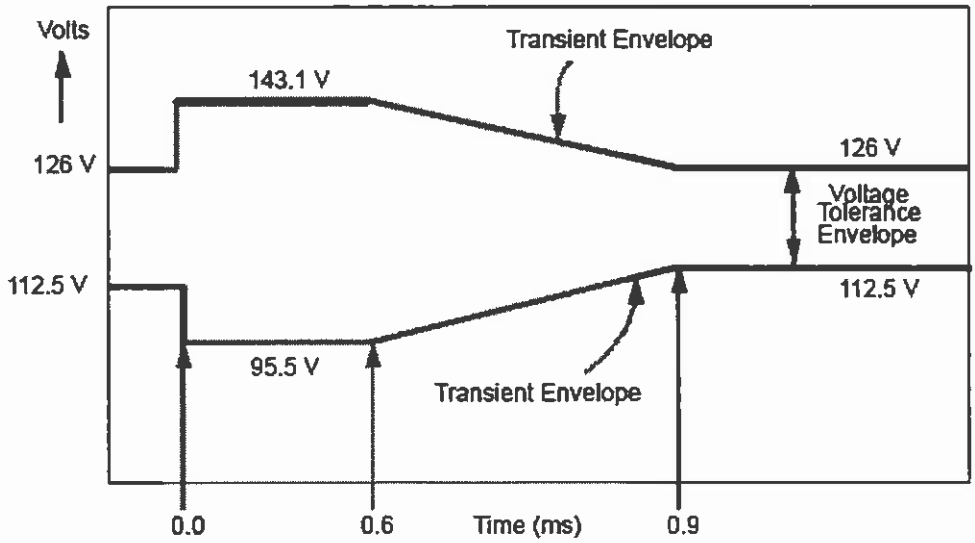

Figure 9: PDS Input Normal Voltage Transient

Questo doPDSmento contiene informazioni di proprietà di CARLO GAVAZZI SPACE SpA. Tutti i diritti sono riservati.
All information contained in this doPDSment are property of CARLO GAVAZZI SPACE SpA. All right reserved.

4.1.4.5 ABNORMAL VOLTAGE CONDITIONS

[R/T]

The PDS design shall be safe and not suffer damage with the abnormal operation voltage levels and duration shown in Figure 10.

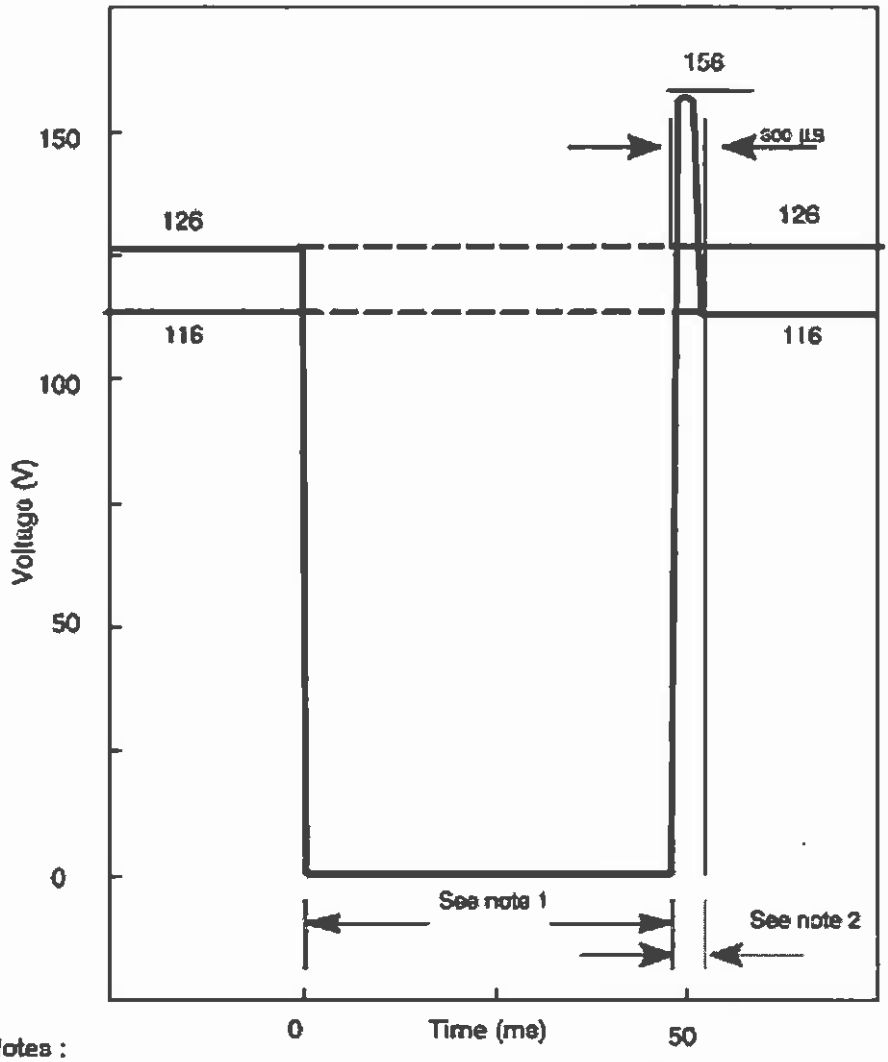

Notes :
1. The duration of abnormal operation is determined by the manner in which the loads are integrated, but shall not exceed 50 msec.
2. 2.0 ms for single event

Figure 10: PDS Input Abnormal Voltage Transient

Questo doPDSmento contiene informazioni di proprietà di CARLO GAVAZZI SPACE SpA. Tutti i diritti sono riservati.
All information contained in this doPDSment are property of CARLO GAVAZZI SPACE SpA. All right reserved.

4.1.4.6 UNSCHEDULED LOSS OF POWER

[R/T]

The PDS design shall withstand sudden, unscheduled loss of power caused by ISS, without any permanent lasting degradation of the specified performance.

4.1.4.7 PDS POWER INPUT IMPEDENCE

[R/T]

PDS impedance characteristics on power feeds shall be for magnitude and phase as shown in Figure 11

Questo doPDSmento contiene informazioni di proprietà di CARLO GAVAZZI SPACE SpA. Tutti i diritti sono riservati.
All information contained in this doPDSment are property of CARLO GAVAZZI SPACE SpA. All right reserved.

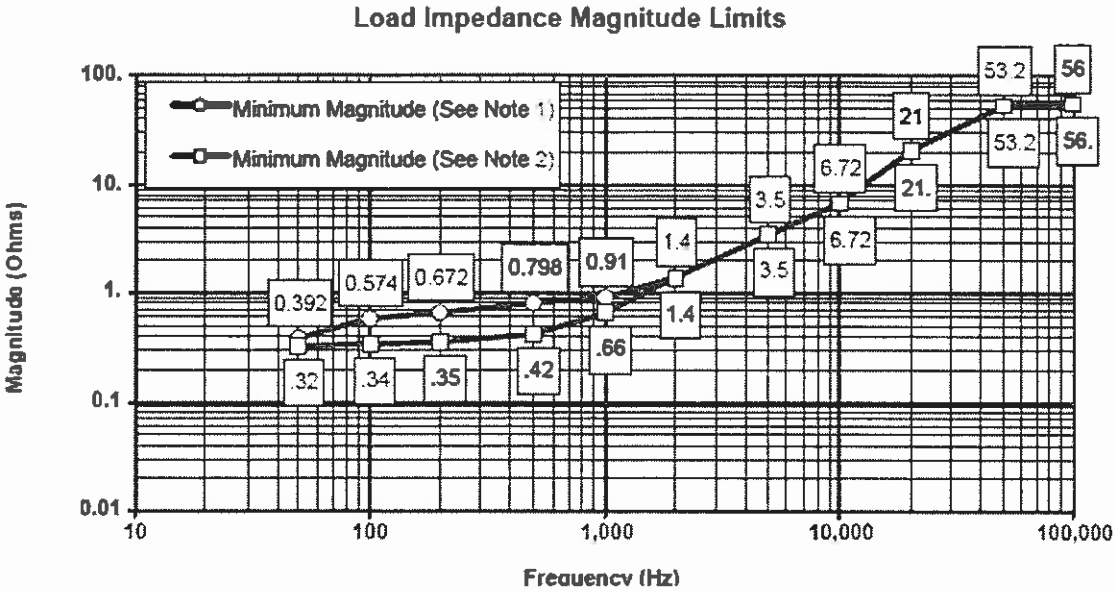

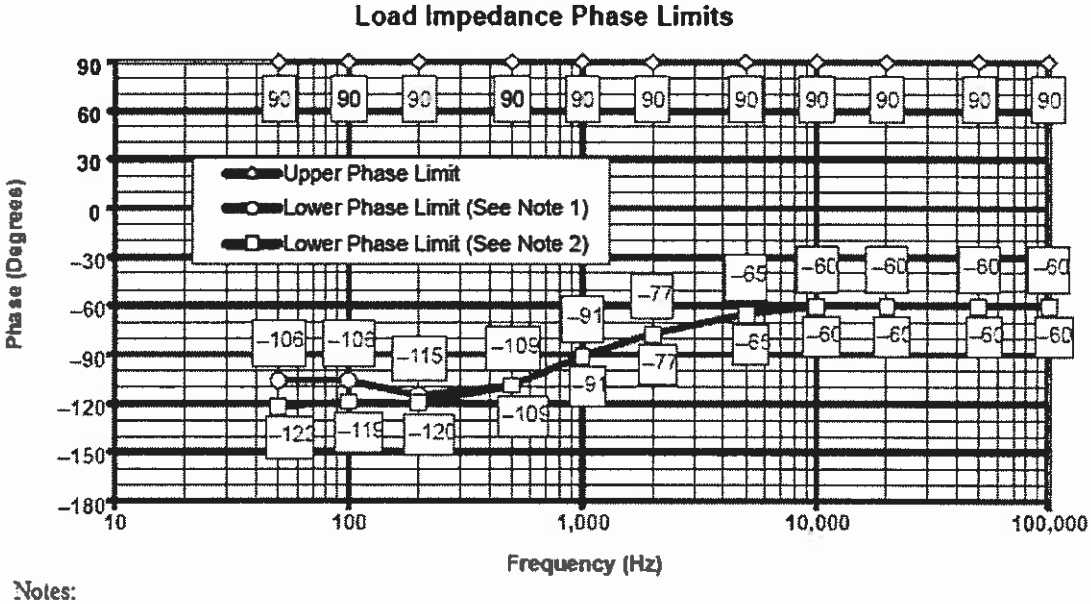

Notes:

1. Limit when steady state EPCE loading is less than 800 watts (see note 3).
2. Limit when steady state EPCE loading is at least 800 watts (see note 3).
3. 800 watts if from two DDCUs operating in parallel, or 400 watts from a single DDCU.

Figure 11:PDS Input Impedance Limits

Questo doPDSmento contiene informazioni di proprietà di CARLO GAVAZZI SPACE SpA. Tutti i diritti sono riservati.
All information contained in this doPDSment are property of CARLO GAVAZZI SPACE SpA. All right reserved.

4.1.4.8 LARGE SIGNAL STABILITY

[R/T]

The PDS shall maintain stability with the ISS interface by damping a transient response to 10 percent of the maximum response amplitude within 1.0 millisecond (ms) and remaining below 10 percent thereafter under the following conditions:

- The rise time/fall time (between 10 and 90 percent of the amplitude) of the input voltage pulse is less than 10 microseconds (s)
- The voltage pulse is varied from 100 to 150 µs in duration.

Figure 12 shall used to clarify the requirement

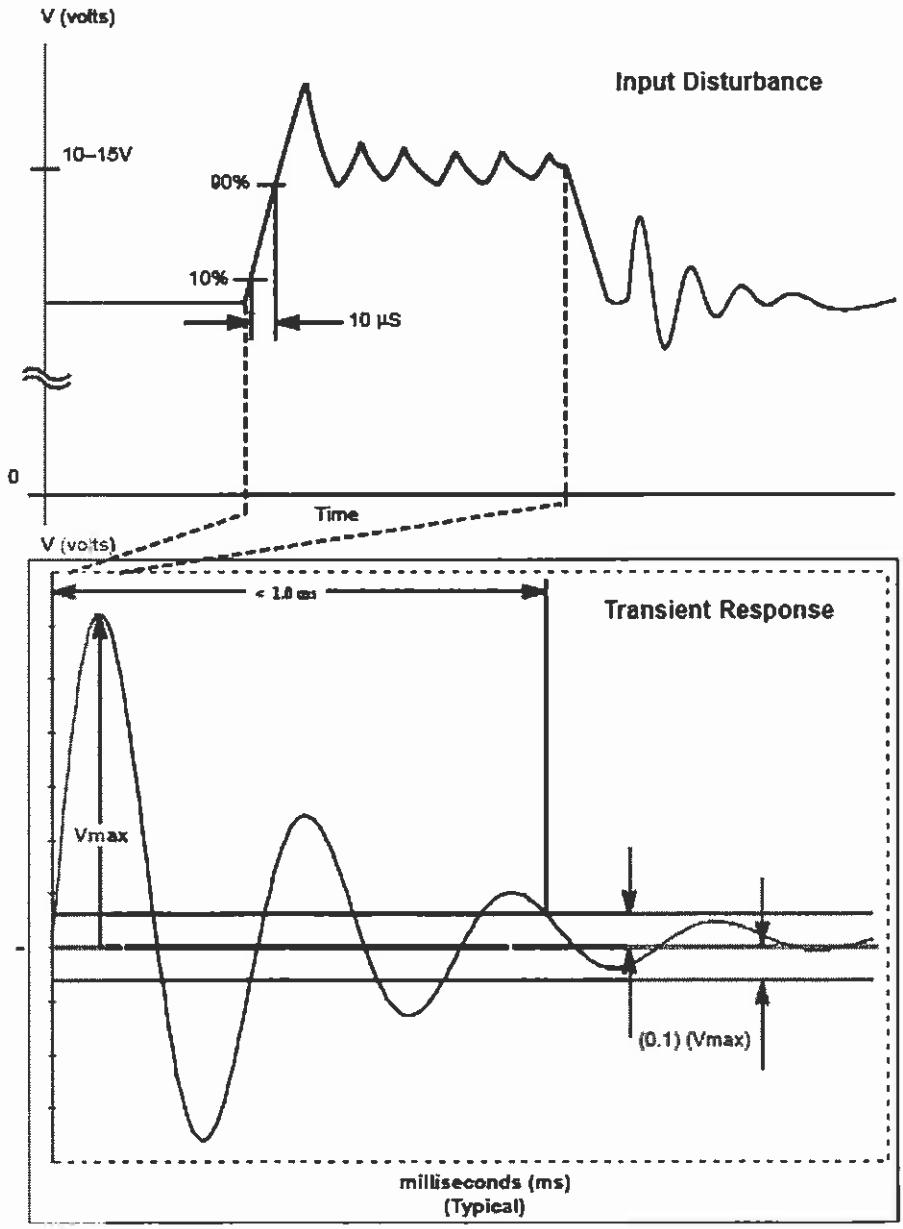

Figure 12: Pulse applied to the PDS

Questo doPDSmento contiene informazioni di proprietà di CARLO GAVAZZI SPACE SpA. Tutti i diritti sono riservati.
All information contained in this doPDSment are property of CARLO GAVAZZI SPACE SpA. All right reserved.

4.1.5 CHARACTERISTICS OF ELECTRICAL 28VDC POWER SUPPLY TO AMS02 SUBSYSTEMS AND INSTRUMENTS

[N/A]

The electrical power characteristics specified in this section are applicable to each power outlet dedicated to AMS02 subsystems and instruments supplied by PDS. The requirements are applicable to the PDS connector interface.

4.1.5.1 28-VDC STEADY-STATE VOLTAGE RANGE

[R/T]

The steady state voltage of PDS 28VDC output feeds shall be 28 Vdc ± 1 Vdc, which applies for the entire range of utilization at maximum DC current load.

When turned OFF the output voltage shall be ≤ 2V.

4.1.5.2 28-VDC OUTPUT POWER

[R/T]

PDS shall distribute to AMS02 Subsystems and Instruments the nominal power consumption shown in Table 10 @28Vdc of continuous voltage.

Table 10 (next page): Nominal PDS Output Power

Questo doPDSmento contiene informazioni di proprietà di CARLO GAVAZZI SPACE SpA. Tutti i diritti sono riservati.
All information contained in this doPDSment are property of CARLO GAVAZZI SPACE SpA. All right reserved.

Voltage	Element	Subsystem / Instruments	Minimum Nominal Powered Required (step 0,1)	Maximum Nominal Powered Required (step 4)
	PDS	Heaters	260,0	0
	CAB	120V A	0	0
@120V	ESEM3B			
	CCEB	120V A	0	460,2
	Heater-1	Ram Tracker Radiator/Condenser	137,0	0
	Heater-2	Ram main radiator	362,0	0
	Heater-3	TRD Gas Box+TTCB+LowerUSS	154,0	154,0
	Heater-4	Wake Tracker Radiator/Condenser	137,0	0
	Heater-5	Wake Main Radiator + CAB	258,0	0
	Heater-6	Zenith radiator I + II	0	0
	Heater-7	Zenith radiator III + IV	0	0
	Heater-8	Rich + Tof	154,0	0
	Heater-9	Ecal + E-Crate	154,0	0
	Heater-10	Cryocoolers I + II	154,0	0
	Heater-11	Cryocoolers III + IV	154,0	0
@28V	PB2+ESEM3A - 1		*(50)*	*(365)*
	28V.1.1	TPD3	0	80,0
	28V.1.2	TPD7	0	80,0
	28V.1.3	JPD_N	50,0	50,5
	28V.1.4	SPD1_N	0	41,9
	28V.1.5	UGPD_N	0	32,7
	28V.1.6	SPD0_R	0	0
	28V.1.7	TPD1	0	80,0
	28V.1.8	TTPD_R	0	0
	PB2+ESEM3A - 2		*(00)*	*(410)*
	28V.2.1	ER1_N	0	74,8
	28V.2.2	TPD2	0	80,0
	28V.2.3	TPD6	0	80,0
	28V.2.4	SPD3_N	0	41,9
	28V.2.5	MPD_N	0	45,6
	28V.2.6	UPD1	0	45,4
	28V.2.7	SPD2_N	0	41,9
	28V.2.8	CAB_R	0	0
	PB2+ESEM3A - 3		*(00)*	*(335)*
	28V.3.1	TPD0	0	80,0
	28V.3.2	TPD4	0	80,0
	28V.3.3	ER0_N	0	74,8
	28V.3.4	MPD_R	0	0
	28V.3.5	SPD3_R	0	0
	28V.3.6	UGPD_R	0	0
	28V.3.7	SPD2_R	0	0
	28V.3.8	CAB_N	0	100,0
	PB2+ESEM3A		*(50)*	*(304)*
	28V.4.1	JPD_R	50,0	0
	28V.4.2	ER1_R	0	0
	28V.4.3	SPD1_R	0	0
	28V.4.4	ER0_R	0	0
	28V.4.5	UPD0	0	45,4
	28V.4.6	SPD0_N	0	41,9
	28V.4.7	TPD5	0	80,0
	28V.4.8	TTPD_N	0	136,3
		total 28V out	*100*	*1413*
		total 120V out	*1924*	*614*
		total load	**2.024,0**	**2.027,7**

Questo doPDSmento contiene informazioni di proprietà di CARLO GAVAZZI SPACE SpA. Tutti i diritti sono riservati.
All information contained in this doPDSment are property of CARLO GAVAZZI SPACE SpA. All right reserved.

4.1.5.3 SOURCE VOLTAGE RIPPLE

[R/T]

The 28-Vdc voltage ripple, in the time domain, for each PDS power output feed shall be < 0.350 Vpp on a pure resistive load, measured with a bandwidth ≤ 50MHz.

4.1.5.4 NORMAL TRANSIENT VOLTAGE CHARACTERISTICS

[R/T]

The PDS 28-Vdc output voltage transients, due to the presence of a normal voltage transient on 120Vdc input line, shall fall within the limits specified in Figure 13, excluding ripple.

Voltage transients will return to the nominal output voltage range within 1.0 ms after the initial off-nominal excursion.

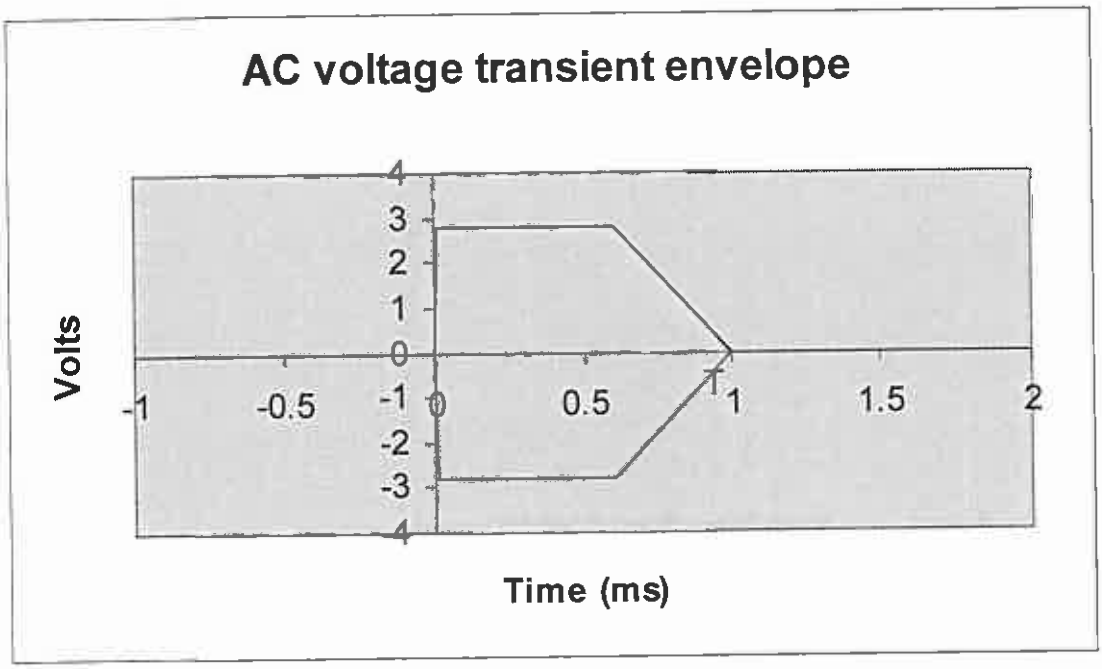

Figure 13: 28Vdc Normal Transient

4.1.5.5 TRANSIENTS OUTPUT VOLTAGES ON OUTLETS SWITCHING

[R/T]

The voltage transient on 28Vdc PDS power outlets (generated by ON/OFF or OFF/ON switching of one other outlet) shall be contained within the envelope shown in the Figure 13 .

Questo doPDSmento contiene informazioni di proprietà di CARLO GAVAZZI SPACE SpA. Tutti i diritti sono riservati.
All information contained in this doPDSment are property of CARLO GAVAZZI SPACE SpA. All right reserved.

4.1.5.6 TRANSIENTS OUTPUT VOLTAGES ON OUTLETS PROTECTION TRIPPING

[R/T]

The voltage transient on 28Vdc PDS power outlets (generated by ON/OFF or OFF/ON tripping of protections on other outlets) shall be contained within the envelope shown in the Figure 13.

4.1.5.7 28 -VDC OVER-VOLTAGE PROTECTION

[R/T]

PDS outputs @28VDC shall be protected in order to limit the output voltage to a max. value of 35VDC that shall never be exceeded. This limit shall be maintained also in case of internal failure of the PDS.

See Table 5 for details

4.1.5.8 28 -VDC OVER-VOLTAGE TRANSIENT

[R/T]

In case of abnormal input voltage transients at the primary 120Vdc input voltage, specified in section 4.1.4.5, each of the PDS 28V DC/DC converter outputs @28VDC shall not exceed the voltage of 35V (peak) for time duration < 0.6ms.

Questo doPDSmento contiene informazioni di proprietà di CARLO GAVAZZI SPACE SpA. Tutti i diritti sono riservati.
All information contained in this doPDSment are property of CARLO GAVAZZI SPACE SpA. All right reserved.

4.1.5.9 28 -VDC VOLTAGE TRANSIENT FOR ABNORMAL OPERATION

[R/T]

The 28Vdc output voltage transient for abnormal operation shall be inside the limit shown in Figure 14

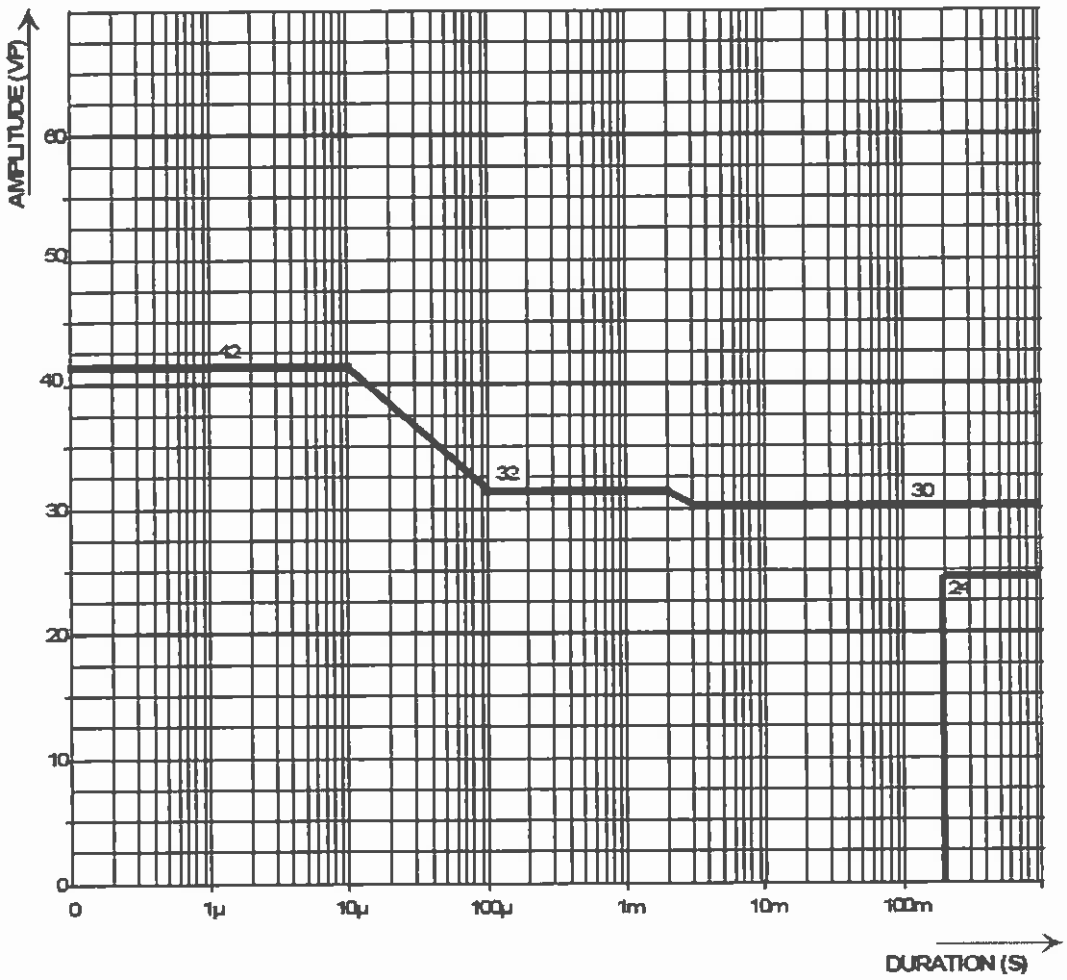

Figure 14: Voltage Transients for Abnormal Operations 28 VDC

Questo doPDSmento contiene informazioni di proprietà di CARLO GAVAZZI SPACE SpA. Tutti i diritti sono riservati.
All information contained in this doPDSment are property of CARLO GAVAZZI SPACE SpA. All right reserved.

4.1.5.10 POWER OUTPUT PROTECTION STATUS MONITORING

[R/T]

The activation status of each 28-Vdc PDS output protection shall be available by means of the CANBUS I/F.

4.1.5.11 POWER OUTPUT SWITCHING COMMANDING

[R/T]

Each 28Vdc PDS output shall be turned-ON or turned-OFF independently upon reception of dedicated command by means of the CANBUS I/F

4.1.5.12 POWER OUTPUT SWITCHING STATUS MONITORING

[R/T]

The ON and OFF status of each 28Vdc PDS output shall be available by means of the CANBUS I/F.

4.1.5.13 POWER OUTPUT RESET

[R/T]

Each 28Vdc PDS output protection shall be re-set upon reception of dedicated command by means of the CANBUS I/F.

Questo doPDSmento contiene informazioni di proprietà di CARLO GAVAZZI SPACE SpA. Tutti i diritti sono riservati.
All information contained in this doPDSment are property of CARLO GAVAZZI SPACE SpA. All right reserved.

4.1.6 CHARACTERISTICS OF ELECTRICAL 120VDC POWER SUPPLY TO AMS02 SUBSYSTEMS AND INSTRUMENTS

[N/A]

The electrical power characteristics specified in this section are applicable to each power outlet dedicated to AMS02 subsystems and instruments supplied by PDS. The requirements are applicable to the PDS connector interface.

4.1.6.1 120-VDC OUTPUT POWER

[R/T]

PDS shall distribute to AMS02 Subsystems and Instruments the nominal power consumption shown in Table 10 @120Vdc of continuous voltage.

.

4.1.6.2 120-VDC OUTPUT CURRENT RATING

[R/T]

The nominal output current of each 120-Vdc output feed are described here below:

- 1.4A (#9)
- 2.3A (#1)
- 3.2A (#1)
- 10A (#1)

4.1.6.3 POWER OUTPUT PROTECTION STATUS MONITORING

[R/T]

The activation status of each 120-Vdc PDS output protection shall be available by means of the CANBUS I/F.

4.1.6.4 POWER OUTPUT SWITCHING COMMANDING

[R/T]

Each 120Vdc PDS output shall be turned-ON or turned-OFF independently upon reception of dedicated command by means of the CANBUS I/F

4.1.6.5 POWER OUTPUT SWITCHING STATUS MONITORING

[R/T]

The ON and OFF status of each 120Vdc PDS output shall be available by means of the CANBUS I/F

Questo doPDSmento contiene informazioni di proprietà di CARLO GAVAZZI SPACE SpA. Tutti i diritti sono riservati.
All information contained in this doPDSment are property of CARLO GAVAZZI SPACE SpA. All right reserved.

4.1.6.6 CCEB POWER OUTPUT RESET

[R/T]

The PDS 120Vdc CCEB output protection shall be re-set upon reception of dedicated command by means of the CANBUS I/F.

Questo doPDSmento contiene informazioni di proprietà di CARLO GAVAZZI SPACE SpA. Tutti i diritti sono riservati.
All information contained in this doPDSment are property of CARLO GAVAZZI SPACE SpA. All right reserved.

4.2 MECHANICAL INTERFACE REQUIREMENTS

4.2.1 MECHANICAL INTERFACE

[R]

The PDS shall be mechanically connected to the Wake Radiators and shall be foreseen the possibility to connect it to a test radiator during integration and verification activities.

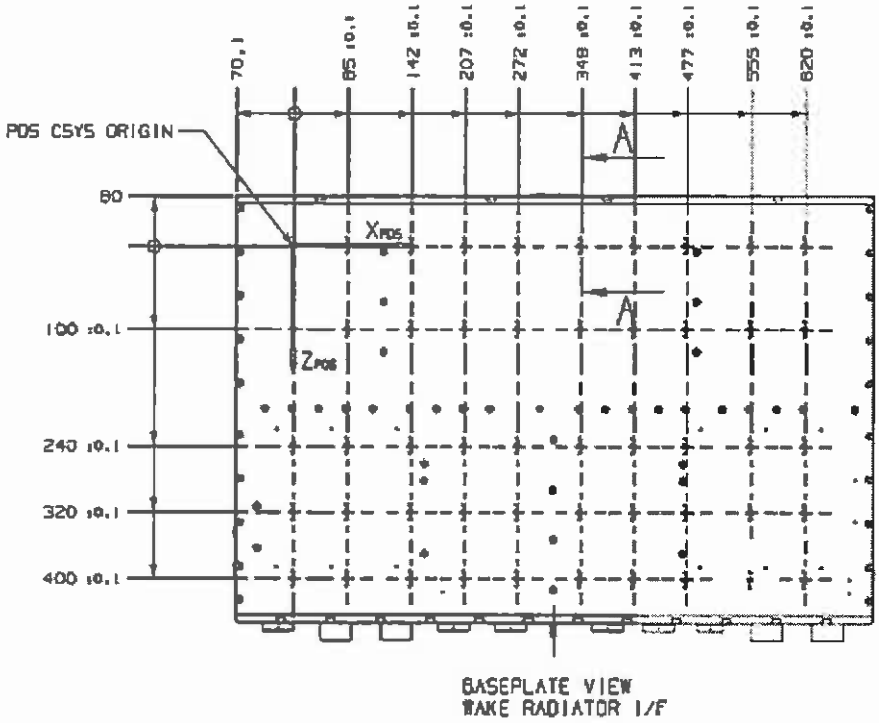

Figure 15: PDS Base plate I/F

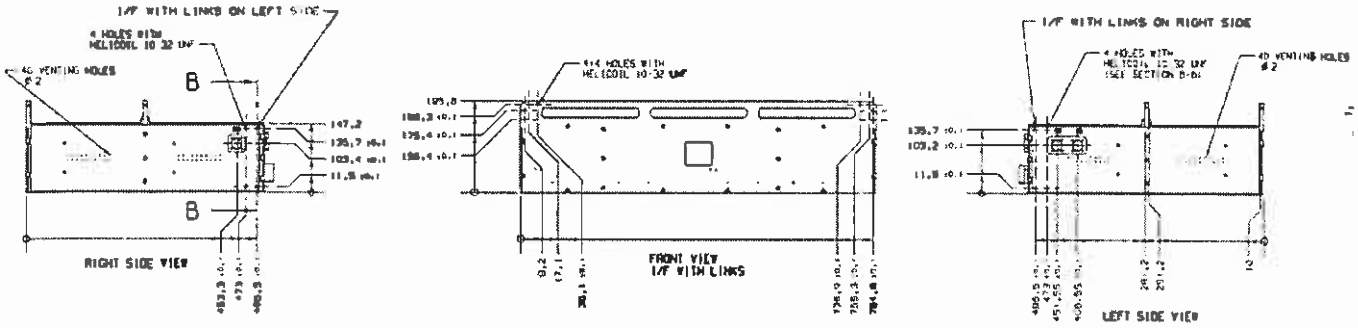

Figure 16: PDS overall Mechanical I/F

Questo doPDSmento contiene informazioni di proprietà di CARLO GAVAZZI SPACE SpA. Tutti i diritti sono riservati.
All information contained in this doPDSment are property of CARLO GAVAZZI SPACE SpA. All right reserved.

4.2.1.1 VENTING HOLE

[R]

The PDS shall provide venting holes to avoid damage due to over-pressure during the ascent and the descent phases.

4.2.1.2 CO-ORDINATE SYSTEM

[R/I]

The PDS co-ordinates system shall be in accordance with the co-ordinates system shown in Figure 17.

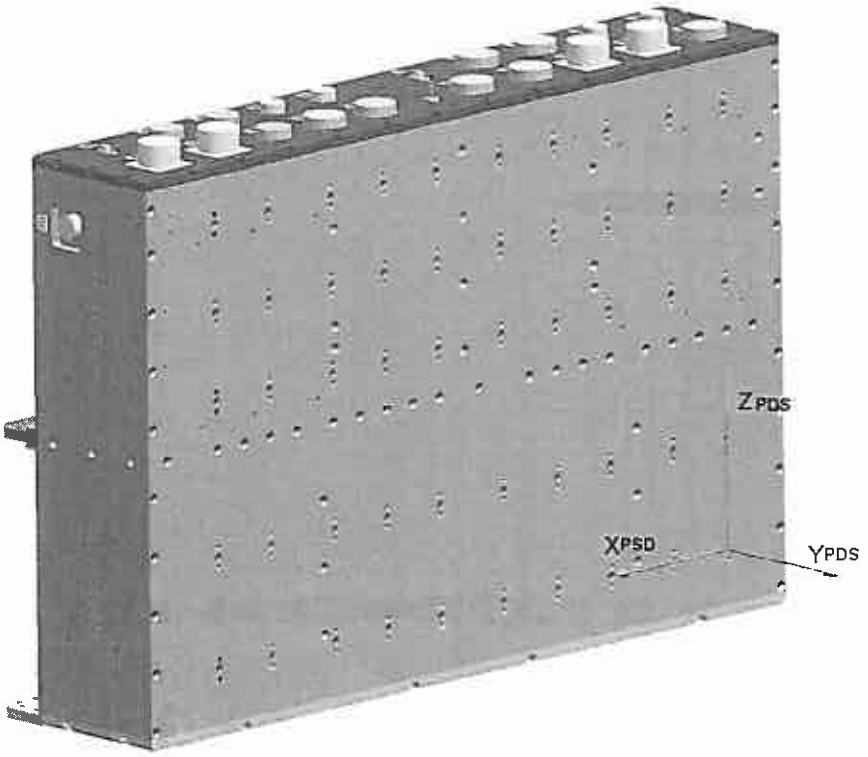

Figure 17: PDS Coordinate System

Questo doPDSmento contiene informazioni di proprietà di CARLO GAVAZZI SPACE SpA. Tutti i diritti sono riservati.
All information contained in this doPDSment are property of CARLO GAVAZZI SPACE SpA. All right reserved.

4.2.1.3 ENVELOPE

[R/T]

The PDS physical envelope shall be not greater then: W 773mm X L 514mm (excluding connectors) X H 196mm (including rails).

The tolerance shall be ±0.5mm

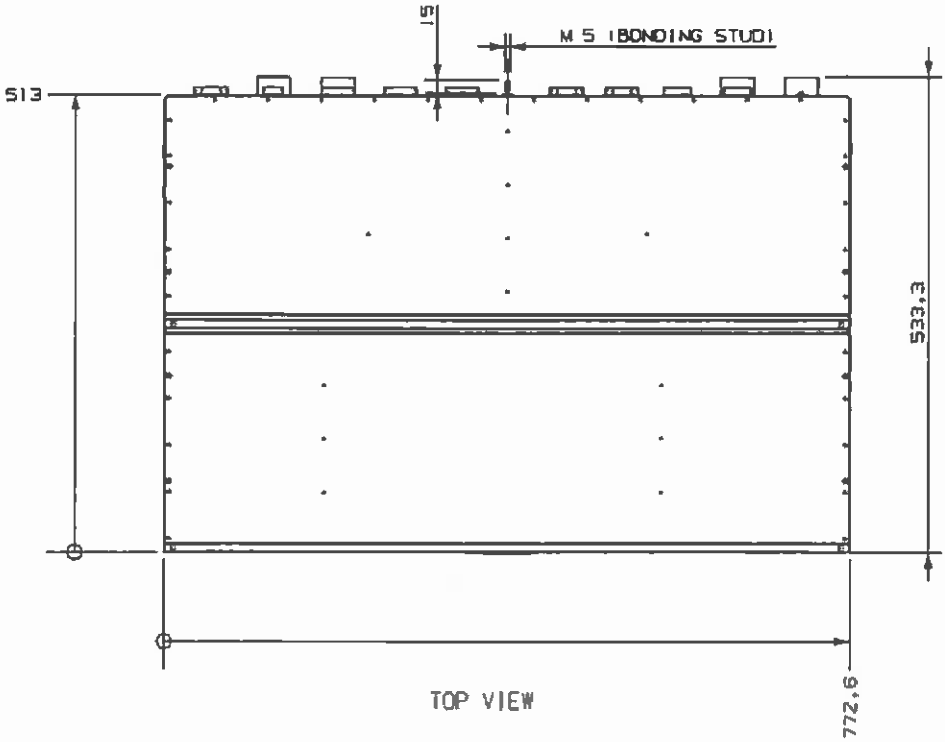

Figure 18: PDS Envelope

4.2.1.4 MASS

[R/T]

The PDS total mass shall be not greater than 50 Kg, excluding thermal radiators and mounting bolts.

4.2.1.5 CONNECTOR ACCOMMODATION

[R/I]

The PDS electrical connectors shall be located on the rear side of the unit

The PDS heaters connectors and test connectors shall be located on the side wall of the unit

Questo doPDSmento contiene informazioni di proprietà di CARLO GAVAZZI SPACE SpA. Tutti i diritti sono riservati.
All information contained in this doPDSment are property of CARLO GAVAZZI SPACE SpA. All right reserved.

4.2.1.6 BONDING STUD

[R/I]

PDS shall provide a bonding stud that shall be a standard M5 with a surface contact area of at least 50 mm2

4.2.2 STRUCTURAL INTERFACES

[R/T]

The following MWL random vibration level shall be used for proto-qualification of the PDS according to AMS Structural Verification Plan (see AD[4])

Frequency (Hz)	PSD (g^2/Hz)
20	0.01
80	0.04
500	0.04
2000	0.01
Composite: 6.8 gRMS Duration: 60 sec	

Table 11: PDS Proto-qualification random vibration levels on the three axes

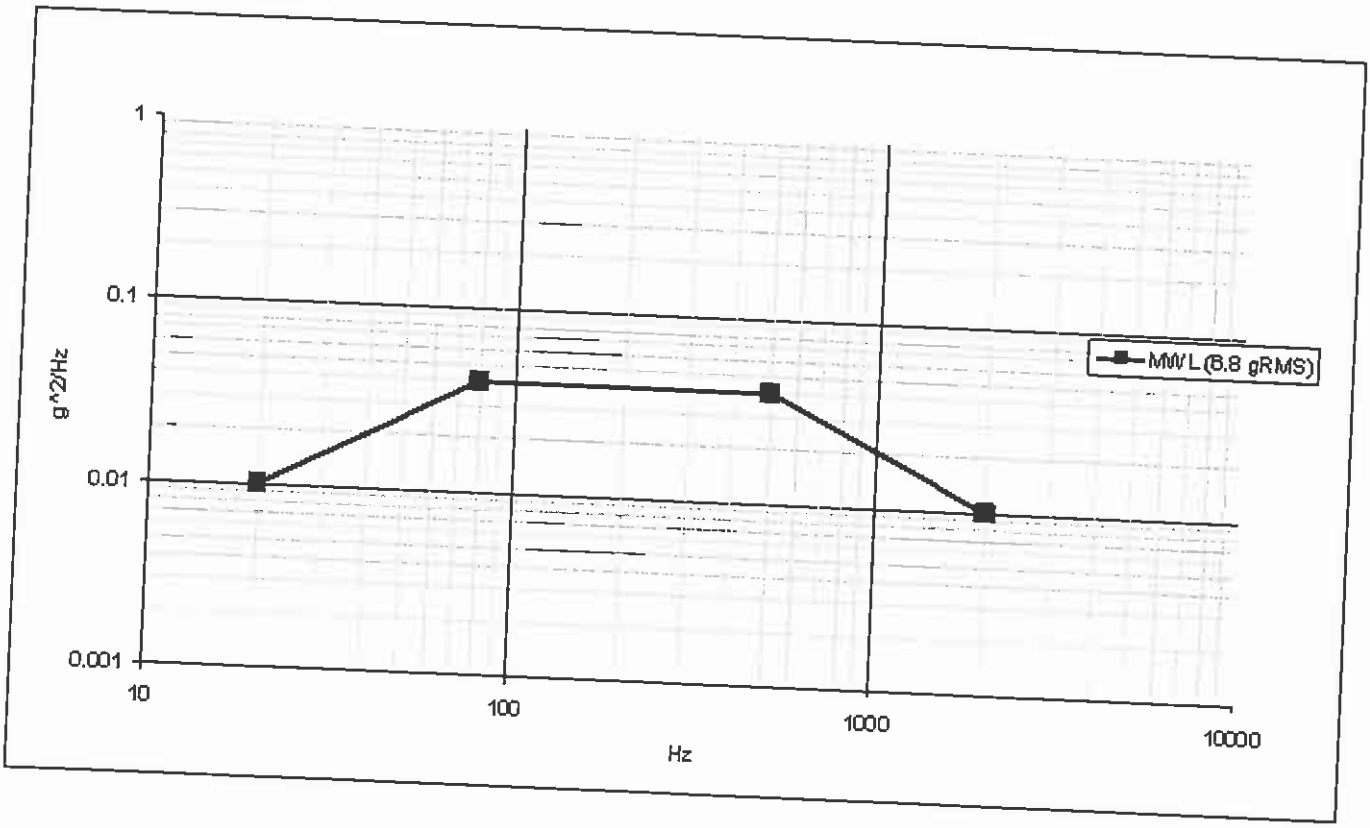

Figure 19: PDS Proto-qualification random vibration levels on the three axes

Questo doPDSmento contiene informazioni di proprietà di CARLO GAVAZZI SPACE SpA. Tutti i diritti sono riservati.
All information contained in this doPDSment are property of CARLO GAVAZZI SPACE SpA. All right reserved.

4.2.2.1 NOTCHING CRITERIA

[R/T]

To avoid the overstressing of the PDS PFM, notching of MWL shall be allowed In order to avoid artificial high resonant loads in flight hardware according to the following guidelines:

- Notching shall be implemented so that the maximum gRMS measured on the accelerometers mounted on the PDS external walls shall not exceed 6.8 gRMS (±10%).
- The notched input spectrum shall not fall below the MEFL in any frequency range.

4.2.2.2 PDS STRUCTURAL FEM

[R/A]

The PDS structural analysis shall be performed using a structural FEM, based on the NASTRAN S/W package.

The FEM shall use International Systems Units.

Questo doPDSmento contiene informazioni di proprietà di CARLO GAVAZZI SPACE SpA. Tutti i diritti sono riservati.
All information contained in this doPDSment are property of CARLO GAVAZZI SPACE SpA. All right reserved.

4.3 THERMAL INTERFACE REQUIREMENTS

4.3.1 THERMAL REQUIREMENTS

4.3.1.1 THERMAL CONTROL CONCEPT

[R/A]

- A maximum amount of 365 W for PDS configuration can be exchanged between PDS and AMS02 by means of Wake Radiator.

4.3.1.2 TEMPERATURE LIMITS (DEFINITIONS)

4.3.1.2.1 FLIGHT OPERATING TEMPERATURE LIMITS

The flight operating temperature limits specify the temperature extremes between which the equipment shall be designed to operate with performances and reliability, meeting all the specification requirements.

4.3.1.2.2 QUALIFICATION TEMPERATURE LIMITS

The qualification temperature limits specify the temperature extremes to which the PFM (proto-flight model) equipment shall be subjected during thermal vacuum testing.

The objective of this test shall be to verify workmanship and to demonstrate compliance with performance requirements.

The qualification limits shall be at least 5°C more severe than the flight operating temperatures.

4.3.1.2.3 NON OPERATING TEMPERATURE LIMITS

The non-operating temperature limits specify the temperature extremes between which the equipment shall be designed to survive without functioning for any period of the mission and without performance degradation.

4.3.1.2.4 START UP TEMPERATURE

The start-up temperature specifies the minimum temperature at which the equipment may have power applied to it, or be activated.

4.3.1.2.5 GROUND STORAGE TEMPERATURE

The ground storage temperature limits specify the temperature extremes between which the equipment shall be designed to survive in an unpowered state during manufacturing, storage, handling, transport and integration.

Ground storage temperatures must include or shall be identical to non-operating temperatures.

Questo doPDSmento contiene informazioni di proprietà di CARLO GAVAZZI SPACE SpA. Tutti i diritti sono riservati.
All information contained in this doPDSment are property of CARLO GAVAZZI SPACE SpA. All right reserved.

4.3.1.2.6 COMPONENTS TEMPERATURE LIMITS

[A]

At the PDS flight operating temperature conditions (see para 4.3.3), the equipment component temperature shall not exceed the 80% of their maximum operating temperature shown in the data sheets.

4.3.1.3 TEMPERATURE REFERENCE POINT

[R]

All temperature and stability requirements of equipment shall refer to the Equipment Temperature Reference Point (TRP).

TRP location shall be precisely defined in the unique ICD

4.3.1.4 THERMAL PROPERTIES

4.3.1.4.1 GENERAL

[R]

All thermal / thermo-optical properties used in the analyses shall be demonstrated by manufacturer data and process qualification report or measurement on sample or measurement on the Equipment itself.

4.3.1.4.2 AGEING/RADIATION

[R]

The effects of ageing and radiation must be considered to estimate thermo-optical characteristic degradation

Questo doPDSmento contiene informazioni di proprietà di CARLO GAVAZZI SPACE SpA. Tutti i diritti sono riservati.
All information contained in this doPDSment are property of CARLO GAVAZZI SPACE SpA. All right reserved.

4.3.2 PDS TO AMS02 THERMAL INTERFACES

[R/A]

- The overall thermal conductance between the PDS and the AMS02 by means of Wake Radiator shall be such as to limit the thermal exchange by conduction below 365W in all the mission phases.

4.3.3 OPERATING TEMPERATURE RANGE

[R/A/T]

PDS shall operate in nominal mode in the temperature range of –25°C / +51.4°C at TRP.

4.3.4 NON-OPERATING TEMPERATURE RANGE

[R/A/T]

PDS shall withstand indefinitely without degradation in the temperature range of –40°C / +80°C.

Questo doPDSmento contiene informazioni di proprietà di CARLO GAVAZZI SPACE SpA. Tutti i diritti sono riservati.
All information contained in this doPDSment are property of CARLO GAVAZZI SPACE SpA. All right reserved.

4.4 CONNECTOR REQUIREMENTS

4.4.1 CONNECTOR CHARACTERISTICS

4.4.1.1 ALLOCATION OPTIMISATION

[R]

The PDS connector allocation shall be optimised to prevent incorrect connection with other adjacent connector plugs and receptacles of similar connector types by using of different shell size, connector keying and orientation, clear marking of connector plugs/receptacles.

4.4.1.2 CIRCULAR CONNECTOR ORIENTATION

[R]

The PDS circular connectors shall be oriented so that the master (largest) key is at the top (12 o'clock) or forward position in installed condition.

4.4.1.3 CONNECTOR FIXATION

[R/I]

Receptacles whose mating plug have locking features requiring a twisting motion (bayonet or threaded type) shall be positively keyed or pinned to their mounting surface so that it is not possible for the receptacles to return during plug attachment.

4.4.1.4 CONNECTOR PIN ASSIGNMENT

[R]

When different EMC classes use the same connector, pin assignment and layout shall guarantee isolation between classes. Ground and spare pins shall be utilized to provide such isolation.

4.4.1.5 TWISTED WIRES

[R]

Twisted couples of wires shall use adjacent connector contact.

Questo doPDSmento contiene informazioni di proprietà di CARLO GAVAZZI SPACE SpA. Tutti i diritti sono riservati.
All information contained in this doPDSment are property of CARLO GAVAZZI SPACE SpA. All right reserved.

4.4.1.6 FLYING UNMATED CONNECTOR

[R/I]

The PDS electrical connectors not engaged during the mission shall be covered with a conductive cap.

4.4.1.7 DUST CAPS

[R/I]

The PDS unmated connectors shall be protected with plastic dust caps and wrapped with transparent bags during storage, handling, transportation and installation of harness.

4.4.1.8 FUNCTIONAL INTERFACE DRAWINGS

[R]

A functional drawing shall be provided for the PDS interfaces, with the complete set of signal, data and power interfaces specifying for each one the following:

- the reference interface name;
- the source
- the connector type and cod. number,

4.4.1.9 INTERFACE TABLES

[R]

The following interface tables shall be provided:

- PDS power interfaces characteristics
- PDS signal interface characteristics
- PDS Connector matrix, including following information: Conn_Name, Conn_ParNum, Conn_Function, number of pins, pin_description.

Questo doPDSmento contiene informazioni di proprietà di CARLO GAVAZZI SPACE SpA. Tutti i diritti sono riservati.
All information contained in this doPDSment are property of CARLO GAVAZZI SPACE SpA. All right reserved.

5. ENVIRONMENTAL REQUIREMENTS

5.1 CLEANLINESS AND CONTAMINATION CONTROL

5.1.1 EQUIPMENT SURFACE CLEANLINESS

5.1.1.1 DESIGN FOR CLEANLINESS

[R]

Design shall allow external surfaces to be cleaned with solvents and equipment available at the launch site (lint free cloths/swabs, isopropyl alcohol, demineralised water etc.).

5.1.1.2 CLEANLINESS LEVEL

[I]

The equipment shall be delivered clean (external and accessible surfaces) and protected to visibly clean "Sensitive"

5.1.1.3 EXTERNAL CONTAMINATION

[R]

PDS Materials shall be contained in the Declared Material List and Para 3.5.1.5 of SSP 57003 (see AD[1]) shall be applicable.

5.1.1.4 MOLECULAR DEPOSITION FROM MATERIALS OUTGASSING AND VENTING

[R]

PDS shall comply with requirements of sect 3.5.1.5.2 of SSP 57003 (see AD[1])

Questo doPDSmento contiene informazioni di proprietà di CARLO GAVAZZI SPACE SpA. Tutti i diritti sono riservati.
All information contained in this doPDSment are property of CARLO GAVAZZI SPACE SpA. All right reserved.

5.2 RADIATION ENVIRONMENT

[R/A]

PDS shall comply with requirements of sect 3.5.1.8 and sect 3.5.1.9 of SSP 57003 (see AD[1])

5.3 MECHANICAL ENVIRONMENT

[NA]

See para 4.2 of this Specification.

Questo doPDSmento contiene informazioni di proprietà di CARLO GAVAZZI SPACE SpA. Tutti i diritti sono riservati.
All information contained in this doPDSment are property of CARLO GAVAZZI SPACE SpA. All right reserved.

5.4 THERMAL ENVIRONMENT

[R/A/T]

The PDS shall be controlled in their specified temperature limits (according to the selected mode/phase) when exposed to the following environmental conditions:

Temperature			
Ground Handling and Transportation	- 40 °C to + 80 °C		
Prelaunch/Postflight/Storage	- 18 °C to + 38 °C		
On-Orbit Environment			
Solar Radiation	231 to 254 W/m²		
Earth Albedo	19 to 37 W/m²		
Earth Radiation	138 to 189 W/m²		
Pressure			
Prelaunch/Postflight/Storage	104800 Pascal maximum		
Ascent to Orbit	defined in RD[1], Section 10.6		
On-Orbit	1.0E-07	torr	minimum

Table 12: PDS Thermal Environment

Questo doPDSmento contiene informazioni di proprietà di CARLO GAVAZZI SPACE SpA. Tutti i diritti sono riservati.
All information contained in this doPDSment are property of CARLO GAVAZZI SPACE SpA. All right reserved.

5.5 EMC REQUIREMENTS

5.5.1 SELF-COMPATIBILITY

[R/T]

The PDS, designed in accordance with the EMC applicable requirements, shall not malfunction, and performance shall not be degraded during the EMC integrated system test activities.

5.5.2 GROUNDING AND ISOLATION REQUIREMENTS

5.5.2.1 POWER INTERFACES

5.5.2.1.1 PRIMARY POWER ISOLATION

[R/T]

The PDS primary electrical power interfaces @120VDC shall be DC galvanically isolated among them and from the chassis by a minimum of 1Mohm for both positive and return lines and the mutual capacitance shall be less than 0.03μF.

Mutual capacitance is defined as line-to-line capacitance, exclusive of the EMI input filter.

5.5.2.1.2 PRIMARY POWER TO SECONDARY ISOLATION

[R/T]

The PDS shall implement a galvanic isolation between the primary power lines and all the secondary power lines by a minimum of 1Mohm for both positive and return lines.

5.5.2.1.3 SECONDARY POWER GROUNDING

[R/T]

The PDS shall be designed to connect all secondary power reference to a single point ground reference that shall be grounded to PDS structure

Questo doPDSmento contiene informazioni di proprietà di CARLO GAVAZZI SPACE SpA. Tutti i diritti sono riservati.
All information contained in this doPDSment are property of CARLO GAVAZZI SPACE SpA. All right reserved.

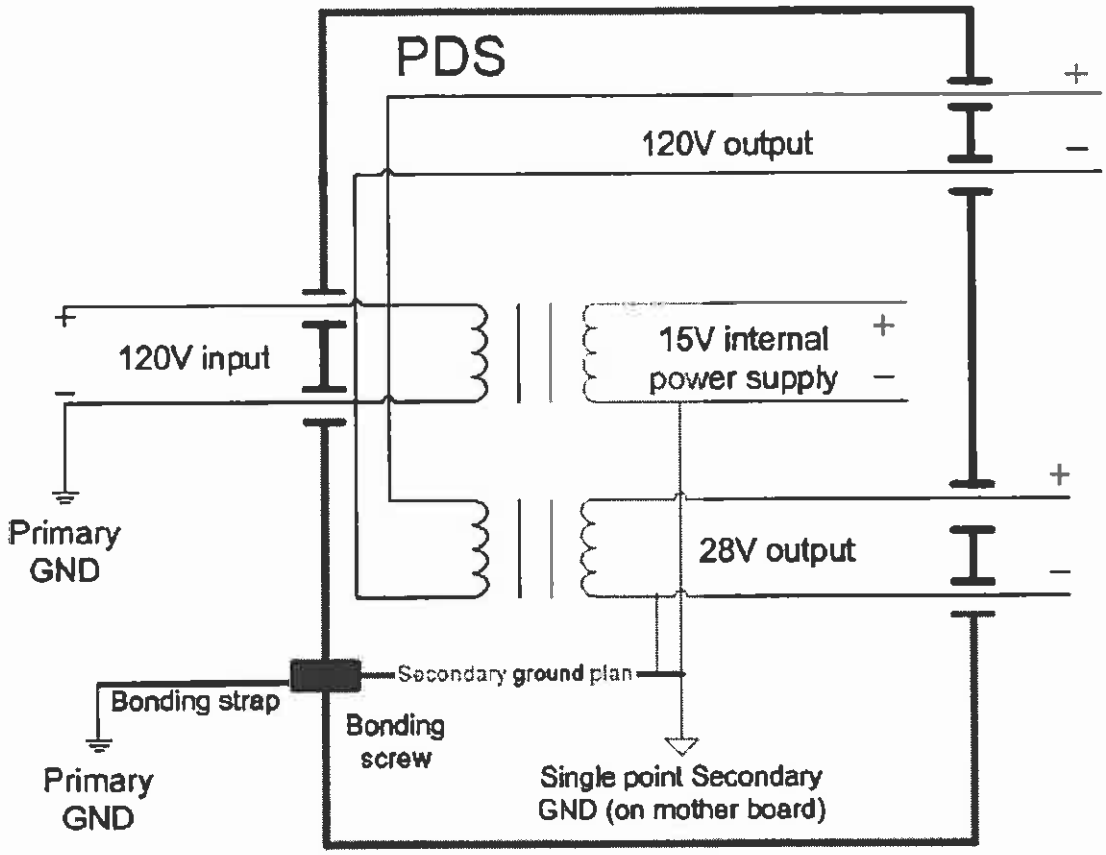

Figure 20: PDS Grounding and Isolation diagram

Questo doPDSmento contiene informazioni di proprietà di CARLO GAVAZZI SPACE SpA. Tutti i diritti sono riservati.
All information contained in this doPDSment are property of CARLO GAVAZZI SPACE SpA. All right reserved.

5.5.2.2 ELECTRICAL BONDING

5.5.2.2.1 BONDING REQUIREMENTS

[R/T]

Electrical equipment shall have a bonding resistance of equal to or less than 2.5 m0hm D.C. per bonding junction between:

- different parts of the equipment chassis,
- connector receptacles and equipment chassis/connector brackets,
- equipment chassis and bond strap,
- bond strap and structure.

5.5.2.2.2 SHIELDING REQUIREMENTS

[R]

PDS design shall comply with the following shielding rules:

- Shielding systems to control and to protect against the effects of allowed electromagnetic interference shall be provided in the design of electrical/electronic equipment.
- Conductive enclosure walls shall be used for units, internal compartments and screens in order to reflect and absorb impinging electromagnetic interference fields.
- To maintain the shielding integrity of the basic shield enclosure, apertures shall beminimised in quantity and size.

5.5.2.3 ELECTROMAGNETIC INTERFERENCE

5.5.2.3.1 CONDUCTED EMISSIONS

[R/T]

PDS shall comply with requirements of sect 3.2.3.4.4 SSP 57003 AD[1] (section 3.2.1 of SSP 30237 AD[5]).

5.5.2.3.2 CONDUCTED SUSCEPTIBILITY

[R/T]

PDS shall comply with requirements of sect 3.2.3.4.4 SSP 57003 AD[1] (section 3.2.2 of SSP 30237 AD[5]).

5.5.2.4 ELECTROSTATIC DISCHARGE

[T]

PDS shall not be damaged by Electrostatic Discharge (ESD) equal to or less than 4,000 V to the case.

Questo doPDSmento contiene informazioni di proprietà di CARLO GAVAZZI SPACE SpA. Tutti i diritti sono riservati.
All information contained in this doPDSment are property of CARLO GAVAZZI SPACE SpA. All right reserved.

6. PRODUCT ASSURANCE REQUIREMENTS

[NA]

The following requirements are applicable to the PDS design and shall be met in the applicable worst case natural and induced environments, in which the payload is to be handled, stored and operated.

6.1 SAFETY AND RELIABILITY REQUIREMENTS

6.1.1 FAILURE TOLERANCE DESIGN

[A/R]

The PDS shall be designed such that:

- No single failure shall cause a critical hazard
- No combination of two failures shall cause a catastrophic hazard

6.1.2 FAILURE PROPAGATION

[A/R]

The PDS design shall prevent failure propagation to another unit (whether the latter belongs to AMS02 or not). The PDS shall possibly support in-orbit the delimitation of the failure effects, and subsequent recovery.

Note: No On-orbit Maintenance is foreseen for PDS.

6.1.3 MECHANICAL REQUIREMENTS

6.1.3.1 MATERIALS DESIGN ALLOWABLES

[R]

Materials selection shall be made in accordance to ECSS-Q-70B and shall be shown in the PDS DML .

6.1.3.2 VENTING PROVISION

[R]

The PDS shall provide the venting provisions/holes in accordance with the applicable requirements.

Questo doPDSmento contiene informazioni di proprietà di CARLO GAVAZZI SPACE SpA. Tutti i diritti sono riservati.
All information contained in this doPDSment are property of CARLO GAVAZZI SPACE SpA. All right reserved.

6.2 ELECTRICAL, ELECTRONIC, ELECTROMECHANICAL (EEE) PARTS

6.2.1 EEE COMPONENT ENGINEERING

[R/A]

The PDS shall implement components that are capable of meeting the performance, lifetime, stability, environmental, material, safety, quality and reliability of AMS-02 requirements.

Note: this requirement is not applicable for component from USCM Design (see AD[3])

6.2.1.1 COMPONENT MATERIALS

[R/A]

The Contractor shall ensure that exposed materials of components meet the safety AMS-02 requirements established regarding out gassing, flammability or other criteria as required for the intended use.

6.2.1.2 PROHIBITED COMPONENTS

[R]

Components containing materials that may constitute a safety hazard are prohibited from being used without prior authorization. Use of components with known instability shall be avoided and requires approval for each application.

6.2.1.3 RADIATION REQUIREMENTS

6.2.1.3.1 TOTAL DOSE

[R]

EEE parts used in the PDS shall withstand a total dose of 3 KRad (Si) as a minimum, considering a shielding thickness of 2 mm Aluminum equivalent.

Note: this requirement is not applicable for component from USCM Design (see AD[3])

Questo doPDSmento contiene informazioni di proprietà di CARLO GAVAZZI SPACE SpA. Tutti i diritti sono riservati.
All information contained in this doPDSment are property of CARLO GAVAZZI SPACE SpA. All right reserved.

6.2.1.4 EEE COMPONENT SELECTION

6.2.1.4.1 PREFERRED COMPONENTS

[R/I]

PDS components shall be selected in accordance to para. 6.2.1 or in alternative to the "Ams E-PPL", AMS Electronics Preferred Parts List from AMS-02 Collaboration (see AD[2] for details)

6.2.1.4.2 OFF-THE SHELF COMPONENTS

[R/I]

Components from stocks with a lot/date code exceeding 7 years, shall be tested in order to perform a re-life test.

Parts older than 10 years shall not be installed on boards
Deviation on the above shall be managed case by case according to AMS02 needs

6.2.1.4.3 PROCUREMENT REQUIREMENTS

6.2.1.4.3.1 PROCUREMENT SPECIFICATION

[R]

Each type of component used by the Contractor shall be controlled by the "Ams E-PPL", AMS Electronics Preferred Parts List from AMS-02 Collaboration (see AD[2] for details)

6.2.1.4.3.2 PRINTED CIRCUIT BOARD QUALITY LEVEL

[R]

Single and double sided printed circuit boards (PCBs) shall comply with the technical requirements of ECSS-Q-70B.

Multi-layer printed circuit boards shall comply with the technical requirements of ECSS-Q-70B.

Questo doPDSmento contiene informazioni di proprietà di CARLO GAVAZZI SPACE SpA. Tutti i diritti sono riservati.
All information contained in this doPDSment are property of CARLO GAVAZZI SPACE SpA. All right reserved.

6.3 MATERIAL, MECHANICAL PARTS AND PROCESSES (PMP)

6.3.1 SELECTION AND APPROVAL

[R]

Initial material selection shall be made following the guidelines of ECSS-Q-70B.

6.3.1.1 SELECTION OF MATERIAL AND MECHANICAL PART ON BASIS OF PREVIOUS USE

[R]

Selection of material and mechanical parts on basis of previous use shall be made following the guidelines of ECSS-Q-70B

6.3.1.1.1.1 STRESS CORROSION

[R]

Section 5.1 of ECSS-Q-70B shall be applicable

6.3.1.1.1.2 FLAMMABILITY

[R]

Section 5.1 of ECSS-Q-70B shall be applicable

6.3.1.1.1.3 OUTGASSING

[R]

Section 5.1 of ECSS-Q-70B shall be applicable

6.3.1.1.1.4 THERMAL CYCLING

[R]

Section 5.1 of ECSS-Q-70B shall be applicable

6.3.1.1.1.5 RADIATION

[R/A]

Section 5.1 of ECSS-Q-70B shall be applicable

6.3.1.1.1.6 ATOMIC OXYGEN

[R/A]

Section 5.1 of ECSS-Q-70B shall be applicable

Questo doPDSmento contiene informazioni di proprietà di CARLO GAVAZZI SPACE SpA. Tutti i diritti sono riservati.
All information contained in this doPDSment are property of CARLO GAVAZZI SPACE SpA. All right reserved.

7. VERIFICATION REQUIREMENTS

7.1 GENERAL

This section defines applicable terminology attendant to the verification process, and constraints imposed on verification requirements. For each requirement is reported the required verification methods.

The method symbology is as follows:

NA = Not Applicable, information only;

R = Review of Design.

A = Analysis;

T = Test;

I = Inspection;

A combination of methods may be applied to a single paragraph to insure its complete verification.

7.1.1 TEST

The Test is a method of verification in which technical means, such as the use of special equipment, instrumentation, simulation techniques and the application of established principles and procedures are used to determine compliance with requirements. The analysis of the data derived from tests is an integral part of the test program.

The test method is preferred when it is feasible, unless one of the other methods can establish a sufficient level of confidence whilst being cost and schedule effective.

7.1.2 ANALYSIS

Analysis is used for verification in lieu of, in combination with, or in support to test to verify requirements.

The selected techniques may typically include system engineering analyses, statistics, qualitative analyses, modelling and computer simulations.

Since similarity needs first an engineering analysis, verification by similarity is included in this verification method. It is used if it can be shown that the article is similar to another article that has already been qualified to equivalent or more stringent criteria.

7.1.3 REVIEW OF DESIGN

The Review of Design is the verification by validation of previous records, certifications, etc. or by evidence of validated design documents, approved design reports, technical descriptions, engineering drawings, etc., showing unambiguously that the requirements are satisfied.

Questo doPDSmento contiene informazioni di proprietà di CARLO GAVAZZI SPACE SpA. Tutti i diritti sono riservati.
All information contained in this doPDSment are property of CARLO GAVAZZI SPACE SpA. All right reserved.

7.1.4 INSPECTION

The Inspection is a method of verification that determines conformance to requirements without the use of special laboratory equipment, procedures, test support items or services. Inspection uses standard quality control methods to verify compliance with requirements of construction features, workmanship standards and physical condition.

Emphasis is on observation of physical characteristics rather than performance.

7.2 VERIFICATION CONTROL DOCUMENT

The VCD shall be filled indicating for each specification requirement:

- the verification method at the applicable level;
- the applicable execution document (specification, procedure, standard, etc.);
- the verification reporting document (Test Report, Analysis Report, Review of Design Report, Inspection Report);
- the approval/waivers/comments as required;
- the acronym of the item the verification refers to, when lower level verification is required to verify that requirement;
- the model on which the verification has been performed (e.g. EM or PFM).

7.3 VERIFICATION LEVEL

Requirement verification is performed at the following level:

- Equipment

Questo doPDSmento contiene informazioni di proprietà di CARLO GAVAZZI SPACE SpA. Tutti i diritti sono riservati.
All information contained in this doPDSment are property of CARLO GAVAZZI SPACE SpA. All right reserved.

8. PREPARATION FOR DELIVERY

8.1 PDS TRANSPORT CONTAINER

8.1.1 CHARACTERISTICS

[R]

The dedicated PDS transport container shall be provided with the following characteristics:

- temperature level shall be maintained in the -30°C ÷ 70°C temperature range.
- shock sensors.

8.2 FLIGHT HARDWARE IDENTIFICATION MARKING

8.2.1 NAMEPLATES AND PRODUCT MARKING

[R]

All the parts/items, including spares, shall be univocally and permanently identified according to the following techniques.

8.2.1.1 PRODUCT MARKING

[R/I]

The level of Product Identification shall be requested for those items, which shall be:

1) Classified as "Configuration Item"
2) Classified as "Critical Item"
3) Normally subject to removal, replacement or repair.

8.2.1.2 CONFIGURATION ITEM IDENTIFICATION

[R/I]

The PDS parts classified as configuration items shall be supplied with a label where item characteristics are reported.

8.2.1.3 LOCATION

[R/I]

Label and marking positioning shall be as defined on the top assembly drawing of the item and the applicable "Part drawing" respectively.

Questo doPDSmento contiene informazioni di proprietà di CARLO GAVAZZI SPACE SpA. Tutti i diritti sono riservati.
All information contained in this doPDSment are property of CARLO GAVAZZI SPACE SpA. All right reserved.

8.2.1.4 MARKING TECHNIQUES

[R]

Marking techniques shall not degrade the structural integrity of the item.

8.2.1.5 LABELLING

[R/I]

Connectors shall be clearly identified. Methods, including durable strips, arrows or other indication, shall be used to show the positions of alignment pins or the direction of proper insertion.

Questo doPDSmento contiene informazioni di proprietà di CARLO GAVAZZI SPACE SpA. Tutti i diritti sono riservati.
All information contained in this doPDSment are property of CARLO GAVAZZI SPACE SpA. All right reserved.

8.3 PACKAGING AND HANDLING

8.3.1 GENERAL

[R/I]

Packaging and handling shall be performed in accordance with the guidelines of AMS-02 payload.

8.3.2 SEALING

[R/I]

To maintain specified environmental conditions, the commercial packaging shall be sealed with wrapping material and drying agents shall be included for initial moisture absorption (up to 3 months).

All packaging activities shall be performed in accordance with applicable and released packaging instructions/procedures.

Questo doPDSmento contiene informazioni di proprietà di CARLO GAVAZZI SPACE SpA. Tutti i diritti sono riservati.
All information contained in this doPDSment are property of CARLO GAVAZZI SPACE SpA. All right reserved.

8.3.2.1 CONTAINERS LABELLING AND MARKING DATA

[R/I]

The marking of all containers shall include the following information:

- Gross weight loaded in lbs and kg
- Gross weight empty in lbs and kg
- overall volume in PDSbic ft and m^3
- overall dimensions in PDSbic ft and m^3
- Consignee and address of destination
- Shipper's address and origin of transportation
- Identification of contents
- Special markings and tags, if required
- "Re-usable container - Do not destroy" if applicable
- Cleanliness level
- Environmental requirements
- Package transportation orientation arrows
- Package date
- Location of data package
- Hazardous Category if applicable

Questo doPDSmento contiene informazioni di proprietà di CARLO GAVAZZI SPACE SpA. Tutti i diritti sono riservati.
All information contained in this doPDSment are property of CARLO GAVAZZI SPACE SpA. All right reserved.

8.4 HANDLING, TRANSPORTATION AND STORAGE

8.4.1 PROCEDURES/INSTRUCTIONS

[NA]

The handling and transportation of equipment from the contractor's site up to the arrival at the element AIV shall be accomplished in accordance with applicable and released handling and transportation procedures/ instructions.

8.4.2 TRANSPORTATION MODE

[R]

The flight hardware shall be transportable by road, sea and air.

8.4.3 PROTECTION OF HARDWARE

[I]

Transportation containers, packages and GSE shall protect the flight hardware items during transportation and storage such that environmental conditions of the above transportation modes do not degrade the physical and functional characteristics of the shipped items. The amount of silica gel inside the packaging shall be determined such that the humidity does not exceed the specified values during a storage period of up to three months after the delivery of the H/W

Questo doPDSmento contiene informazioni di proprietà di CARLO GAVAZZI SPACE SpA. Tutti i diritti sono riservati.
All information contained in this doPDSment are property of CARLO GAVAZZI SPACE SpA. All right reserved.