NOTES:

MATERIAL: MUMETAL SHEET 2mm SPEC. MIL-N-14411 Comp. 1

TREATMENT: Heat treatment after reworking

- 5 hours at 1050° C
- Cool in furnace to less than 300° C
- H2 atmosphere

REMOVE BURRS AND BREAK SHARP EDGES 0.5X45° ACC. TO DIN 6784

SURFACE TREATMENT: sandblasting on the inner surface

FLAG NOTES:

- 1 DRILL ACCORDING TO P/N 11-AMS02PDS-700.17

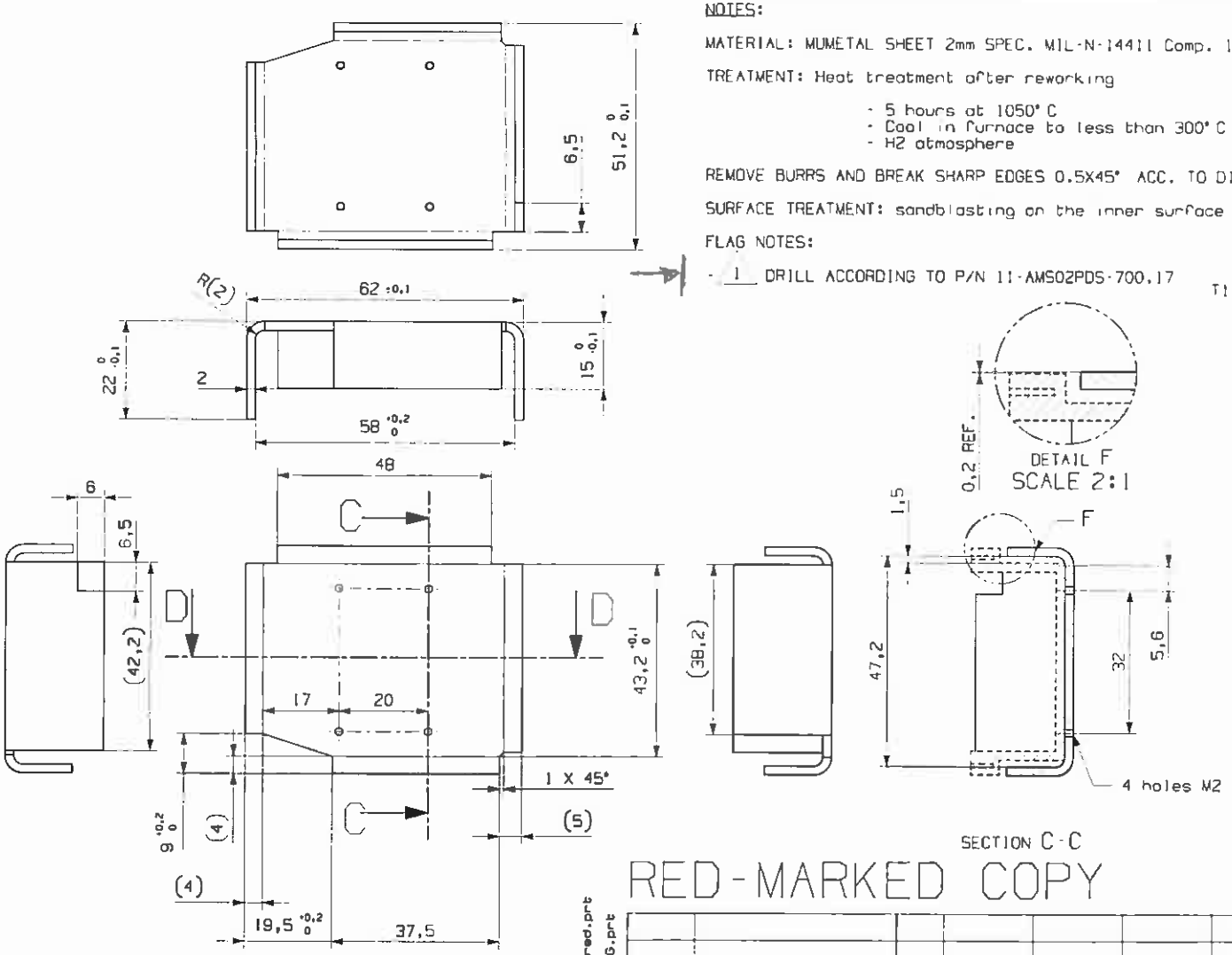

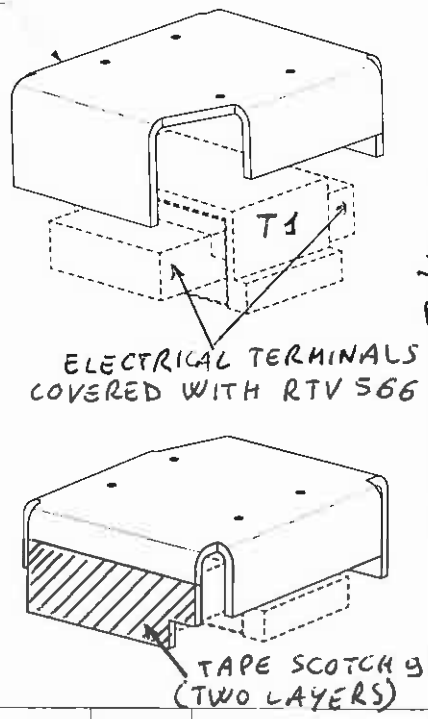

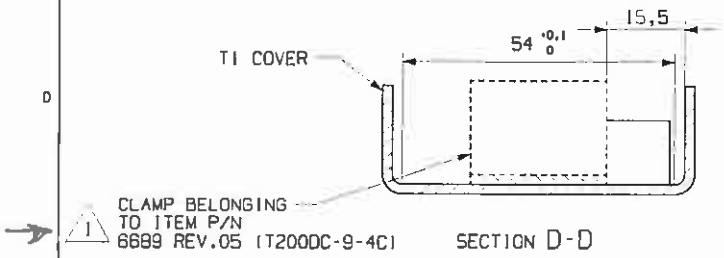

RED-MARKED COPY

REV	DRAWN	DATE	MEC CHECK	DATE	EL CHECK	DATE	SYST ENG	DATE	PA	DATE	CoC	DATE	CHANGE AUTHORITY
/	NAPOLI		DUCHINI		ALIA		ALIA		FRANCINI		CINQUEPALMI		

UNLESS OTHERWISE SPECIFIED DIMENSIONS AND TOLERANCES ARE IN mm

IDENTIFICATION MARKING PER

CARLO GAVAZZI SPACE

DRAWING TITLE: AMS02PDS PB2 BOARD T1 COVER

SCALE 1:1 | PROJECTION | GEN.TOLERANCES PER ISO 2768-mK | SPECIAL RA. √ √ √ | GEN.RA. 3.2 √

CARLO GAVAZZI

DASH NUMBER	NEXT ASSY	APPLICATION	SIZE	CAGE CODE	DRAWING NUMBER	REV	SHEET
N.A.	11-AMS02PDS-700		A3		11-AMS02PDS-700.17	/	1 OF 1

FILE MODEL: 090406_PB2_T1_covered.prt
FILE DRAWING: 090408_T1_cover_DWG.prt

THIS IS A CAD DRAWING NO MANUAL ALTERATION

ALL RIGHTS RESERVED COPYRIGHT ACC. TO DIN 34

ANNEX 5 TO NCR-PDS-CGS-C-136 1/2

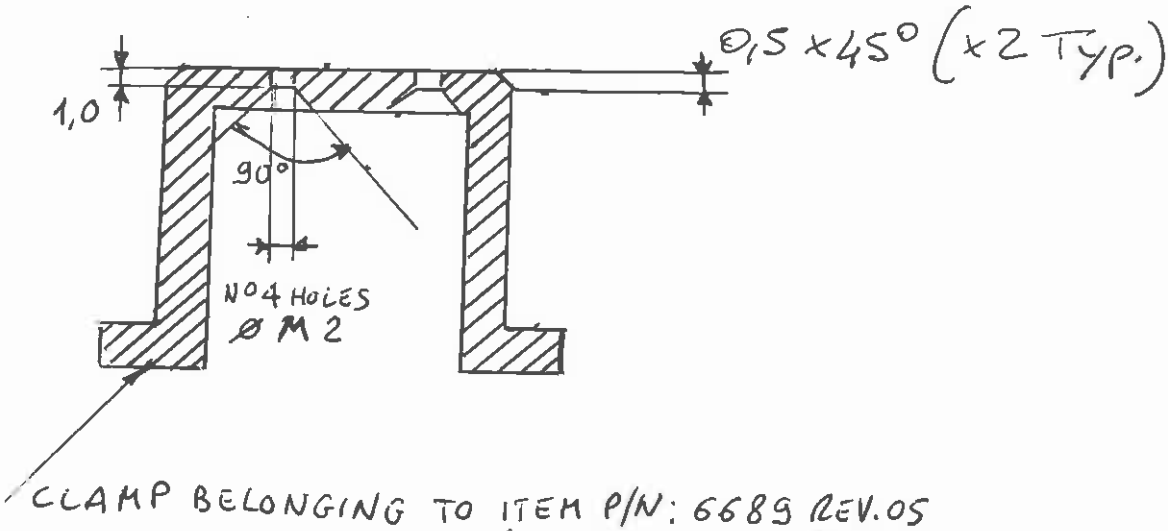

CLAMP BELONGING TO ITEM P/N: 6689 REV.05 (T200DC-9-4C)
PAYTON OF THE TRANSFORMER T1.

- MOUNT T1 COVER P/N: 11-AMS02PDS-700.17 REV./ ON REWORKED CLAMP PAYTON WITH 4 SCREWS M2x4 DIN965A A4 BOSSARD.
- GLUE T1 COVER P/N: 11-AMS02PDS-700.17 REV./ ON REWORKED CLAMP PAYTON WITH EC 2216 B/A 3M.
- APPLY ON T1 COVER P/N: 11-AMS02PDS-700.17 REV./ TWO LAYERS OF TAPE SCOTCH 92 (3M) AS INDICATED ON ANNEK S PAGE 1.
- COVER THE ELECTRICAL TERMINALS OF TRANSFORMER T1 WITH RTV S66 AS INDICATED IN ANNEX S PAGE 1.

L1.GER (Board layer 3) Scale=2.45 Tue Jun 09 13:23:28 2009

ANNEK T
TO NCR-PDS-CGS-C-136

1/1

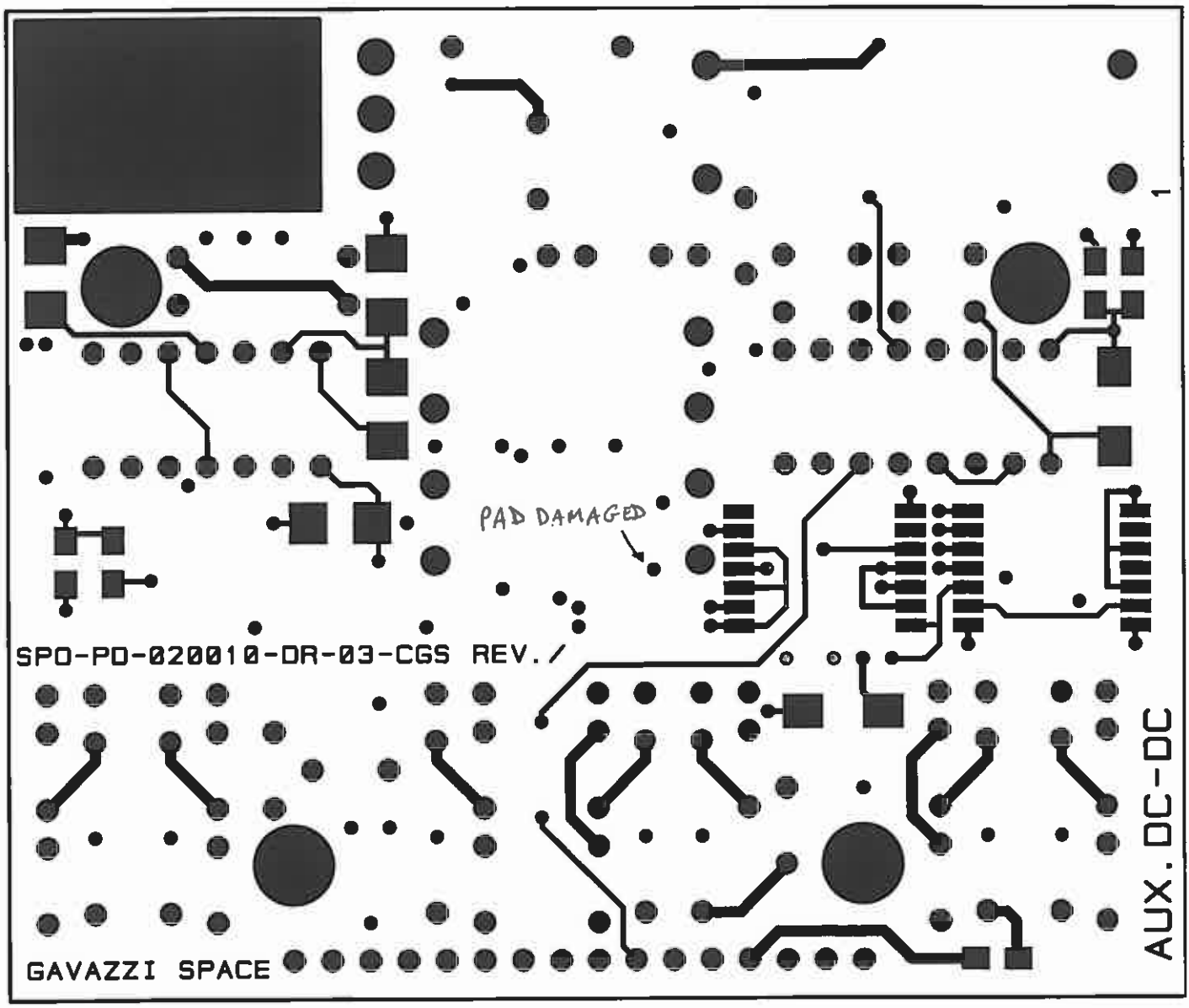

AMS-02 PDS Structural Verification for local magnetic shield introduction

1. ANALYSED CONFIGURTATION

The following pictures show the analysed configuration of the PDS. The modifications are:

- Non-structural mass of the boards updated (see table below)
- Covers added to the boards (shell elements, material MUMETALL)
- Covers linked by means of bar elements to the boards

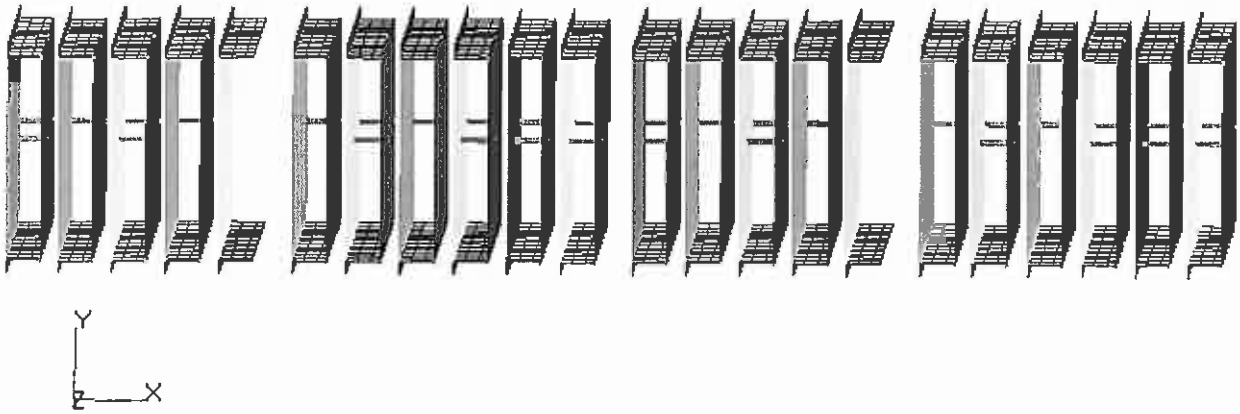

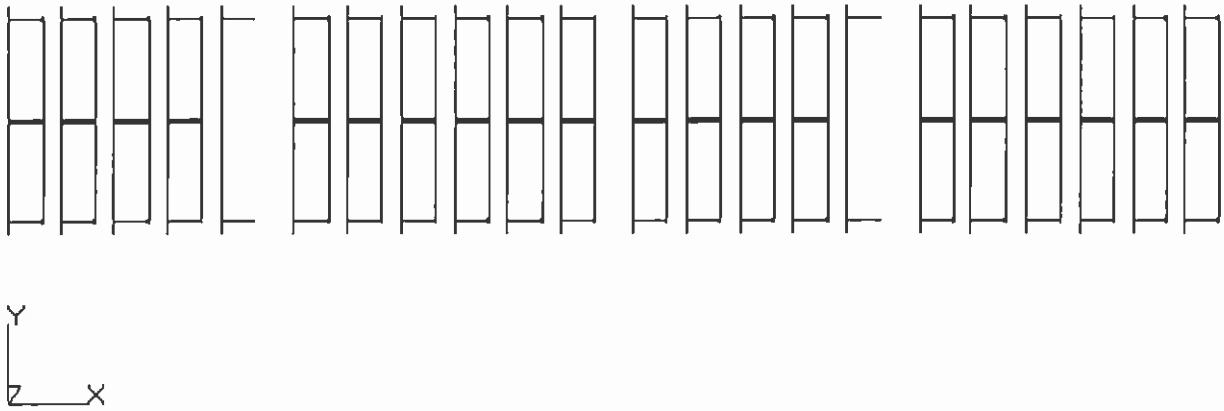

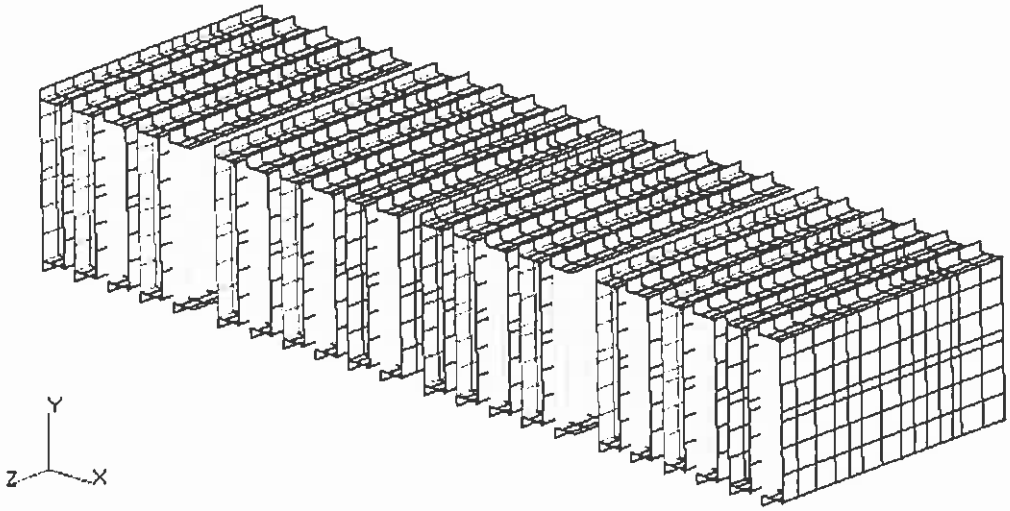

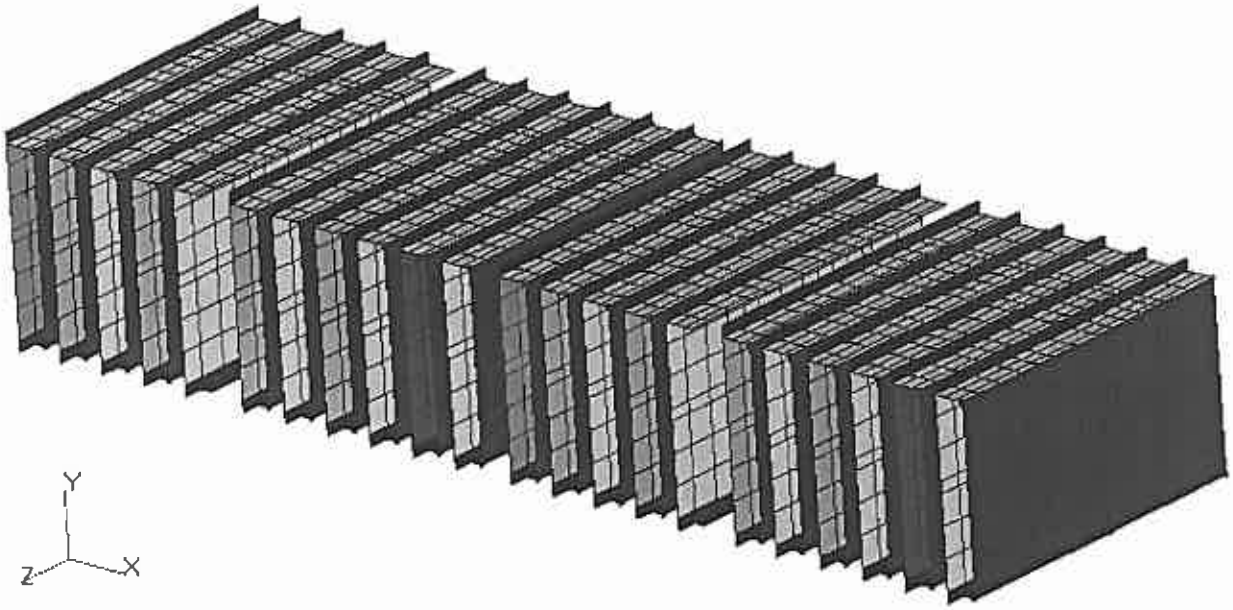
Y
Z
X

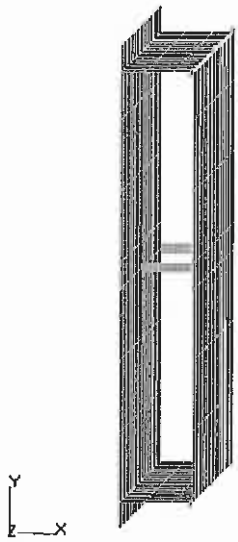
Y
Z
X

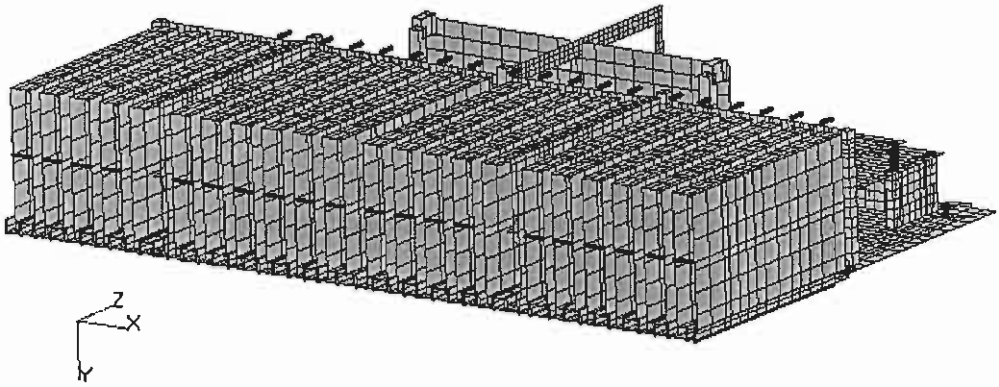
Z
X
Y

MATERIAL OF THE COVERS

Mumetall	
Source	www.vacuumschmelze.de
Mechanical Properties	
	[Mpa]
Fty	100
Fc	-
Fs	-
Fbru	-
Fbry	-
E	170000
Physical Properties	
ρ [kg/m3]	8700
ν [-]	0.3
CTE [$10^{-6}K^{-1}$]	13.5

Table 1-1 Mumetall properties

2. MASS BUDGET

The following table shows the mass budget of the added items.

Added mass					
ITEM	volume [cm3]	densita' [g/cm3]	massa unitaria [g]	quantita'	massa totale [g]
PB2_Cover (Scheda)	32.36818183	8.70	281.6031819	8	2252.825455
ESEM_Cover (Scheda)	32.20798068	8.70	280.2094319	12	3362.513183
T1 Cover Type "C1" - 2mm	11.03526438	8.70	96.00680008	8	768.0544006
DCDC_AUX_Cover	2.341766938	8.70	20.37337236	20	407.4674472
E1A_TRF_2-4_Cover	4.030589939	8.70	35.06613247	4	140.2645299
ESEM_Cover_Spacer	0.634169715	2.77	1.756650111	24	42.15960265
ESEM_Cover_Spacer_E4	0.044409554	2.77	0.123014465	8	0.984115717
Din965A_M2.5x4mm	0.023674318	7.83064	0.185385061	152	28.17852934
Din965A_M2.5x8mm	0.043309272	7.83064	0.339139318	8	2.713114542
Adesivo	-	-	-	-	-
				TOTALE MASSA AGGIUNTA	7005.160378

Mass budged of the added items

The new nonstructural mass (and its calculation) is listed hereafter.

Board	1	2	3	4	5	6	7	8	9	10	11
Property Name	pshell.48	pshell.50	pshell.49	pshell.50	pshell.49	pshell.50	pshell.49	pshell.50	pshell.49	pshell.52	pshell.51
NSM_old	2.17E+01	4.70E+01	1.95E+01	4.70E+01	1.95E+01	4.70E+01	1.95E+01	4.70E+01	1.95E+01	2.32E+01	9.76E+00
V [m^3]	2.76E-02	2.76E-02	2.76E-02	2.76E-02	2.76E-02	2.76E-02	2.76E-02	2.76E-02	2.76E-02	2.76E-02	2.76E-02
m_1 (DCDC_aux_cover)	2.04E-02	2.04E-02	2.04E-02	2.04E-02	2.04E-02	2.04E-02	2.04E-02	2.04E-02	2.04E-02	0.00E+00	2.04E-02
m_2 (T1Cover)	0.00E+00	9.60E-02	0.00E+00	9.60E-02	0.00E+00	9.60E-02	0.00E+00	9.60E-02	0.00E+00	0.00E+00	0.00E+00
m_3 (E1A_TRF)	0.00E+00	0.00E+00	0.00E+00	0.00E+00	0.00E+00	0.00E+00	0.00E+00	0.00E+00	0.00E+00	7.01E-02	0.00E+00
m_4 (ESEM_Cover_Spacer)	3.51E-03	0.00E+00	3.51E-03	0.00E+00	0.00E+00	0.00E+00	3.51E-03	0.00E+00	3.51E-03	3.51E-03	3.51E-03
m_5 (ESEM_Cover_Spacer_E4)	0.00E+00	1.23E-04	0.00E+00	1.23E-04	0.00E+00	1.23E-04	0.00E+00	1.23E-04	0.00E+00	0.00E+00	0.00E+00
m_6 (Din965A_M2.5x4mm)	1.48E-03	1.30E-03	1.48E-03	1.30E-03	0.00E+00	1.30E-03	1.48E-03	1.30E-03	1.48E-03	1.48E-03	1.48E-03
m_7 (Din965A_M2.5x8mm)	0.00E+00	3.39E-04	0.00E+00	3.39E-04	0.00E+00	3.39E-04	0.00E+00	3.39E-04	0.00E+00	0.00E+00	0.00E+00
m_8	0.00E+00	0.00E+00	0.00E+00	0.00E+00	0.00E+00	0.00E+00	0.00E+00	0.00E+00	0.00E+00	0.00E+00	0.00E+00
m_9	0.00E+00	0.00E+00	0.00E+00	0.00E+00	0.00E+00	0.00E+00	0.00E+00	0.00E+00	0.00E+00	0.00E+00	0.00E+00
NSM_new	2.26E+01	5.13E+01	2.04E+01	5.13E+01	2.03E+01	5.13E+01	2.04E+01	5.13E+01	2.04E+01	2.59E+01	1.07E+01
New_Property Name					Board_w_o_shield						

Board	12	13	14	15	16	17	18	19	20	21	22
Property Name	pshell.48	pshell.50	pshell.49	pshell.50	pshell.49	pshell.50	pshell.49	pshell.50	pshell.49	pshell.52	pshell.51
NSM_old	2.17E+01	4.70E+01	1.95E+01	4.70E+01	1.95E+01	4.70E+01	1.95E+01	4.70E+01	1.95E+01	2.32E+01	9.76E+00
V [m^3]	2.76E-02	2.76E-02	2.76E-02	2.76E-02	2.76E-02	2.76E-02	2.76E-02	2.76E-02	2.76E-02	2.76E-02	2.76E-02
m_1 (DCDC_aux_cover)	2.04E-02	2.04E-02	2.04E-02	2.04E-02	2.04E-02	2.04E-02	2.04E-02	2.04E-02	2.04E-02	0.00E+00	2.04E-02
m_2 (T1Cover)	0.00E+00	9.60E-02	0.00E+00	9.60E-02	0.00E+00	9.60E-02	0.00E+00	9.60E-02	0.00E+00	0.00E+00	0.00E+00
m_3 (E1A_TRF)	0.00E+00	0.00E+00	0.00E+00	0.00E+00	0.00E+00	0.00E+00	0.00E+00	0.00E+00	0.00E+00	7.01E-02	0.00E+00
m_4 (ESEM_Cover_Spacer)	3.51E-03	0.00E+00	3.51E-03	0.00E+00	0.00E+00	0.00E+00	3.51E-03	0.00E+00	3.51E-03	3.51E-03	3.51E-03
m_5 (ESEM_Cover_Spacer_E4)	0.00E+00	1.23E-04	0.00E+00	1.23E-04	0.00E+00	1.23E-04	0.00E+00	1.23E-04	0.00E+00	0.00E+00	0.00E+00
m_6 (Din965A_M2.5x4mm)	1.48E-03	1.30E-03	1.48E-03	1.30E-03	0.00E+00	1.30E-03	1.48E-03	1.30E-03	1.48E-03	1.48E-03	1.48E-03
m_7 (Din965A_M2.5x8mm)	0.00E+00	3.39E-04	0.00E+00	3.39E-04	0.00E+00	3.39E-04	0.00E+00	3.39E-04	0.00E+00	0.00E+00	0.00E+00
m_8	0.00E+00	0.00E+00	0.00E+00	0.00E+00	0.00E+00	0.00E+00	0.00E+00	0.00E+00	0.00E+00	0.00E+00	0.00E+00
m_9	0.00E+00	0.00E+00	0.00E+00	0.00E+00	0.00E+00	0.00E+00	0.00E+00	0.00E+00	0.00E+00	0.00E+00	0.00E+00
NSM_new	2.26E+01	5.13E+01	2.04E+01	5.13E+01	2.03E+01	5.13E+01	2.04E+01	5.13E+01	2.04E+01	2.59E+01	1.07E+01
New_Property Name					Board_w_o_shield						

New non-structural mass of the boards

MATHEMATICAL MODEL VERIFICATION RESULTS
MASS PROPERTIES, FREE-FREE MODES, HARDMOUNTED MODES

MODEL FILE NAMES
PDS_Only_09_04_22.bdf

RUN FILE NAMES
AMS_02_PDS_MODAL_090422.dat, AMS_02_PDS_MODAL_FREE_090422.dat, param.blk

MODEL UNITS
Length=m, mass=Kg, density=Kg/m^3, Young mod.=N/m^2, Stress=N/m^2, Deformation=m, Strain En=N*m=Joule.

PARAMETERS:	
PARAM,POST,0	PARAM,PRGPST,NO
PARAM,PRTMAXIM,YES	PARAM,COUPMASS,1
PARAM,AUTOSPC,YES	PARAM,GRDPNT,0
PARAM,NOCOMPS,0	PARAM,K6ROT,1.
	PARAM,WTMASS,1.

MASS PROPERTIES

```
O U T P U T   F R O M   G R I D   P O I N T   W E I G H T   G E N E R A T O R
                          REFERENCE POINT =        0
                                   M O
*  5.505838E+01 -1.363614E-17  9.462734E-18  3.124276E-18 -4.749627E+01 -9.185211E+01 *
* -1.363614E-17  5.505838E+01  4.175410E-18  4.749627E+01  1.233156E-17 -2.112522E-01 *
*  9.462734E-18  4.175410E-18  5.505838E+01  9.185211E+01  2.112522E-01 -1.545544E-17 *
*  3.124276E-18  4.749627E+01  9.185211E+01  1.953836E+02  3.516305E-01 -2.047185E-01 *
* -4.749627E+01  1.233156E-17  2.112522E-01  3.516305E-01  4.487585E+01  7.920004E+01 *
* -9.185211E+01 -2.112522E-01 -1.545544E-17 -2.047185E-01  7.920004E+01  1.562320E+02 *
                                    S
                  *  1.000000E+00  0.000000E+00  0.000000E+00 *
                  *  0.000000E+00  1.000000E+00  0.000000E+00 *
                  *  0.000000E+00  0.000000E+00  1.000000E+00 *
                                  DIRECTION
MASS AXIS SYSTEM (S)      MASS        X-C.G.        Y-C.G.        Z-C.G.
          X           5.505838E+01  5.674478E-20  1.668267E+00 -8.626528E-01
          Y           5.505838E+01 -3.836875E-03  2.239724E-19 -8.626528E-01
          Z           5.505838E+01 -3.836875E-03  1.668267E+00 -2.807100E-19
                                   I(S)
                  *  1.176880E+00  7.945339E-04  2.248125E-02 *
                  *  7.945339E-04  3.902257E+00  3.644146E-02 *
                  *  2.248125E-02  3.644146E-02  2.997288E+00 *
                                   I(Q)
                  *  2.996101E+00                            *
                  *                1.176602E+00              *
                  *                             3.903722E+00 *
                                    Q
                  *  1.236425E-02 -9.999236E-01  4.003397E-05 *
                  * -4.016759E-02 -4.566753E-04  9.991928E-01 *
                  * -9.991165E-01 -1.235588E-02 -4.017016E-02 *
```

mass of new FE model

RIGID BODY NORMAL MODE CHECK

R E A L E I G E N V A L U E S

MODE NO.	EXTRACTION ORDER	EIGENVALUE	RADIANS	CYCLES	GENERALIZED MASS	GENERALIZED STIFFNESS
1	1	-1.478229E-07	3.844774E-04	6.119148E-05	1.000000E+00	-1.478229E-07
2	2	8.762512E-07	9.360829E-04	1.489822E-04	1.000000E+00	8.762512E-07
3	3	1.674626E-06	1.294073E-03	2.059582E-04	1.000000E+00	1.674626E-06
4	4	2.145641E-06	1.464801E-03	2.331303E-04	1.000000E+00	2.145641E-06
5	5	3.318520E-06	1.821680E-03	2.899294E-04	1.000000E+00	3.318520E-06
6	6	6.524172E-06	2.554246E-03	4.065208E-04	1.000000E+00	6.524172E-06
7	7	3.170612E+05	5.630819E+02	8.961727E+01	1.000000E+00	3.170612E+05

HARDMOUNTED NORMAL MODE CHECK

MODE NO.	EXTRACTION ORDER	EIGENVALUE	RADIANS	CYCLES	GENERALIZED MASS	GENERALIZED STIFFNESS
1	1	3.142255E+05	5.605582E+02	8.921561E+01	1.000000E+00	3.142255E+05
2	2	3.171296E+05	5.631426E+02	8.962693E+01	1.000000E+00	3.171296E+05
3	3	3.172121E+05	5.632158E+02	8.963858E+01	1.000000E+00	3.172121E+05
4	4	3.172722E+05	5.632692E+02	8.964708E+01	1.000000E+00	3.172722E+05
5	5	3.173112E+05	5.633038E+02	8.965259E+01	1.000000E+00	3.173112E+05
6	6	3.173214E+05	5.633129E+02	8.965402E+01	1.000000E+00	3.173214E+05
7	7	3.176708E+05	5.636229E+02	8.970338E+01	1.000000E+00	3.176708E+05
8	8	3.177343E+05	5.636793E+02	8.971234E+01	1.000000E+00	3.177343E+05
9	9	4.666543E+05	6.831210E+02	1.087221E+02	1.000000E+00	4.666543E+05
10	10	4.667445E+05	6.831870E+02	1.087326E+02	1.000000E+00	4.667445E+05

FEM mass properties, free-free modes, hard mounted modes

3. STRESS ANALYSIS OF THE COVERS

The worst condition is for **ELEMENT 13384257** for **Load Case 1024** at **Layer Z2**.
The resulting Von Mises stress is: $\mathbf{f_{VM} = 10.53\ MPa}$.
Following figures show stress distribution for this subcase.

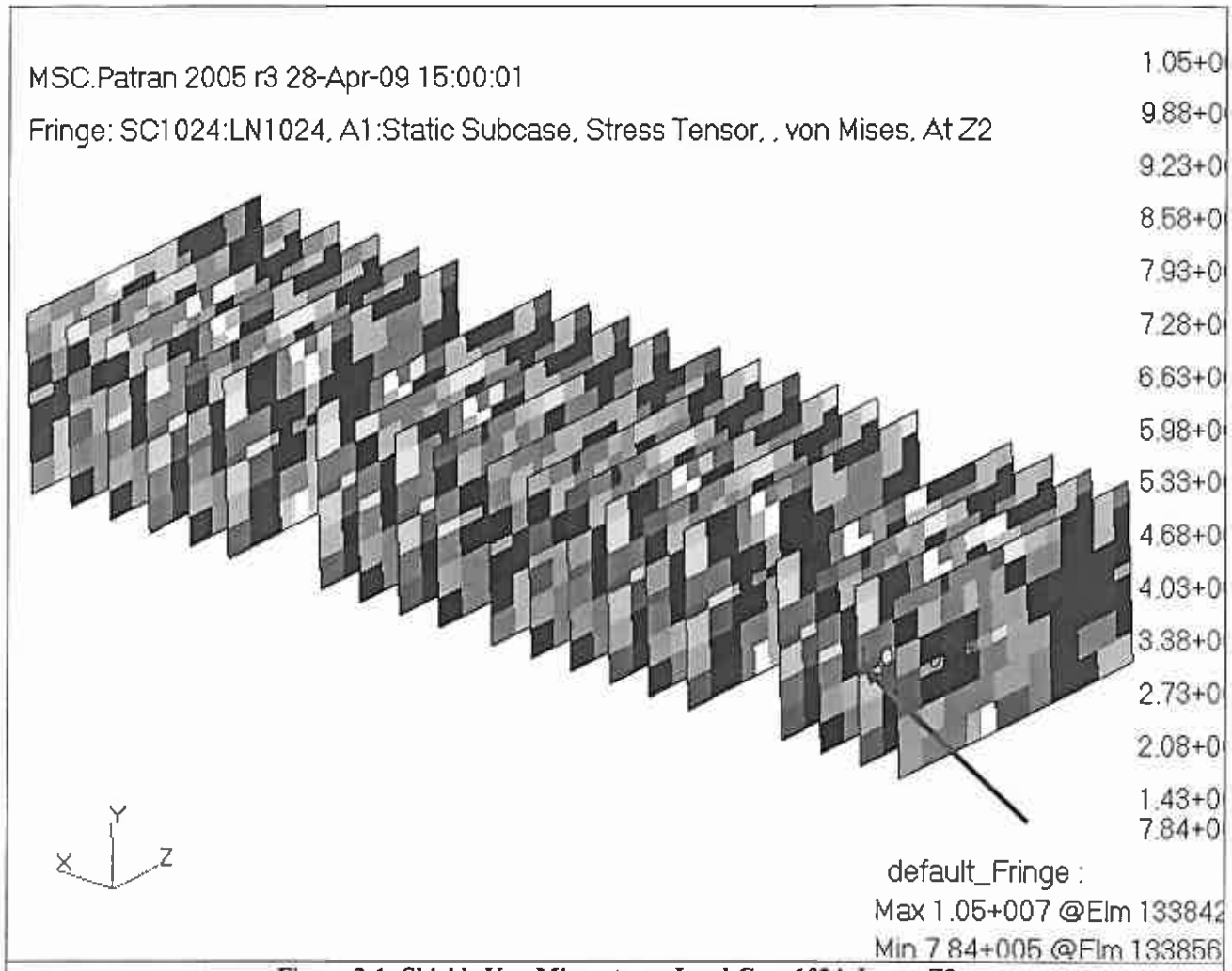

Figure 3-1: Shields Von Mises stress, Load Case 1024, Layer Z2

4. MARGINS OF SAFETY FOR STRESS ANALYSIS

In the following chapters the summary of the MoS for the strength verification in both test and flight configuration:

4.1 MARGINS OF SAFETY IN TEST CONFIGURATION

In the following table MoS of the entire structure are shown:

MARGINS OF SAFETY FOR STRENGHT FAILURE												
ITEM	PART NUMBER	LC	EID	MATERIAL	F_{ty} [MPa]	F_{tu} [MPa]	Limit stress [MPa]	$S.F._y$	$S.F._u$	MoS_y	MoS_u	NOTES
STRUCTURE (shell)	10-AMS02PDS-000.04 10-AMS02PDS-200.00 10-AMS02PDS-300.00 11-AMS02PDS-100.05 10-AMS02PDS-000.12 10-AMS02PDS-100.00 10-AMS02PDS-000.07 10-AMS02PDS-000.08 10-AMS02PDS-000.09 10-AMS02PDS-100.10 10-AMS02PDS-100.11 11-AMS02PDS-200.00 10-AMS02PDS-000.14	9 (At Z2)	24656	AL 7075 T7351	369	440	82.5	1.25	2	>2	1.67	VM
STRUCTURE (bars)		9	10693	AL 7075 T7351	369	440	64.6	1.25	2	>2	>2	MC
ELECTRONICS	11-AMS02PDS-700.00 11-AMS02PDS-300.00 11-AMS02PDS-400.00 11-AMS02PDS-500.00 11-AMS02PDS-600.00 11-AMS02PDS-200.00 11-AMS02PDS-800.00	11 (At Z1)	24890	Polyimide	-	190	15.0	1.25	2	-	>2	VM
SHIELDS		3 (At Z2)	13385433	MUMETALL	94	-	37.1	1.25	2	1.03	-	VM
VM = Von Mises, MC = Maximum combined												

Table 4-1: MOS summary for test configuration

4.2 MARGINS OF SAFETY IN FLIGHT CONFIGURATION

In the following table MoS of the entire structure are shown:

MARGINS OF SAFETY FOR STRENGHT FAILURE (PDS)												
ITEM	PART NUMBER	LC	EID	MATERIAL	F_{ty} [MPa]	F_{tu} [MPa]	Limit stress [MPa]	$S.F_{ty}$	$S.F_{tu}$	MoS_y	MoS_u	NOTES
STRUCTURE (shell)	10-AMS02PDS-000.04 10-AMS02PDS-200.00 10-AMS02PDS-300.00 11-AMS02PDS-100.05 10-AMS02PDS-000.12 10-AMS02PDS-100.00 10-AMS02PDS-000.07 10-AMS02PDS-000.08 10-AMS02PDS-000.09 10-AMS02PDS-100.10 10-AMS02PDS-100.11 11-AMS02PDS-200.00 10-AMS02PDS-000.14	2031 (At Z2)	25828	AL 7075 T7351	369	440	65.3	1.25	2	>2	>2	VM
STRUCTURE (bars)		2031	12604	AL 7075 T7351	369	440	18.8	1.25	2	>2	>2	MC
ELECTRONICS	11-AMS02PDS-700.00 11-AMS02PDS-300.00 11-AMS02PDS-400.00 11-AMS02PDS-500.00 11-AMS02PDS-600.00 11-AMS02PDS-200.00 11-AMS02PDS-800.00	1024 (At Z2)	22259	Polyimide	-	190	4.0	1.25	2	-	>2	VM
SHIELDS		1024 (At Z2)	13384257	MUMETALL	94	-	10.5	1.25	2	>2	-	VM

VM = Von Mises, MC = Maximum combined

Table 4-2: MOS summary for flight configuration

MARGINS OF SAFETY FOR STRENGHT FAILURE (Links)												
ITEM	PART NUMBER	LC	EID	MATERIAL	F_{ty} [MPa]	F_{tu} [MPa]	Limit stress [MPa]	$S.F._y$	$S.F._u$	MoS_y	MoS_u	NOTES
Links		2032 (At Z1)	4156167	AL 7075 T7351	369	440	216.12	1.25	2	0.37	0.02	VM

MARGINS OF SAFETY FOR STRENGHT FAILURE (Radiator skin)												
ITEM	PART NUMBER	LC	EID	MATERIAL	F_{ty} [MPa]	F_{tu} [MPa]	Limit stress [MPa]	$S.F._y$	$S.F._u$	MoS_y	MoS_u	NOTES
Main Radiator Panels Skin		2032 (At L3)	621659	AL 2024 T81	399.9	461.95	62.92	1.25	2	>2	>2	VM

Failure Index radiator (Radiator Core and Bonding)				
ITEM	LC	EID	MATERIAL	Failure Index
Main Radiator Panels Core	1004 (At L2)	623325	ROHACELL	0.0684
Main Radiator Panels Bonding	2012 (At L1)	653813	REUDX 312	0.0102

5. JOINTS MOS IN TEST CONFIGURATION

5.1 JOINT 1 (TEST)

JUNCTION PROPERTIES	
BOLT	NAS1351N3
WASHER 1	NA
WASHER 2	NA
NUT	MS21060L3
INSERT	NA
INSERT IN FLANGE	2
NUMBER OF FLANGES	2
LUBRICATED	YES
FLANGE 1 NAME	INSERT_TYPE_B
FLANGE 1 MATERIAL	AL7075 T7351
FLANGE 1 MATERIAL SPEC	AMS-QQ-A-225/9
FLANGE 1 THICKNESS [in]	NA
FLANGE 1 HOLE DIAMETER [in]	0 21
FLANGE 2 NAME	BASEPLATE
FLANGE 2 MATERIAL	AL7075 T7351
FLANGE 2 MATERIAL SPEC	AMS-QQ-A-250/12
FLANGE 2 THICKNESS [in]	0.118
FLANGE 2 HOLE DIAMETER [in]	0.21

LOADS	
MAX AXIAL - CONFIGURATION ID	NOMINAL
MAX AXIAL - ELEMENT ID	10011
MAX AXIAL - LOAD CASE ID	16
MAX AXIAL - AXIAL LOAD [lb]	230 1
max axial - axial load [N]	1023 4
MAX AXIAL - SHEAR LOAD [lb]	10 0
max axial - shear load [N]	44 4
MAX SHEAR - CONFIGURATION ID	NOMINAL
MAX SHEAR - ELEMENT ID	10021
MAX SHEAR - LOAD CASE ID	20
MAX SHEAR - AXIAL LOAD [lb]	51 2
max shear - axial load [N]	227 3
MAX SHEAR - SHEAR LOAD [lb]	114 6
max shear - shear load [N]	509 5
MAX COMBINED - CONFIGURATION ID	NOMINAL
MAX COMBINED - ELEMENT ID	SAME AS MAX AXIAL
MAX COMBINED - LOAD CASE ID	
MAX COMBINED - AXIAL LOAD [lb]	
max combined - axial load [N]	
MAX COMBINED - SHEAR LOAD [lb]	
max combined - shear load [N]	

FACTORS OF SAFETY	
ULTIMATE (for nominal configuration)	2 0
ULTIMATE (for fail safe configuration)	1 0
YIELD (only for nominal configuration)	1.25
JOINT SEPARATION (for nominal configuration)	1.2
JOINT SEPARATION (for fail safe configuration)	1.0
FITTING FACTOR	1 15

BOLT & INSERT DATA	
NOMINAL DIAMETER OF BOLT [in]	0.19
NUMBER OF THREADS/INCH (1/in)	32
TOTAL LENGHT OF BOLT [in]	0.5
LENGHT OF INSERT [in]	NA
THREADED LENGHT [in]	0.5
MIN EXT DIAMETER OF INSERT [in]	NA
DEPTH OF RECESS FOR INSERT [in]	NA
HEIGHT OF NUT [in]	0 25

WASHER DATA	
THICKNESS OF WASHER [in]	NA
OUTER DIAMETER OF WASHER [in]	NA
INNER DIAMETER OF WASHER [in]	NA
BOLT HEAD DIAMETER [in]	NA

FLANGE DATA	
THICK OF FLANGE 1 [in]	NA
THICK OF FLANGE 2 [in]	0 118
DIAMETER OF HOLE [in]	0.21

BOLT MATERIAL PROPERTY DATA	
TEMP FACTOR FOR ULTIMATE STRENGHT	0.94
TEMP FACTOR FOR YIELD STRENGHT	0.94
ULTIMATE TENSILE ALLOWABLE STRESS [ksi]	160
YIELD TENSILE ALLOWABLE STRESS [ksi]	110
TEMP FACTOR FOR MODULUS	0.94
MODULUS OF ELASTICITY [ksi]	29100
THERMAL COEFF - HOT [1E(-6)/deg]	9.1
THERMAL COEFF - COLD [1E(-6)/deg]	7 8

INSERT MATERIAL PROPERTY DATA	
TEMP FACTOR FOR ULTIMATE STRENGHT	0.94
ULTIMATE TENSILE ALLOWABLE STRESS [ksi]	NA

NUT MATERIAL PROPERTY DATA	
TEMP FACTOR FOR ULTIMATE STRENGHT	0.94
TENSILE ULTIMATE ALLOWABLE STRESS [psi]	125000
ULTIMATE AXIAL LOAD [lb]	6470

WASHER MATERIAL PROPERTY DATA	
TEMP FACTOR FOR MODULUS	1
MODULUS OF ELASTICITY [ksi]	29100

FLANGE MATERIAL PROPERTY DATA	
TEMP FACTOR FOR MODULUS OF FLANGE 1	0 94
TEMP FACTOR FOR MODULUS OF FLANGE 2	0 94
TEMP FACTOR FOR ULTIMATE STRENGHT OF FLANGE 2	0 94
ULTIMATE SHEAR ALLOWABLE STRESS OF FLANGE 2 [psi]	NA
MODULUS OF ELASTICITY FOR FLANGE 1 [ksi]	10500
MODULUS OF ELASTICITY FOR FLANGE 2 [ksi]	10500
THERMAL COEFF OF FLANGE 1 - HOT [1E(-6)/deg]	12.15
THERMAL COEFF OF FLANGE 1 - COLD [1E(-6)/deg]	11 15
THERMAL COEFF OF FLANGE 2 - HOT [1E(-6)/deg]	12.15
THERMAL COEFF OF FLANGE 2 - COLD [1E(-6)/deg]	11.15
ULTIMATE BEARING ALLOWABLE STRESS FOR FLANGE 1 [psi]	NA
YIELD BEARING ALLOWABLE STRESS FOR FLANGE 1 [psi]	NA
ULTIMATE BEARING ALLOWABLE STRESS FOR FLANGE 2 [psi]	95870
YIELD BEARING ALLOWABLE STRESS FOR FLANGE 2 [psi]	74260

TORQUE AND PRELOAD DATA	
MAX TORQUE [lb in]	28 0
max torque [N m]	3 2
MIN TORQUE [lb in]	26.0
min torque [N m]	2 9
COEFFICIENT OF UTILIZATION [%]	64
LOADING PLANE FACTOR	0 5
PRELOAD UNCETRAINTY	0 25
TORQUE COEFFICIENT	0 15

SUMMARY OF MARGINS FOR BOLTS	
MOS CALCULATION - CONFIGURATION ID	NOMINAL
JOINT SEPARATION	1 38 (MAX AXIAL)
DIRECT TENSION ULTIMATE	4 47 (MAX AXIAL)
DIRECT TENSION YIELD	5 02 (MAX AXIAL)
TOTAL TENSION ULTIMATE	1 07 (MAX AXIAL)
TOTAL TENSION YIELD	0 47 (MAX AXIAL)
DIRECT THREAD SHEAR ULTIMATE	5 56 (MAX AXIAL)
TOTAL THREAD SHEAR ULTIMATE	1 49 (MAX AXIAL)
SHEAR ULTIMATE	5 (MAX SHEAR)
BENDING ULTIMATE	> 10
COMBINED SHEAR, TENSION AND BENDING ULTIMATE	1 07 (MAX AXIAL)
NOMINAL CONFIGURATION MINIMUM MOS	0 47
NOMINAL CONFIGURATION MINIMUM ULTIMATE MOS	1 07

NOMINAL CONFIGURATION SUMMARY OF MARGINS FOR BEARING FLANGES	
FLANGE 1 - BEARING ULTIMATE	NA
FLANGE 1 - BEARING YIELD	
FLANGE 2 - BEARING ULTIMATE	8 01
FLANGE 2 - BEARING YIELD	>10
NOMINAL CONFIGURATION MINIMUM MOS	8 01 (ULT-FL 2)

FAIL SAFE CONFIGURATION IDENTIFICATION	
FAIL SAFE FAILED BOLT CONFIGURATION	TEST FAIL SAFE
FAIL SAFE 1 FAILED BOLT ID	10011

FAIL SAFE CONFIGURATION BOLT LOADS	
MAX AXIAL - ELEMENT ID	10010
MAX AXIAL - LOAD CASE ID	15
MAX AXIAL - AXIAL LOAD [lb]	287.6
max axial - axial load [N]	1279 1
MAX AXIAL - SHEAR LOAD [lb]	26 9
max axial - shear load [N]	119.3
MAX SHEAR - ELEMENT ID	10030
MAX SHEAR - LOAD CASE ID	17
MAX SHEAR - AXIAL LOAD [lb]	-37 5
max shear - axial load [N]	-166 5
MAX SHEAR - SHEAR LOAD [lb]	125 4
max shear - shear load [N]	557 6
MAX COMBINED - LOAD CASE ID	SAME AS MAX AXIAL
MAX COMBINED - AXIAL LOAD [lb]	
max combined - axial load [N]	
MAX COMBINED - SHEAR LOAD [lb]	
max combined - shear load [N]	

FAIL SAFE CONFIGURATION SUMMARY OF MARGINS FOR BOLTS	
MOS CALCULATION - CONFIGURATION ID	TEST FAIL SAFE
JOINT SEPARATION	1 29 (MAX AXIAL)
DIRECT TENSION ULTIMATE	7 75 (MAX AXIAL)
TOTAL TENSION ULTIMATE	1.14 (MAX AXIAL)
DIRECT THREAD SHEAR ULTIMATE	9 5 (MAX AXIAL)
TOTAL THREAD SHEAR ULTIMATE	1 57 (MAX AXIAL)
SHEAR ULTIMATE	9 97 (MAX SHEAR)
BENDING ULTIMATE	> 10
COMBINED SHEAR, TENSION AND BENDING ULTIMATE	1 14 (MAX AXIAL)
FAIL SAFE CONFIGURATION MINIMUM ULTIMATE MOS	1.14

FAIL SAFE CONFIGURATION SUMMARY OF MARGINS FOR BEARING FLANGES	
FLANGE 1 - BEARING ULTIMATE	NA
FLANGE 2 - BEARING ULTIMATE	>10
FAIL SAFE CONFIGURATION MINIMUM MOS	>10

Table 5-1: Joint 1 nominal and fail safe analyses (test)

5.2 JOINT 2 (TEST)

JUNCTION PROPERTIES	
BOLT	NAS1352N08
WASHER 1	NAS620 C08
WASHER 2	NA
NUT	NA
INSERT	MS21209 C08-10
INSERT IN FLANGE	2
NUMBER OF FLANGES	2
LUBRICATED	NO
FLANGE 1 NAME	PDS WALLS
FLANGE 1 MATERIAL	Al7075T7351
FLANGE 1 MATERIAL SPEC	AMS-QQ-A-250/12
FLANGE 1 THICKNESS [in]	0 138
FLANGE 1 HOLE DIAMETER [in]	0 18
FLANGE 2 NAME	PDS WALLS
FLANGE 2 MATERIAL	Al7075T7351
FLANGE 2 MATERIAL SPEC	AMS-QQ-A-250/12
FLANGE 2 THICKNESS [in]	0 246
FLANGE 2 HOLE DIAMETER [in]	0 18

LOADS	
MAX AXIAL - CONFIGURATION ID	NOMINAL
MAX AXIAL - ELEMENT ID	12406
MAX AXIAL - LOAD CASE ID	24
MAX AXIAL - AXIAL LOAD [lb]	28 5
max axial - axial load [N]	126 4
MAX AXIAL - SHEAR LOAD [lb]	20 4
max axial - shear load [N]	90 3
MAX SHEAR - CONFIGURATION ID	NOMINAL
MAX SHEAR - ELEMENT ID	10114
MAX SHEAR - LOAD CASE ID	2
MAX SHEAR - AXIAL LOAD [lb]	4 7
max shear - axial load [N]	20 8
MAX SHEAR - SHEAR LOAD [lb]	159 9
max shear - shear load [N]	710 8
MAX COMBINED - CONFIGURATION ID	NOMINAL
MAX COMBINED - ELEMENT ID	SAME AS MAX SHEAR
MAX COMBINED - LOAD CASE ID	
MAX COMBINED - AXIAL LOAD [lb]	
max combined - axial load [N]	
MAX COMBINED - SHEAR LOAD [lb]	
max combined - shear load [N]	

FACTORS OF SAFETY	
ULTIMATE (for nominal configuration)	2 0
ULTIMATE (for fail safe configuration)	1 0
YIELD (only for nominal configuration)	1 25
JOINT SEPARATION (for nominal configuration)	1.2
JOINT SEPARATION (for fail safe configuration)	1 0
FITTING FACTOR	1 15

BOLT & INSERT DATA	
NOMINAL DIAMETER OF BOLT [in]	0 164
NUMBER OF THREADS/INCH [1/in]	32
TOTAL LENGHT OF BOLT [in]	0 5
LENGHT OF INSERT [in]	0 246
THREADED LENGHT [in]	0 5
MIN EXT DIAMETER OF INSERT [in]	0 205
DEPTH OF RECESS FOR INSERT [in]	0 02
HEIGHT OF NUT [in]	NA

WASHER DATA	
THICKNESS OF WASHER [in]	0.032
OUTER DIAMETER OF WASHER [in]	0 304
INNER DIAMETER OF WASHER [in]	0 169
BOLT HEAD DIAMETER [in]	0 27

FLANGE DATA	
THICK OF FLANGE 1 [in]	0 138
THICK OF FLANGE 2 [in]	0.246
DIAMETER OF HOLE [in]	0.18

BOLT MATERIAL PROPERTY DATA	
TEMP FACTOR FOR ULTIMATE STRENGHT	0 94
TEMP FACTOR FOR YIELD STRENGHT	0 94
ULTIMATE TENSILE ALLOWABLE STRESS [ksi]	160
YIELD TENSILE ALLOWABLE STRESS [ksi]	110
TEMP FACTOR FOR MODULUS	0 94
MODULUS OF ELASTICITY [ksi]	29100
THERMAL COEFF - HOT [1E(-6)/deg]	9 1
THERMAL COEFF - COLD [1E(-6)/deg]	7 8

INSERT MATERIAL PROPERTY DATA	
TEMP FACTOR FOR ULTIMATE STRENGHT	0.94
ULTIMATE TENSILE ALLOWABLE STRESS [ksi]	150

NUT MATERIAL PROPERTY DATA	
TEMP FACTOR FOR ULTIMATE STRENGHT	NA
TENSILE ULTIMATE ALLOWABLE STRESS [psi]	NA
ULTIMATE AXIAL LOAD [lb]	NA

WASHER MATERIAL PROPERTY DATA	
TEMP FACTOR FOR MODULUS	1
MODULUS OF ELASTICITY [ksi]	29100

FLANGE MATERIAL PROPERTY DATA	
TEMP FACTOR FOR MODULUS OF FLANGE 1	0 94
TEMP FACTOR FOR MODULUS OF FLANGE 2	0 94
TEMP FACTOR FOR ULTIMATE STRENGHT OF FLANGE 2	0 94
ULTIMATE SHEAR ALLOWABLE STRESS OF FLANGE 2 [psi]	27000
MODULUS OF ELASTICITY FOR FLANGE 1 [ksi]	10500
MODULUS OF ELASTICITY FOR FLANGE 2 [ksi]	10500
THERMAL COEFF OF FLANGE 1 - HOT [1E(-6)/deg]	12 15
THERMAL COEFF OF FLANGE 1 - COLD [1E(-6)/deg]	11.5
THERMAL COEFF OF FLANGE 2 - HOT [1E(-6)/deg]	12 15
THERMAL COEFF OF FLANGE 2 - COLD [1E(-6)/deg]	11 5
ULTIMATE BEARING ALLOWABLE STRESS FOR FLANGE 1 [psi]	85870
YIELD BEARING ALLOWABLE STRESS FOR FLANGE 1 [psi]	74260
ULTIMATE BEARING ALLOWABLE STRESS FOR FLANGE 2 [psi]	85870
YIELD BEARING ALLOWABLE STRESS FOR FLANGE 2 [psi]	74260

TORQUE AND PRELOAD DATA	
MAX TORQUE [lb in]	20 0
max torque [N m]	2 3
MIN TORQUE [lb in]	18 0
min torque [N m]	2 0
COEFFICIENT OF UTILIZATION [%]	63
LOADING PLANE FACTOR	0 5
PRELOAD UNCETRAINTY	0.35
TORQUE COEFFICIENT	0.2

SUMMARY OF MARGINS FOR BOLTS	
MOS CALCULATION - CONFIGURATION ID	NOMINAL
JOINT SEPARATION	7 02 (MAX AXIAL)
DIRECT TENSION ULTIMATE	29 71 (MAX AXIAL)
DIRECT TENSION YIELD	32 78 (MAX AXIAL)
TOTAL TENSION ULTIMATE	1 27 (MAX AXIAL)
TOTAL TENSION YIELD	0 565 (MAX AXIAL)
DIRECT THREAD SHEAR ULTIMATE	28 69 (MAX AXIAL)
TOTAL THREAD SHEAR ULTIMATE	1 19 (MAX AXIAL)
SHEAR ULTIMATE	1 93 (MAX SHEAR)
BENDING ULTIMATE	> 10
COMBINED SHEAR, TENSION AND BENDING ULTIMATE	0 933 (MAX SHEAR)
NOMINAL CONFIGURATION MINIMUM MOS	0 57
NOMINAL CONFIGURATION MINIMUM ULTIMATE MOS	0 93

NOMINAL CONFIGURATION SUMMARY OF MARGINS FOR BEARING FLANGES	
FLANGE 1 - BEARING ULTIMATE	5 48
FLANGE 1 - BEARING YIELD	7 03
FLANGE 2 - BEARING ULTIMATE	>10
FLANGE 2 - BEARING YIELD	>10
NOMINAL CONFIGURATION MINIMUM MOS	5 48 (ULT-FL 1)

FAIL SAFE CONFIGURATION IDENTIFICATION	
FAIL SAFE FAILED BOLT CONFIGURATION	TEST FAIL SAFE
FAIL SAFE 1 FAILED BOLT ID	10114

FAIL SAFE CONFIGURATION BOLT LOADS	
MAX AXIAL - ELEMENT ID	12406
MAX AXIAL - LOAD CASE ID	20
MAX AXIAL - AXIAL LOAD [lb]	28 4
max axial - axial load [N]	126 2
MAX AXIAL - SHEAR LOAD [lb]	20 3
max axial - shear load [N]	90 1
MAX SHEAR - ELEMENT ID	10115
MAX SHEAR - LOAD CASE ID	1
MAX SHEAR - AXIAL LOAD [lb]	4 6
max shear - axial load [N]	20 3
MAX SHEAR - SHEAR LOAD [lb]	198 3
max shear - shear load [N]	882 0
MAX COMBINED - LOAD CASE ID	SAME AS MAX SHEAR
MAX COMBINED - AXIAL LOAD [lb]	
max combined - axial load [N]	
MAX COMBINED - SHEAR LOAD [lb]	
max combined - shear load [N]	

FAIL SAFE CONFIGURATION SUMMARY OF MARGINS FOR BOLTS	
MOS CALCULATION - CONFIGURATION ID	TEST FAIL SAFE
JOINT SEPARATION	8 66 (MAX AXIAL)
DIRECT TENSION ULTIMATE	60 64 (MAX AXIAL)
TOTAL TENSION ULTIMATE	1 28 (MAX AXIAL)
DIRECT THREAD SHEAR ULTIMATE	58 59 (MAX AXIAL)
TOTAL THREAD SHEAR ULTIMATE	1 2 (MAX AXIAL)
SHEAR ULTIMATE	3 73 (MAX SHEAR)
BENDING ULTIMATE	> 10
COMBINED SHEAR, TENSION AND BENDING ULTIMATE	1 18 (MAX SHEAR)
FAIL SAFE CONFIGURATION MINIMUM ULTIMATE MOS	1 18

FAIL SAFE CONFIGURATION SUMMARY OF MARGINS FOR BEARING FLANGES	
FLANGE 1 - BEARING ULTIMATE	9 44
FLANGE 2 - BEARING ULTIMATE	>10
FAIL SAFE CONFIGURATION MINIMUM MOS	>10

Table 5-2: Joint 2 nominal and fail safe analyses (test)

5.3 JOINT 3 (TEST)

JUNCTION PROPERTIES	
BOLT	MS24671
WASHER 1	NA
WASHER 2	NA
NUT	NA
INSERT	MS21209 C08-10
INSERT IN FLANGE	2
NUMBER OF FLANGES	2
LUBRICATED	NO
FLANGE 1 NAME	PDS WALLS
FLANGE 1 MATERIAL	Al7075T7351
FLANGE 1 MATERIAL SPEC	AMS-QQ-A-250/12
FLANGE 1 THICKNESS [in]	0.138
FLANGE 1 HOLE DIAMETER [in]	0 18
FLANGE 2 NAME	PDS WALLS
FLANGE 2 MATERIAL	Al7075T7351
FLANGE 2 MATERIAL SPEC	AMS-QQ-A-250/12
FLANGE 2 THICKNESS [in]	0 246
FLANGE 2 HOLE DIAMETER [in]	0.18

LOADS	
MAX AXIAL - CONFIGURATION ID	NOMINAL
MAX AXIAL - ELEMENT ID	10100
MAX AXIAL - LOAD CASE ID	16
MAX AXIAL - AXIAL LOAD [lb]	99 9
max axial - axial load [N]	444 3
MAX AXIAL - SHEAR LOAD [lb]	102 4
max axial - shear load [N]	455 3
MAX SHEAR - CONFIGURATION ID	NOMINAL
MAX SHEAR - ELEMENT ID	10091
MAX SHEAR - LOAD CASE ID	9
MAX SHEAR - AXIAL LOAD [lb]	-56 3
max shear - axial load [N]	-250 2
MAX SHEAR - SHEAR LOAD [lb]	109 5
max shear - shear load [N]	487 0
MAX COMBINED - CONFIGURATION ID	NOMINAL
MAX COMBINED - ELEMENT ID	SAME AS MAX AXIAL
MAX COMBINED - LOAD CASE ID	
MAX COMBINED - AXIAL LOAD [lb]	
max combined - axial load [N]	
MAX COMBINED - SHEAR LOAD [lb]	
max combined - shear load [N]	

FACTORS OF SAFETY	
ULTIMATE (for nominal configuration)	2 0
ULTIMATE (for fail safe configuration)	1 0
YIELD (only for nominal configuration)	1.25
JOINT SEPARATION (for nominal configuration)	1 2
JOINT SEPARATION (for fail safe configuration)	1 0
FITTING FACTOR	1 15

BOLT & INSERT DATA	
NOMINAL DIAMETER OF BOLT [in]	0 164
NUMBER OF THREADS/INCH [1/in]	32
TOTAL LENGHT OF BOLT [in]	0 5
LENGHT OF INSERT [in]	0 246
THREADED LENGHT [in]	0 5
MIN EXT DIAMETER OF INSERT [in]	0 205
DEPTH OF RECESS FOR INSERT [in]	0 02
HEIGHT OF NUT [in]	NA

WASHER DATA	
THICKNESS OF WASHER [in]	NA
OUTER DIAMETER OF WASHER [in]	NA
INNER DIAMETER OF WASHER [in]	NA
BOLT HEAD DIAMETER [in]	0 359

FLANGE DATA	
THICK OF FLANGE 1 [in]	0 138
THICK OF FLANGE 2 [in]	0.246
DIAMETER OF HOLE [in]	0 18

BOLT MATERIAL PROPERTY DATA	
TEMP FACTOR FOR ULTIMATE STRENGHT	0.94
TEMP FACTOR FOR YIELD STRENGHT	0.94
ULTIMATE TENSILE ALLOWABLE STRESS [ksi]	80
YIELD TENSILE ALLOWABLE STRESS [ksi]	60
TEMP FACTOR FOR MODULUS	0 94
MODULUS OF ELASTICITY [ksi]	29100
THERMAL COEFF - HOT [1E(-6)/deg]	9 1
THERMAL COEFF - COLD [1E(-6)/deg]	7 8

INSERT MATERIAL PROPERTY DATA	
TEMP FACTOR FOR ULTIMATE STRENGHT	0 94
ULTIMATE TENSILE ALLOWABLE STRESS [ksi]	150

NUT MATERIAL PROPERTY DATA	
TEMP FACTOR FOR ULTIMATE STRENGHT	NA
TENSILE ULTIMATE ALLOWABLE STRESS [psi]	NA
ULTIMATE AXIAL LOAD [lb]	NA

WASHER MATERIAL PROPERTY DATA	
TEMP FACTOR FOR MODULUS	1
MODULUS OF ELASTICITY [ksi]	29100

FLANGE MATERIAL PROPERTY DATA	
TEMP FACTOR FOR MODULUS OF FLANGE 1	0 94
TEMP FACTOR FOR MODULUS OF FLANGE 2	0.94
TEMP FACTOR FOR ULTIMATE STRENGHT OF FLANGE 2	0 94
ULTIMATE SHEAR ALLOWABLE STRESS OF FLANGE 2 [psi]	27000
MODULUS OF ELASTICITY FOR FLANGE 1 [ksi]	10500
MODULUS OF ELASTICITY FOR FLANGE 2 [ksi]	10500
THERMAL COEFF OF FLANGE 1 - HOT [1E(-6)/deg]	12 15
THERMAL COEFF OF FLANGE 1 - COLD [1E(-6)/deg]	11.5
THERMAL COEFF OF FLANGE 2 - HOT [1E(-6)/deg]	12.15
THERMAL COEFF OF FLANGE 2 - COLD [1E(-6)/deg]	11.5
ULTIMATE BEARING ALLOWABLE STRESS FOR FLANGE 1 [psi]	95870
YIELD BEARING ALLOWABLE STRESS FOR FLANGE 1 [psi]	74260
ULTIMATE BEARING ALLOWABLE STRESS FOR FLANGE 2 [psi]	95870
YIELD BEARING ALLOWABLE STRESS FOR FLANGE 2 [psi]	74260

TORQUE AND PRELOAD DATA	
MAX TORQUE [lb in]	11 0
max torque [N m]	1.2
MIN TORQUE [lb in]	10 5
min torque [N m]	1.2
COEFFICIENT OF UTILIZATION [%]	66
LOADING PLANE FACTOR	0 5
PRELOAD UNCETRAINTY	0 35
TORQUE COEFFICIENT	0 2

SUMMARY OF MARGINS FOR BOLTS	
MOS CALCULATION - CONFIGURATION ID	NOMINAL
JOINT SEPARATION	0 06 (MAX AXIAL)
DIRECT TENSION ULTIMATE	3 58 (MAX AXIAL)
DIRECT TENSION YIELD	4 5 (MAX AXIAL)
TOTAL TENSION ULTIMATE	0 92 (MAX AXIAL)
TOTAL TENSION YIELD	0 466 (MAX AXIAL)
DIRECT THREAD SHEAR ULTIMATE	7 47 (MAX AXIAL)
TOTAL THREAD SHEAR ULTIMATE	2 54 (MAX AXIAL)
SHEAR ULTIMATE	1 14 (MAX SHEAR)
BENDING ULTIMATE	> 10
COMBINED SHEAR, TENSION AND BENDING ULTIMATE	0 548 (MAX SHEAR)
NOMINAL CONFIGURATION MINIMUM MOS	0 06
NOMINAL CONFIGURATION MINIMUM ULTIMATE MOS	0 55

NOMINAL CONFIGURATION SUMMARY OF MARGINS FOR BEARING FLANGES	
FLANGE 1 - BEARING ULTIMATE	8 46
FLANGE 1 - BEARING YIELD	>10
FLANGE 2 - BEARING ULTIMATE	>10
FLANGE 2 - BEARING YIELD	>10
NOMINAL CONFIGURATION MINIMUM MOS	>10

FAIL SAFE CONFIGURATION IDENTIFICATION	
FAIL SAFE FAILED BOLT CONFIGURATION	TEST FAIL SAFE
FAIL SAFE 1 FAILED BOLT ID	10091

FAIL SAFE CONFIGURATION BOLT LOADS	
MAX AXIAL - ELEMENT ID	10100
MAX AXIAL - LOAD CASE ID	16
MAX AXIAL - AXIAL LOAD [lb]	101 2
max axial - axial load [N]	449 9
MAX AXIAL - SHEAR LOAD [lb]	94 3
max axial - shear load [N]	419 3
MAX SHEAR - ELEMENT ID	10092
MAX SHEAR - LOAD CASE ID	17
MAX SHEAR - AXIAL LOAD [lb]	-31 6
max shear - axial load [N]	-140 4
MAX SHEAR - SHEAR LOAD [lb]	116 6
max shear - shear load [N]	518 5
MAX COMBINED - LOAD CASE ID	SAME AS MAX SHEAR
MAX COMBINED - AXIAL LOAD [lb]	
max combined - axial load [N]	
MAX COMBINED - SHEAR LOAD [lb]	
max combined - shear load [N]	

FAIL SAFE CONFIGURATION SUMMARY OF MARGINS FOR BOLTS	
MOS CALCULATION - CONFIGURATION ID	TEST FAIL SAFE
JOINT SEPARATION	0 26 (MAX AXIAL)
DIRECT TENSION ULTIMATE	8 05 (MAX AXIAL)
TOTAL TENSION ULTIMATE	0 97 (MAX AXIAL)
DIRECT THREAD SHEAR ULTIMATE	15 72 (MAX AXIAL)
TOTAL THREAD SHEAR ULTIMATE	2 63 (MAX AXIAL)
SHEAR ULTIMATE	3 02 (MAX SHEAR)
BENDING ULTIMATE	> 10
COMBINED SHEAR, TENSION AND BENDING ULTIMATE	0 89 (MAX SHEAR)
FAIL SAFE CONFIGURATION MINIMUM ULTIMATE MOS	0 89

FAIL SAFE CONFIGURATION SUMMARY OF MARGINS FOR BEARING FLANGES	
FLANGE 1 - BEARING ULTIMATE	>10
FLANGE 2 - BEARING ULTIMATE	>10
FAIL SAFE CONFIGURATION MINIMUM MOS	>10

Table 5-3: Joint 3 nominal and fail safe analyses (test)

5.4 JOINT 4 (TEST)

JUNCTION PROPERTIES	
BOLT	NAS1351N3
WASHER 1	NAS620 C10
WASHER 2	NA
NUT	NA
INSERT	MS21209 F1-10
INSERT IN FLANGE	2
NUMBER OF FLANGES	2
LUBRICATED	NO
FLANGE 1 NAME	PDS WALLS
FLANGE 1 MATERIAL	Al7075T7351
FLANGE 1 MATERIAL SPEC	AMS-QQ-A-250/12
FLANGE 1 THICKNESS [in]	0.118
FLANGE 1 HOLE DIAMETER [in]	0.21
FLANGE 2 NAME	PDS WALLS
FLANGE 2 MATERIAL	Al7075T7351
FLANGE 2 MATERIAL SPEC	AMS-QQ-A-250/12
FLANGE 2 THICKNESS [in]	0.18
FLANGE 2 HOLE DIAMETER [in]	0.21

LOADS	
MAX AXIAL - CONFIGURATION ID	NOMINAL
MAX AXIAL - ELEMENT ID	12548
MAX AXIAL - LOAD CASE ID	14
MAX AXIAL - AXIAL LOAD [lb]	44.5
max axial - axial load [N]	197.8
MAX AXIAL - SHEAR LOAD [lb]	17.4
max axial - shear load [N]	77.2
MAX SHEAR - CONFIGURATION ID	NOMINAL
MAX SHEAR - ELEMENT ID	12403
MAX SHEAR - LOAD CASE ID	9
MAX SHEAR - AXIAL LOAD [lb]	8.2
max shear - axial load [N]	36.2
MAX SHEAR - SHEAR LOAD [lb]	103.0
max shear - shear load [N]	457.8
MAX COMBINED - CONFIGURATION ID	NOMINAL
MAX COMBINED - ELEMENT ID	SAME AS MAX AXIAL
MAX COMBINED - LOAD CASE ID	
MAX COMBINED - AXIAL LOAD [lb]	
max combined - axial load [N]	
MAX COMBINED - SHEAR LOAD [lb]	
max combined - shear load [N]	

FACTORS OF SAFETY	
ULTIMATE (for nominal configuration)	2.0
ULTIMATE (for fail safe configuration)	1.0
YIELD (only for nominal configuration)	1.25
JOINT SEPARATION (for nominal configuration)	1.2
JOINT SEPARATION (for fail safe configuration)	1.0
FITTING FACTOR	1.15

BOLT & INSERT DATA	
NOMINAL DIAMETER OF BOLT [in]	0.19
NUMBER OF THREADS/INCH (1/in)	32
TOTAL LENGHT OF BOLT [in]	0.5
LENGHT OF INSERT [in]	0.18
THREADED LENGHT [in]	0.5
MIN EXT DIAMETER OF INSERT [in]	0.236
DEPTH OF RECESS FOR INSERT [in]	0.02
HEIGHT OF NUT [in]	NA

WASHER DATA	
THICKNESS OF WASHER [in]	0.063
OUTER DIAMETER OF WASHER [in]	0.354
INNER DIAMETER OF WASHER [in]	0.195
BOLT HEAD DIAMETER [in]	0.3123

FLANGE DATA	
THICK OF FLANGE 1 [in]	0.118
THICK OF FLANGE 2 [in]	0.18
DIAMETER OF HOLE [in]	0.21

BOLT MATERIAL PROPERTY DATA	
TEMP FACTOR FOR ULTIMATE STRENGHT	0.94
TEMP FACTOR FOR YIELD STRENGHT	0.94
ULTIMATE TENSILE ALLOWABLE STRESS [ksi]	160
YIELD TENSILE ALLOWABLE STRESS [ksi]	110
TEMP FACTOR FOR MODULUS	0.94
MODULUS OF ELASTICITY [ksi]	29100
THERMAL COEFF - HOT [1E(-6)/deg]	9.1
THERMAL COEFF - COLD [1E(-6)/deg]	7.6

INSERT MATERIAL PROPERTY DATA	
TEMP FACTOR FOR ULTIMATE STRENGHT	0.94
ULTIMATE TENSILE ALLOWABLE STRESS [ksi]	150

NUT MATERIAL PROPERTY DATA	
TEMP FACTOR FOR ULTIMATE STRENGHT	NA
TENSILE ULTIMATE ALLOWABLE STRESS [psi]	NA
ULTIMATE AXIAL LOAD [lb]	NA

WASHER MATERIAL PROPERTY DATA	
TEMP FACTOR FOR MODULUS	1
MODULUS OF ELASTICITY [ksi]	29100

FLANGE MATERIAL PROPERTY DATA	
TEMP FACTOR FOR MODULUS OF FLANGE 1	0.94
TEMP FACTOR FOR MODULUS OF FLANGE 2	0.94
TEMP FACTOR FOR ULTIMATE STRENGHT OF FLANGE 2	0.94
ULTIMATE SHEAR ALLOWABLE STRESS OF FLANGE 2 [psi]	27000
MODULUS OF ELASTICITY FOR FLANGE 1 [ksi]	10500
MODULUS OF ELASTICITY FOR FLANGE 2 [ksi]	10500
THERMAL COEFF OF FLANGE 1 - HOT [1E(-6)/deg]	12.15
THERMAL COEFF OF FLANGE 1 - COLD [1E(-6)/deg]	11.5
THERMAL COEFF OF FLANGE 2 - HOT [1E(-6)/deg]	12.15
THERMAL COEFF OF FLANGE 2 - COLD [1E(-6)/deg]	11.5
ULTIMATE BEARING ALLOWABLE STRESS FOR FLANGE 1 [psi]	95870
YIELD BEARING ALLOWABLE STRESS FOR FLANGE 1 [psi]	74260
ULTIMATE BEARING ALLOWABLE STRESS FOR FLANGE 2 [psi]	95870
YIELD BEARING ALLOWABLE STRESS FOR FLANGE 2 [psi]	74260

TORQUE AND PRELOAD DATA	
MAX TORQUE [lb in]	32.0
max torque [N m]	3.6
MIN TORQUE [lb in]	30.0
min torque [N m]	3.4
COEFFICIENT OF UTILIZATION [%]	60
LOADING PLANE FACTOR	0.5
PRELOAD UNCETRAINTY	0.35
TORQUE COEFFICIENT	0.2

SUMMARY OF MARGINS FOR BOLTS	
MOS CALCULATION - CONFIGURATION ID	NOMINAL
JOINT SEPARATION	6.74 (MAX AXIAL)
DIRECT TENSION ULTIMATE	27.29 (MAX AXIAL)
DIRECT TENSION YIELD	30.11 (MAX AXIAL)
TOTAL TENSION ULTIMATE	1.37 (MAX AXIAL)
TOTAL TENSION YIELD	0.636 (MAX AXIAL)
DIRECT THREAD SHEAR ULTIMATE	15.02 (MAX AXIAL)
TOTAL THREAD SHEAR ULTIMATE	0.34 (MAX AXIAL)
SHEAR ULTIMATE	5.68 (MAX SHEAR)
BENDING ULTIMATE	> 10
COMBINED SHEAR, TENSION AND BENDING ULTIMATE	1.342 (MAX AXIAL)
NOMINAL CONFIGURATION MINIMUM MOS	0.34
NOMINAL CONFIGURATION MINIMUM ULTIMATE MOS	0.34

NOMINAL CONFIGURATION SUMMARY OF MARGINS FOR BEARING FLANGES	
FLANGE 1 - BEARING ULTIMATE	9.03
FLANGE 1 - BEARING YIELD	>10
FLANGE 2 - BEARING ULTIMATE	>10
FLANGE 2 - BEARING YIELD	>10
NOMINAL CONFIGURATION MINIMUM MOS	>10

FAIL SAFE CONFIGURATION IDENTIFICATION	
FAIL SAFE FAILED BOLT CONFIGURATION	TEST FAIL SAFE
FAIL SAFE 1 FAILED BOLT ID	12548

FAIL SAFE CONFIGURATION BOLT LOADS	
MAX AXIAL - ELEMENT ID	12547
MAX AXIAL - LOAD CASE ID	10
MAX AXIAL - AXIAL LOAD [lb]	49.9
max axial - axial load [N]	221.9
MAX AXIAL - SHEAR LOAD [lb]	7.9
max axial - shear load [N]	34.8
MAX SHEAR - ELEMENT ID	12403
MAX SHEAR - LOAD CASE ID	9
MAX SHEAR - AXIAL LOAD [lb]	8.2
max shear - axial load [N]	36.4
MAX SHEAR - SHEAR LOAD [lb]	103.9
max shear - shear load [N]	461.9
MAX COMBINED - LOAD CASE ID	SAME AS MAX SHEAR
MAX COMBINED - AXIAL LOAD [lb]	
max combined - axial load [N]	
MAX COMBINED - SHEAR LOAD [lb]	
max combined - shear load [N]	

FAIL SAFE CONFIGURATION SUMMARY OF MARGINS FOR BOLTS	
MOS CALCULATION - CONFIGURATION ID	TEST FAIL SAFE
JOINT SEPARATION	7.28 (MAX AXIAL)
DIRECT TENSION ULTIMATE	49.45 (MAX AXIAL)
TOTAL TENSION ULTIMATE	1.38 (MAX AXIAL)
DIRECT THREAD SHEAR ULTIMATE	27.57 (MAX AXIAL)
TOTAL THREAD SHEAR ULTIMATE	0.35 (MAX AXIAL)
SHEAR ULTIMATE	12.24 (MAX SHEAR)
BENDING ULTIMATE	> 10
COMBINED SHEAR, TENSION AND BENDING ULTIMATE	1.38 (MAX AXIAL)
FAIL SAFE CONFIGURATION MINIMUM ULTIMATE MOS	0.35

FAIL SAFE CONFIGURATION SUMMARY OF MARGINS FOR BEARING FLANGES	
FLANGE 1 - BEARING ULTIMATE	>10
FLANGE 2 - BEARING ULTIMATE	>10
FAIL SAFE CONFIGURATION MINIMUM MOS	>10

Table 5-4: Joint 4 nominal and fail safe analyses (test)

5.5 JOINT 5 (TEST)

N/A in test configuration

5.6 JOINT 6 (TEST)

JUNCTION PROPERTIES	
BOLT	DIN 965 A M2 5
WASHER 1	NA
WASHER 2	NA
NUT	NA
INSERT	TBD
INSERT IN FLANGE	2
NUMBER OF FLANGES	2
LUBRICATED	NO
FLANGE 1 NAME	Covers
FLANGE 1 MATERIAL	Mumetall
FLANGE 1 MATERIAL SPEC	TBD
FLANGE 1 THICKNESS [in]	0 039
FLANGE 1 HOLE DIAMETER [in]	0 102
FLANGE 2 NAME	Boards
FLANGE 2 MATERIAL	AL 7075 T7351
FLANGE 2 MATERIAL SPEC	TBD
FLANGE 2 THICKNESS [in]	0 787
FLANGE 2 HOLE DIAMETER [in]	0 165

FACTORS OF SAFETY	
ULTIMATE (for nominal configuration)	2 0
ULTIMATE (for fail safe configuration)	1 0
YIELD (only for nominal configuration)	1 3
JOINT SEPARATION (for nominal configuration)	1 2
JOINT SEPARATION (for fail safe configuration)	1 0
FITTING FACTOR	1 2

TEMPERATURE DATA	
ASSEMBLY TEMPERATURE [°F]	68
MAX TEMPERATURE [°F]	122
MIN TEMPERATURE [°F]	32

BOLT & INSERT DATA	
NOMINAL DIAMETER OF BOLT [in]	0 099
NUMBER OF THREADS/INCH [1/in]	48
TOTAL LENGHT OF BOLT [in]	0 157
LENGHT OF INSERT [in]	0 189
THREADED LENGHT [in]	0 157
MIN EXT DIAMETER OF INSERT [in]	0 165
DEPTH OF RECESS FOR INSERT [in]	0
HEIGHT OF NUT [in]	NA

WASHER DATA	
THICKNESS OF WASHER [in]	NA
OUTER DIAMETER OF WASHER [in]	NA
INNER DIAMETER OF WASHER [in]	NA
BOLT HEAD DIAMETER [in]	0 185

FLANGE DATA	
THICK OF FLANGE 1 [in]	0 039
THICK OF FLANGE 2 [in]	0 787
DIAMETER OF HOLE [in]	0 102

BOLT MATERIAL PROPERTY DATA	
TEMP FACTOR FOR ULTIMATE STRENGHT	0.94
TEMP FACTOR FOR YIELD STRENGHT	0.94
ULTIMATE TENSILE ALLOWABLE STRESS [ksi]	58.02
YIELD TENSILE ALLOWABLE STRESS [ksi]	46 41
TEMP FACTOR FOR MODULUS	0.94
MODULUS OF ELASTICITY [ksi]	30457 92
THERMAL COEFF - HOT [1E(-6)/degF]	9.10
THERMAL COEFF - COLD [1E(-6)/degF]	7.80

INSERT MATERIAL PROPERTY DATA	
TEMP FACTOR FOR ULTIMATE STRENGHT	0 940
ULTIMATE TENSILE ALLOWABLE STRESS [ksi]	67 999

NUT MATERIAL PROPERTY DATA	
TEMP FACTOR FOR ULTIMATE STRENGHT	NA
TENSILE ULTIMATE ALLOWABLE STRESS [psi]	NA
ULTIMATE AXIAL LOAD [lb]	NA

WASHER MATERIAL PROPERTY DATA	
TEMP FACTOR FOR MODULUS	NA
MODULUS OF ELASTICITY [ksi]	NA

FLANGE MATERIAL PROPERTY DATA	
TEMP FACTOR FOR MODULUS OF FLANGE 1	1
TEMP FACTOR FOR MODULUS OF FLANGE 2	1
TEMP FACTOR FOR ULTIMATE STRENGHT OF FLANGE 2	0.94
ULTIMATE SHEAR ALLOWABLE STRESS OF FLANGE 2 [psi]	40799.70
MODULUS OF ELASTICITY FOR FLANGE 1 [ksi]	24656.42
MODULUS OF ELASTICITY FOR FLANGE 2 [ksi]	10300
THERMAL COEFF OF FLANGE 1 - HOT [1E(-6)/degF]	7.50
THERMAL COEFF OF FLANGE 1 - COLD [1E(-6)/degF]	7.50
THERMAL COEFF OF FLANGE 2 - HOT [1E(-6)/degF]	12.15
THERMAL COEFF OF FLANGE 2 - COLD [1E(-6)/degF]	11.50
ULTIMATE BEARING ALLOWABLE STRESS FOR FLANGE 1 [psi]	13634
YIELD BEARING ALLOWABLE STRESS FOR FLANGE 1 [psi]	13634
ULTIMATE BEARING ALLOWABLE STRESS FOR FLANGE 2 [psi]	95870
YIELD BEARING ALLOWABLE STRESS FOR FLANGE 2 [psi]	74260

TORQUE AND PRELOAD DATA	
MAX TORQUE [lb in]	2.600
max torque [N m]	0 294
MIN TORQUE [lb in]	2 400
min torque [N m]	0 271
COEFFICIENT OF UTILIZATION [%]	93.470
LOADING PLANE FACTOR	0 5
PRELOAD UNCETRAINTY	0 35
TORQUE COEFFICIENT	0 20

LOADS	
MAX AXIAL - CONFIGURATION ID	NOMINAL
MAX AXIAL - ELEMENT ID	13382884
MAX AXIAL - LOAD CASE ID	4
MAX AXIAL - AXIAL LOAD [lb]	4.5
max axial - axial load [N]	19 8
MAX AXIAL - SHEAR LOAD [lb]	8.9
max axial - shear load [N]	39.3
MAX SHEAR - CONFIGURATION ID	NOMINAL
MAX SHEAR - ELEMENT ID	13382036
MAX SHEAR - LOAD CASE ID	3.0
MAX SHEAR - AXIAL LOAD [lb]	3.6
max shear - axial load [N]	15.8
MAX SHEAR - SHEAR LOAD [lb]	15.0
max shear - shear load [N]	66 3
MAX COMBINED - CONFIGURATION ID	NOMINAL
MAX COMBINED - ELEMENT ID	13382884
MAX COMBINED - LOAD CASE ID	3.000
MAX COMBINED - AXIAL LOAD [lb]	4.500
max combined - axial load [N]	19 740
MAX COMBINED - SHEAR LOAD [lb]	9 100
max combined - shear load [N]	40 260

SUMMARY OF MARGINS FOR BOLTS	
MOS CALCULATION - CONFIGURATION ID	NOMINAL
JOINT SEPARATION	9 14 (MAX AXIAL)
DIRECT TENSION ULTIMATE	24.63 (MAX AXIAL)
DIRECT TENSION YIELD	31.81 (MAX AXIAL)
TOTAL TENSION ULTIMATE	0.36 (MAX AXIAL)
TOTAL TENSION YIELD	0.091 (MAX AXIAL)
DIRECT THREAD SHEAR ULTIMATE	49.15 (MAX AXIAL)
TOTAL THREAD SHEAR ULTIMATE	1.66 (MAX AXIAL)
SHEAR ULTIMATE	2 85 (MAX SHEAR)
BENDING ULTIMATE	> 10
COMBINED SHEAR, TENSION AND BENDING ULTIMATE	0 333 (MAX SHEAR)
NOMINAL CONFIGURATION MINIMUM MOS	0 091
NOMINAL CONFIGURATION MINIMUM ULTIMATE MOS	0 333

NOMINAL CONFIGURATION SUMMARY OF MARGINS FOR BEARING FLANGES	
FLANGE 1 - BEARING ULTIMATE	0 593
FLANGE 1 - BEARING YIELD	1.548
FLANGE 2 - BEARING ULTIMATE	>10
FLANGE 2 - BEARING YIELD	>10
NOMINAL CONFIGURATION MINIMUM MOS	0 59 (ULT-FL 2)

FAIL SAFE CONFIGURATION IDENTIFICATION	
FAIL SAFE FAILED BOLT CONFIGURATION	TEST FAIL SAFE
FAIL SAFE 1 FAILED BOLT ID	13382036

FAIL SAFE CONFIGURATION BOLT LOADS	
MAX AXIAL - ELEMENT ID	13382037
MAX AXIAL - LOAD CASE ID	1
MAX AXIAL - AXIAL LOAD [lb]	5.2
max axial - axial load [N]	22.7
MAX AXIAL - SHEAR LOAD [lb]	11 9
max axial - shear load [N]	52 7
MAX SHEAR - ELEMENT ID	13382033
MAX SHEAR - LOAD CASE ID	3
MAX SHEAR - AXIAL LOAD [lb]	3.8
max shear - axial load [N]	16 5
MAX SHEAR - SHEAR LOAD [lb]	32 9
max shear - shear load [N]	146 2
MAX COMBINED - LOAD CASE ID	Same as max shear
MAX COMBINED - AXIAL LOAD [lb]	
max combined - axial load [N]	
MAX COMBINED - SHEAR LOAD [lb]	
max combined - shear load [N]	
MAX COMBINED - ELEMENT ID	

FAIL SAFE CONFIGURATION SUMMARY OF MARGINS FOR BOLTS	
MOS CALCULATION - CONFIGURATION ID	TEST FAIL SAFE
JOINT SEPARATION	9 53 (MAX AXIAL)
DIRECT TENSION ULTIMATE	43 36 (MAX AXIAL)
TOTAL TENSION ULTIMATE	0.36 (MAX AXIAL)
DIRECT THREAD SHEAR ULTIMATE	85 79 (MAX AXIAL)
TOTAL THREAD SHEAR ULTIMATE	1 67 (MAX AXIAL)
SHEAR ULTIMATE	2 51 (MAX SHEAR)
BENDING ULTIMATE	> 10
COMBINED SHEAR, TENSION AND BENDING ULTIMATE	0 33 (MAX SHEAR)
FAIL SAFE CONFIGURATION MINIMUM ULTIMATE MOS	0.330

FAIL SAFE CONFIGURATION SUMMARY OF MARGINS FOR BEARING FLANGES	
FLANGE 1 - BEARING ULTIMATE	9 21
FLANGE 2 - BEARING ULTIMATE	>10
FAIL SAFE CONFIGURATION MINIMUM MOS	9.21

Table 5-5: Joint 6 nominal and fail safe analyses (test)

6. JOINTS MOS IN FLIGHT CONFIGURATION

6.1 JOINT 1 (FLIGHT)

JUNCTION PROPERTIES	
BOLT	NAS1351N3
WASHER 1	NA
WASHER 2	NA
NUT	MS21060L3
INSERT	NA
INSERT IN FLANGE	2
NUMBER OF FLANGES	2
LUBRICATED	YES
FLANGE 1 NAME	INSERT TYPE B
FLANGE 1 MATERIAL	AL7075 T7351
FLANGE 1 MATERIAL SPEC	AMS-QQ-A-225/9
FLANGE 1 THICKNESS [in]	NA
FLANGE 1 HOLE DIAMETER [in]	0 21
FLANGE 2 NAME	BASEPLATE
FLANGE 2 MATERIAL	AL7075 T7351
FLANGE 2 MATERIAL SPEC	AMS-QQ-A-250/12
FLANGE 2 THICKNESS [in]	0.118
FLANGE 2 HOLE DIAMETER [in]	0 21

LOADS	
MAX AXIAL - CONFIGURATION ID	NOMINAL
MAX AXIAL - ELEMENT ID	10041
MAX AXIAL - LOAD CASE ID	32
MAX AXIAL - AXIAL LOAD [lb]	18 1
max axial - axial load [N]	80.2
MAX AXIAL - SHEAR LOAD [lb]	106.4
max axial - shear load [N]	473 0
MAX SHEAR - CONFIGURATION ID	NOMINAL
MAX SHEAR - ELEMENT ID	10001
MAX SHEAR - LOAD CASE ID	80
MAX SHEAR - AXIAL LOAD [lb]	-4 8
max shear - axial load [N]	-21.1
MAX SHEAR - SHEAR LOAD [lb]	132.2
max shear - shear load [N]	587.7
MAX COMBINED - CONFIGURATION ID	NOMINAL
MAX COMBINED - ELEMENT ID	SAME AS MAX SHEAR
MAX COMBINED - LOAD CASE ID	
MAX COMBINED - AXIAL LOAD [lb]	
max combined - axial load [N]	
MAX COMBINED - SHEAR LOAD [lb]	
max combined - shear load [N]	

FACTORS OF SAFETY	
ULTIMATE (for nominal configuration)	2 0
ULTIMATE (for fail safe configuration)	1 0
YIELD (only for nominal configuration)	1.25
JOINT SEPARATION (for nominal configuration)	1.2
JOINT SEPARATION (for fail safe configuration)	1.0
FITTING FACTOR	1 15

BOLT & INSERT DATA	
NOMINAL DIAMETER OF BOLT [in]	0 19
NUMBER OF THREADS/INCH [1/in]	32
TOTAL LENGHT OF BOLT [in]	0.5
LENGHT OF INSERT [in]	NA
THREADED LENGHT [in]	0.5
MIN EXT DIAMETER OF INSERT [in]	NA
DEPTH OF RECESS FOR INSERT [in]	NA
HEIGHT OF NUT [in]	0 25

WASHER DATA	
THICKNESS OF WASHER [in]	NA
OUTER DIAMETER OF WASHER [in]	NA
INNER DIAMETER OF WASHER [in]	NA
BOLT HEAD DIAMETER [in]	NA

FLANGE DATA	
THICK OF FLANGE 1 [in]	NA
THICK OF FLANGE 2 [in]	0.118
DIAMETER OF HOLE [in]	0.21

BOLT MATERIAL PROPERTY DATA	
TEMP FACTOR FOR ULTIMATE STRENGHT	0 94
TEMP FACTOR FOR YIELD STRENGHT	0.94
ULTIMATE TENSILE ALLOWABLE STRESS [ksi]	160
YIELD TENSILE ALLOWABLE STRESS [ksi]	110
TEMP FACTOR FOR MODULUS	0 94
MODULUS OF ELASTICITY [ksi]	29100
THERMAL COEFF - HOT [1E(-6)/deg]	9 1
THERMAL COEFF - COLD [1E(-6)/deg]	7 8

INSERT MATERIAL PROPERTY DATA	
TEMP FACTOR FOR ULTIMATE STRENGHT	0.94
ULTIMATE TENSILE ALLOWABLE STRESS [ksi]	NA

NUT MATERIAL PROPERTY DATA	
TEMP FACTOR FOR ULTIMATE STRENGHT	0 94
TENSILE ULTIMATE ALLOWABLE STRESS [psi]	125000
ULTIMATE AXIAL LOAD [lb]	6470

WASHER MATERIAL PROPERTY DATA	
TEMP FACTOR FOR MODULUS	1
MODULUS OF ELASTICITY [ksi]	29100

FLANGE MATERIAL PROPERTY DATA	
TEMP FACTOR FOR MODULUS OF FLANGE 1	0 94
TEMP FACTOR FOR MODULUS OF FLANGE 2	0 94
TEMP FACTOR FOR ULTIMATE STRENGHT OF FLANGE 2	0 94
ULTIMATE SHEAR ALLOWABLE STRESS OF FLANGE 2 [psi]	NA
MODULUS OF ELASTICITY FOR FLANGE 1 [ksi]	10500
MODULUS OF ELASTICITY FOR FLANGE 2 [ksi]	10500
THERMAL COEFF OF FLANGE 1 - HOT [1E(-6)/deg]	12 15
THERMAL COEFF OF FLANGE 1 - COLD [1E(-6)/deg]	11 15
THERMAL COEFF OF FLANGE 2 - HOT [1E(-6)/deg]	12.15
THERMAL COEFF OF FLANGE 2 - COLD [1E(-6)/deg]	11 15
ULTIMATE BEARING ALLOWABLE STRESS FOR FLANGE 1 [psi]	NA
YIELD BEARING ALLOWABLE STRESS FOR FLANGE 1 [psi]	NA
ULTIMATE BEARING ALLOWABLE STRESS FOR FLANGE 2 [psi]	95870
YIELD BEARING ALLOWABLE STRESS FOR FLANGE 2 [psi]	74260

TORQUE AND PRELOAD DATA	
MAX TORQUE [lb in]	26 0
max torque [N m]	3 2
MIN TORQUE [lb in]	26 0
min torque [N m]	2 9
COEFFICIENT OF UTILIZATION [%]	64
LOADING PLANE FACTOR	0 5
PRELOAD UNCETRAINTY	0.25
TORQUE COEFFICIENT	0 15

SUMMARY OF MARGINS FOR BOLTS	
MOS CALCULATION - CONFIGURATION ID	NOMINAL
JOINT SEPARATION	29 27 (MAX AXIAL)
DIRECT TENSION ULTIMATE	68 54 (MAX AXIAL)
DIRECT TENSION YIELD	75 5 (MAX AXIAL)
TOTAL TENSION ULTIMATE	1 25 (MAX AXIAL)
TOTAL TENSION YIELD	0 55 (MAX AXIAL)
DIRECT THREAD SHEAR ULTIMATE	82 45 (MAX AXIAL)
TOTAL THREAD SHEAR ULTIMATE	1,7 (MAX AXIAL)
SHEAR ULTIMATE	4.2 (MAX SHEAR)
BENDING ULTIMATE	> 10
COMBINED SHEAR, TENSION AND BENDING ULTIMATE	1 18 (MAX SHEAR)
NOMINAL CONFIGURATION MINIMUM MOS	0 55
NOMINAL CONFIGURATION MINIMUM ULTIMATE MOS	1 18

NOMINAL CONFIGURATION SUMMARY OF MARGINS FOR BEARING FLANGES	
FLANGE 1 - BEARING ULTIMATE	NA
FLANGE 1 - BEARING YIELD	
FLANGE 2 - BEARING ULTIMATE	6 81
FLANGE 2 - BEARING YIELD	8 68
NOMINAL CONFIGURATION MINIMUM MOS	6.81 (ULT-FL 2)

FAIL SAFE CONFIGURATION IDENTIFICATION	
FAIL SAFE FAILED BOLT CONFIGURATION	FLIGHT FAIL SAFE
FAIL SAFE 1 FAILED BOLT ID	10001

FAIL SAFE CONFIGURATION BOLT LOADS	
MAX AXIAL - ELEMENT ID	10041
MAX AXIAL - LOAD CASE ID	32
MAX AXIAL - AXIAL LOAD [lb]	18 1
max axial - axial load [N]	80.2
MAX AXIAL - SHEAR LOAD [lb]	110.7
max axial - shear load [N]	492 2
MAX SHEAR - ELEMENT ID	10041
MAX SHEAR - LOAD CASE ID	96
MAX SHEAR - AXIAL LOAD [lb]	16 9
max shear - axial load [N]	75 0
MAX SHEAR - SHEAR LOAD [lb]	132 9
max shear - shear load [N]	590 8
MAX COMBINED - LOAD CASE ID	SAME AS MAX SHEAR
MAX COMBINED - AXIAL LOAD [lb]	
max combined - axial load [N]	
MAX COMBINED - SHEAR LOAD [lb]	
max combined - shear load [N]	

FAIL SAFE CONFIGURATION SUMMARY OF MARGINS FOR BOLTS	
MOS CALCULATION - CONFIGURATION ID	FLIGHT FAIL SAFE
JOINT SEPARATION	35 32 (MAX AXIAL)
DIRECT TENSION ULTIMATE	138.08 (MAX AXIAL)
TOTAL TENSION ULTIMATE	1.26 (MAX AXIAL)
DIRECT THREAD SHEAR ULTIMATE	165 9 (MAX AXIAL)
TOTAL THREAD SHEAR ULTIMATE	1.71 (MAX AXIAL)
SHEAR ULTIMATE	9 35 (MAX SHEAR)
BENDING ULTIMATE	> 10
COMBINED SHEAR, TENSION AND BENDING ULTIMATE	1.25 (MAX AXIAL)
FAIL SAFE CONFIGURATION MINIMUM ULTIMATE MOS	1.25

FAIL SAFE CONFIGURATION SUMMARY OF MARGINS FOR BEARING FLANGES	
FLANGE 1 - BEARING ULTIMATE	NA
FLANGE 2 - BEARING ULTIMATE	>10
FAIL SAFE CONFIGURATION MINIMUM MOS	>10

Table 6-1: Joint 1 nominal and fail safe analyses (flight)

6.2 JOINT 2 (FLIGHT)

JUNCTION PROPERTIES	
BOLT	NAS1352N08
WASHER 1	NAS620 C08
WASHER 2	NA
NUT	NA
INSERT	MS21209 C08-10
INSERT IN FLANGE	2
NUMBER OF FLANGES	2
LUBRICATED	NO
FLANGE 1 NAME	PDS WALLS
FLANGE 1 MATERIAL	Al7075T7351
FLANGE 1 MATERIAL SPEC	AMS-QQ-A-250/12
FLANGE 1 THICKNESS [in]	0.138
FLANGE 1 HOLE DIAMETER [in]	0.18
FLANGE 2 NAME	PDS WALLS
FLANGE 2 MATERIAL	Al7075T7351
FLANGE 2 MATERIAL SPEC	AMS-QQ-A-250/12
FLANGE 2 THICKNESS [in]	0.246
FLANGE 2 HOLE DIAMETER [in]	0.18

LOADS	
MAX AXIAL - CONFIGURATION ID	NOMINAL
MAX AXIAL - ELEMENT ID	10819
MAX AXIAL - LOAD CASE ID	32
MAX AXIAL - AXIAL LOAD [lb]	14.2
max axial - axial load [N]	63.0
MAX AXIAL - SHEAR LOAD [lb]	61.9
max axial - shear load [N]	275.2
MAX SHEAR - CONFIGURATION ID	NOMINAL
MAX SHEAR - ELEMENT ID	10840
MAX SHEAR - LOAD CASE ID	80
MAX SHEAR - AXIAL LOAD [lb]	-5.4
max shear - axial load [N]	-23.8
MAX SHEAR - SHEAR LOAD [lb]	162.4
max shear - shear load [N]	722.3
MAX COMBINED - CONFIGURATION ID	NOMINAL
MAX COMBINED - ELEMENT ID	SAME AS MAX SHEAR
MAX COMBINED - LOAD CASE ID	
MAX COMBINED - AXIAL LOAD [lb]	
max combined - axial load [N]	
MAX COMBINED - SHEAR LOAD [lb]	
max combined - shear load [N]	

FACTORS OF SAFETY	
ULTIMATE (for nominal configuration)	2.0
ULTIMATE (for fail safe configuration)	1.0
YIELD (only for nominal configuration)	1.25
JOINT SEPARATION (for nominal configuration)	1.2
JOINT SEPARATION (for fail safe configuration)	1.0
FITTING FACTOR	1.15

BOLT & INSERT DATA	
NOMINAL DIAMETER OF BOLT [in]	0.164
NUMBER OF THREADS/INCH [1/in]	32
TOTAL LENGHT OF BOLT [in]	0.5
LENGHT OF INSERT [in]	0.246
THREADED LENGHT [in]	0.5
MIN EXT DIAMETER OF INSERT [in]	0.205
DEPTH OF RECESS FOR INSERT [in]	0.02
HEIGHT OF NUT [in]	NA

WASHER DATA	
THICKNESS OF WASHER [in]	0.032
OUTER DIAMETER OF WASHER [in]	0.304
INNER DIAMETER OF WASHER [in]	0.169
BOLT HEAD DIAMETER [in]	0.27

FLANGE DATA	
THICK OF FLANGE 1 [in]	0.138
THICK OF FLANGE 2 [in]	0.246
DIAMETER OF HOLE [in]	0.18

BOLT MATERIAL PROPERTY DATA	
TEMP FACTOR FOR ULTIMATE STRENGHT	0.94
TEMP FACTOR FOR YIELD STRENGHT	0.94
ULTIMATE TENSILE ALLOWABLE STRESS [ksi]	160
YIELD TENSILE ALLOWABLE STRESS [ksi]	110
TEMP FACTOR FOR MODULUS	0.94
MODULUS OF ELASTICITY [ksi]	29100
THERMAL COEFF - HOT [1E(-6)/deg]	9.1
THERMAL COEFF - COLD [1E(-6)/deg]	7.8

INSERT MATERIAL PROPERTY DATA	
TEMP FACTOR FOR ULTIMATE STRENGHT	0.94
ULTIMATE TENSILE ALLOWABLE STRESS [ksi]	150

NUT MATERIAL PROPERTY DATA	
TEMP FACTOR FOR ULTIMATE STRENGHT	NA
TENSILE ULTIMATE ALLOWABLE STRESS [psi]	NA
ULTIMATE AXIAL LOAD [lb]	NA

WASHER MATERIAL PROPERTY DATA	
TEMP FACTOR FOR MODULUS	1
MODULUS OF ELASTICITY [ksi]	29100

FLANGE MATERIAL PROPERTY DATA	
TEMP FACTOR FOR MODULUS OF FLANGE 1	0.94
TEMP FACTOR FOR MODULUS OF FLANGE 2	0.94
TEMP FACTOR FOR ULTIMATE STRENGHT OF FLANGE 2	0.94
ULTIMATE SHEAR ALLOWABLE STRESS OF FLANGE 2 [psi]	27000
MODULUS OF ELASTICITY FOR FLANGE 1 [ksi]	10500
MODULUS OF ELASTICITY FOR FLANGE 2 [ksi]	10500
THERMAL COEFF OF FLANGE 1 - HOT [1E(-6)/deg]	12.15
THERMAL COEFF OF FLANGE 1 - COLD [1E(-6)/deg]	11.5
THERMAL COEFF OF FLANGE 2 - HOT [1E(-6)/deg]	12.15
THERMAL COEFF OF FLANGE 2 - COLD [1E(-6)/deg]	11.5
ULTIMATE BEARING ALLOWABLE STRESS FOR FLANGE 1 [psi]	95870
YIELD BEARING ALLOWABLE STRESS FOR FLANGE 1 [psi]	74260
ULTIMATE BEARING ALLOWABLE STRESS FOR FLANGE 2 [psi]	95870
YIELD BEARING ALLOWABLE STRESS FOR FLANGE 2 [psi]	74260

TORQUE AND PRELOAD DATA	
MAX TORQUE [lb in]	20.0
max torque [N m]	2.3
MIN TORQUE [lb in]	18.0
min torque [N m]	2.0
COEFFICIENT OF UTILIZATION [%]	63
LOADING PLANE FACTOR	0.5
PRELOAD UNCETRAINTY	0.35
TORQUE COEFFICIENT	0.2

SUMMARY OF MARGINS FOR BOLTS	
MOS CALCULATION - CONFIGURATION ID	NOMINAL
JOINT SEPARATION	15.1 (MAX AXIAL)
DIRECT TENSION ULTIMATE	60.64 (MAX AXIAL)
DIRECT TENSION YIELD	66.81 (MAX AXIAL)
TOTAL TENSION ULTIMATE	1.28 (MAX AXIAL)
TOTAL TENSION YIELD	0.57 (MAX AXIAL)
DIRECT THREAD SHEAR ULTIMATE	58.59 (MAX AXIAL)
TOTAL THREAD SHEAR ULTIMATE	1.2 (MAX AXIAL)
SHEAR ULTIMATE	1.89 (MAX SHEAR)
BENDING ULTIMATE	> 10
COMBINED SHEAR, TENSION AND BENDING ULTIMATE	0.921 (MAX SHEAR)
NOMINAL CONFIGURATION MINIMUM MOS	0.57
NOMINAL CONFIGURATION MINIMUM ULTIMATE MOS	0.92

NOMINAL CONFIGURATION SUMMARY OF MARGINS FOR BEARING FLANGES	
FLANGE 1 - BEARING ULTIMATE	5.38
FLANGE 1 - BEARING YIELD	6.90
FLANGE 2 - BEARING ULTIMATE	>10
FLANGE 2 - BEARING YIELD	>10
NOMINAL CONFIGURATION MINIMUM MOS	5.38 (ULT-FL 1)

FAIL SAFE CONFIGURATION IDENTIFICATION	
FAIL SAFE FAILED BOLT CONFIGURATION	FLIGHT FAIL SAFE
FAIL SAFE 1 FAILED BOLT ID	10840

FAIL SAFE CONFIGURATION BOLT LOADS	
MAX AXIAL - ELEMENT ID	10819
MAX AXIAL - LOAD CASE ID	32
MAX AXIAL - AXIAL LOAD [lb]	14.2
max axial - axial load [N]	62.9
MAX AXIAL - SHEAR LOAD [lb]	63.6
max axial - shear load [N]	282.8
MAX SHEAR - ELEMENT ID	10841
MAX SHEAR - LOAD CASE ID	79
MAX SHEAR - AXIAL LOAD [lb]	3.6
max shear - axial load [N]	15.9
MAX SHEAR - SHEAR LOAD [lb]	125.2
max shear - shear load [N]	556.5
MAX COMBINED - LOAD CASE ID	SAME AS MAX SHEAR
MAX COMBINED - AXIAL LOAD [lb]	
max combined - axial load [N]	
MAX COMBINED - SHEAR LOAD [lb]	
max combined - shear load [N]	

FAIL SAFE CONFIGURATION SUMMARY OF MARGINS FOR BOLTS	
MOS CALCULATION - CONFIGURATION ID	FLIGHT FAIL SAFE
JOINT SEPARATION	18.33 (MAX AXIAL)
DIRECT TENSION ULTIMATE	122.29 (MAX AXIAL)
TOTAL TENSION ULTIMATE	1.28 (MAX AXIAL)
DIRECT THREAD SHEAR ULTIMATE	118.19 (MAX AXIAL)
TOTAL THREAD SHEAR ULTIMATE	1.21 (MAX AXIAL)
SHEAR ULTIMATE	6.5 (MAX SHEAR)
BENDING ULTIMATE	> 10
COMBINED SHEAR, TENSION AND BENDING ULTIMATE	1.26 (MAX SHEAR)
FAIL SAFE CONFIGURATION MINIMUM ULTIMATE MOS	1.21

FAIL SAFE CONFIGURATION SUMMARY OF MARGINS FOR BEARING FLANGES	
FLANGE 1 - BEARING ULTIMATE	>10
FLANGE 2 - BEARING ULTIMATE	>10
FAIL SAFE CONFIGURATION MINIMUM MOS	>10

Table 6-2: Joint 2 nominal and fail safe analyses (flight)

6.3 JOINT 3 (FLIGHT)

JUNCTION PROPERTIES	
BOLT	MS24671
WASHER 1	NA
WASHER 2	NA
NUT	NA
INSERT	MS21209 C08-10
INSERT IN FLANGE	2
NUMBER OF FLANGES	2
LUBRICATED	NO
FLANGE 1 NAME	PDS WALLS
FLANGE 1 MATERIAL	Al7075T7351
FLANGE 1 MATERIAL SPEC	AMS-QQ-A-250/12
FLANGE 1 THICKNESS [in]	0 136
FLANGE 1 HOLE DIAMETER [in]	0.18
FLANGE 2 NAME	PDS WALLS
FLANGE 2 MATERIAL	Al7075T7351
FLANGE 2 MATERIAL SPEC	AMS-QQ-A-250/12
FLANGE 2 THICKNESS [in]	0 246
FLANGE 2 HOLE DIAMETER [in]	0 18

LOADS	
MAX AXIAL - CONFIGURATION ID	NOMINAL
MAX AXIAL - ELEMENT ID	10055
MAX AXIAL - LOAD CASE ID	32
MAX AXIAL - AXIAL LOAD [lb]	9 3
max axial - axial load [N]	41 3
MAX AXIAL - SHEAR LOAD [lb]	68.7
max axial - shear load [N]	305.2
MAX SHEAR - CONFIGURATION ID	NOMINAL
MAX SHEAR - ELEMENT ID	10059
MAX SHEAR - LOAD CASE ID	95
MAX SHEAR - AXIAL LOAD [lb]	6 4
max shear - axial load [N]	28.2
MAX SHEAR - SHEAR LOAD [lb]	86 7
max shear - shear load [N]	385.4
MAX COMBINED - CONFIGURATION ID	NOMINAL
MAX COMBINED - ELEMENT ID	SAME AS MAX SHEAR
MAX COMBINED - LOAD CASE ID	
MAX COMBINED - AXIAL LOAD [lb]	
max combined - axial load [N]	
MAX COMBINED - SHEAR LOAD [lb]	
max combined - shear load [N]	

FACTORS OF SAFETY	
ULTIMATE (for nominal configuration)	2 0
ULTIMATE (for fail safe configuration)	1 0
YIELD (only for nominal configuration)	1 25
JOINT SEPARATION (for nominal configuration)	1 2
JOINT SEPARATION (for fail safe configuration)	1 0
FITTING FACTOR	1 15

BOLT & INSERT DATA	
NOMINAL DIAMETER OF BOLT [in]	0.164
NUMBER OF THREADS/INCH [1/in]	32
TOTAL LENGHT OF BOLT [in]	0 5
LENGHT OF INSERT [in]	0.246
THREADED LENGHT [in]	0 5
MIN EXT DIAMETER OF INSERT [in]	0.205
DEPTH OF RECESS FOR INSERT [in]	0 02
HEIGHT OF NUT [in]	NA

WASHER DATA	
THICKNESS OF WASHER [in]	NA
OUTER DIAMETER OF WASHER [in]	NA
INNER DIAMETER OF WASHER [in]	NA
BOLT HEAD DIAMETER [in]	0 359

FLANGE DATA	
THICK OF FLANGE 1 [in]	0.136
THICK OF FLANGE 2 [in]	0.246
DIAMETER OF HOLE [in]	0 18

BOLT MATERIAL PROPERTY DATA	
TEMP FACTOR FOR ULTIMATE STRENGHT	0 94
TEMP FACTOR FOR YIELD STRENGHT	0 94
ULTIMATE TENSILE ALLOWABLE STRESS [ksi]	80
YIELD TENSILE ALLOWABLE STRESS [ksi]	60
TEMP FACTOR FOR MODULUS	0 94
MODULUS OF ELASTICITY [ksi]	28100
THERMAL COEFF - HOT [1E(-6)/deg]	9.1
THERMAL COEFF - COLD [1E(-6)/deg]	7.8

INSERT MATERIAL PROPERTY DATA	
TEMP FACTOR FOR ULTIMATE STRENGHT	0 94
ULTIMATE TENSILE ALLOWABLE STRESS [ksi]	150

NUT MATERIAL PROPERTY DATA	
TEMP FACTOR FOR ULTIMATE STRENGHT	NA
TENSILE ULTIMATE ALLOWABLE STRESS [psi]	NA
ULTIMATE AXIAL LOAD [lb]	NA

WASHER MATERIAL PROPERTY DATA	
TEMP FACTOR FOR MODULUS	1
MODULUS OF ELASTICITY [ksi]	28100

FLANGE MATERIAL PROPERTY DATA	
TEMP FACTOR FOR MODULUS OF FLANGE 1	0 94
TEMP FACTOR FOR MODULUS OF FLANGE 2	0 94
TEMP FACTOR FOR ULTIMATE STRENGHT OF FLANGE 2	0.94
ULTIMATE SHEAR ALLOWABLE STRESS OF FLANGE 2 [psi]	27000
MODULUS OF ELASTICITY FOR FLANGE 1 [ksi]	10500
MODULUS OF ELASTICITY FOR FLANGE 2 [ksi]	10500
THERMAL COEFF OF FLANGE 1 - HOT [1E(-6)/deg]	12 15
THERMAL COEFF OF FLANGE 1 - COLD [1E(-6)/deg]	11 5
THERMAL COEFF OF FLANGE 2 - HOT [1E(-6)/deg]	12 15
THERMAL COEFF OF FLANGE 2 - COLD [1E(-6)/deg]	11 5
ULTIMATE BEARING ALLOWABLE STRESS FOR FLANGE 1 [psi]	95870
YIELD BEARING ALLOWABLE STRESS FOR FLANGE 1 [psi]	74260
ULTIMATE BEARING ALLOWABLE STRESS FOR FLANGE 2 [psi]	95870
YIELD BEARING ALLOWABLE STRESS FOR FLANGE 2 [psi]	74260

TORQUE AND PRELOAD DATA	
MAX TORQUE [lb in]	11 0
max torque [N m]	1.2
MIN TORQUE [lb in]	10 5
min torque [N m]	1.2
COEFFICIENT OF UTILIZATION [%]	66
LOADING PLANE FACTOR	0.5
PRELOAD UNCETRAINTY	0 35
TORQUE COEFFICIENT	0 2

SUMMARY OF MARGINS FOR BOLTS	
MOS CALCULATION - CONFIGURATION ID	NOMINAL
JOINT SEPARATION	10 39 (MAX AXIAL)
DIRECT TENSION ULTIMATE	48 25 (MAX AXIAL)
DIRECT TENSION YIELD	58 1 (MAX AXIAL)
TOTAL TENSION ULTIMATE	1.01 (MAX AXIAL)
TOTAL TENSION YIELD	0 508 (MAX AXIAL)
DIRECT THREAD SHEAR ULTIMATE	89.99 (MAX AXIAL)
TOTAL THREAD SHEAR ULTIMATE	2.71 (MAX AXIAL)
SHEAR ULTIMATE	1 71 (MAX SHEAR)
BENDING ULTIMATE	> 10
COMBINED SHEAR, TENSION AND BENDING ULTIMATE	0 729 (MAX SHEAR)
NOMINAL CONFIGURATION MINIMUM MOS	0.51
NOMINAL CONFIGURATION MINIMUM ULTIMATE MOS	0.73

NOMINAL CONFIGURATION SUMMARY OF MARGINS FOR BEARING FLANGES	
FLANGE 1 - BEARING ULTIMATE	>10
FLANGE 1 - BEARING YIELD	>10
FLANGE 2 - BEARING ULTIMATE	>10
FLANGE 2 - BEARING YIELD	>10
NOMINAL CONFIGURATION MINIMUM MOS	>10

FAIL SAFE CONFIGURATION IDENTIFICATION	
FAIL SAFE FAILED BOLT CONFIGURATION	FLIGHT FAIL SAFE
FAIL SAFE 1 FAILED BOLT ID	10059

FAIL SAFE CONFIGURATION BOLT LOADS	
MAX AXIAL - ELEMENT ID	10055
MAX AXIAL - LOAD CASE ID	32
MAX AXIAL - AXIAL LOAD [lb]	9 4
max axial - axial load [N]	41.4
MAX AXIAL - SHEAR LOAD [lb]	70 9
max axial - shear load [N]	315.1
MAX SHEAR - ELEMENT ID	10058
MAX SHEAR - LOAD CASE ID	95
MAX SHEAR - AXIAL LOAD [lb]	3 3
max shear - axial load [N]	14.5
MAX SHEAR - SHEAR LOAD [lb]	105 5
max shear - shear load [N]	469 2
MAX COMBINED - LOAD CASE ID	SAME AS MAX SHEAR
MAX COMBINED - AXIAL LOAD [lb]	
max combined - axial load [N]	
MAX COMBINED - SHEAR LOAD [lb]	
max combined - shear load [N]	

FAIL SAFE CONFIGURATION SUMMARY OF MARGINS FOR BOLTS	
MOS CALCULATION - CONFIGURATION ID	FLIGHT FAIL SAFE
JOINT SEPARATION	12 53 (MAX AXIAL)
DIRECT TENSION ULTIMATE	95 45 (MAX AXIAL)
TOTAL TENSION ULTIMATE	1.01 (MAX AXIAL)
DIRECT THREAD SHEAR ULTIMATE	179 05 (MAX AXIAL)
TOTAL THREAD SHEAR ULTIMATE	2 72 (MAX AXIAL)
SHEAR ULTIMATE	3 45 (MAX SHEAR)
BENDING ULTIMATE	> 10
COMBINED SHEAR, TENSION AND BENDING ULTIMATE	0 93 (MAX SHEAR)
FAIL SAFE CONFIGURATION MINIMUM ULTIMATE MOS	0.93

FAIL SAFE CONFIGURATION SUMMARY OF MARGINS FOR BEARING FLANGES	
FLANGE 1 - BEARING ULTIMATE	>10
FLANGE 2 - BEARING ULTIMATE	>10
FAIL SAFE CONFIGURATION MINIMUM MOS	>10

Table 6-3: Joint 3 nominal and fail safe analyses (flight)

6.4 JOINT 4 (FLIGHT)

JUNCTION PROPERTIES	
BOLT	NAS1351N3
WASHER 1	NAS620 C10
WASHER 2	NA
NUT	NA
INSERT	MS21209 F1-10
INSERT IN FLANGE	2
NUMBER OF FLANGES	2
LUBRICATED	NO
FLANGE 1 NAME	POS WALLS
FLANGE 1 MATERIAL	Al7075T7351
FLANGE 1 MATERIAL SPEC	AMS-QQ-A-250/12
FLANGE 1 THICKNESS [in]	0.118
FLANGE 1 HOLE DIAMETER [in]	0.21
FLANGE 2 NAME	POS WALLS
FLANGE 2 MATERIAL	Al7075T7351
FLANGE 2 MATERIAL SPEC	AMS-QQ-A-250/12
FLANGE 2 THICKNESS [in]	0.18
FLANGE 2 HOLE DIAMETER [in]	0.21

LOADS	
MAX AXIAL - CONFIGURATION ID	NOMINAL
MAX AXIAL - ELEMENT ID	11890
MAX AXIAL - LOAD CASE ID	32
MAX AXIAL - AXIAL LOAD [lb]	63.5
max axial - axial load [N]	282.3
MAX AXIAL - SHEAR LOAD [lb]	66.6
max axial - shear load [N]	296.1
MAX SHEAR - CONFIGURATION ID	NOMINAL
MAX SHEAR - ELEMENT ID	11460
MAX SHEAR - LOAD CASE ID	96
MAX SHEAR - AXIAL LOAD [lb]	0.6
max shear - axial load [N]	2.4
MAX SHEAR - SHEAR LOAD [lb]	108.2
max shear - shear load [N]	481.0
MAX COMBINED - CONFIGURATION ID	NOMINAL
MAX COMBINED - ELEMENT ID	SAME AS MAX AXIAL
MAX COMBINED - LOAD CASE ID	
MAX COMBINED - AXIAL LOAD [lb]	
max combined - axial load [N]	
MAX COMBINED - SHEAR LOAD [lb]	
max combined - shear load [N]	

FACTORS OF SAFETY	
ULTIMATE (for nominal configuration)	2.0
ULTIMATE (for fail safe configuration)	1.0
YIELD (only for nominal configuration)	1.25
JOINT SEPARATION (for nominal configuration)	1.2
JOINT SEPARATION (for fail safe configuration)	1.0
FITTING FACTOR	1.15

BOLT & INSERT DATA	
NOMINAL DIAMETER OF BOLT [in]	0.19
NUMBER OF THREADS/INCH [1/in]	32
TOTAL LENGHT OF BOLT [in]	0.5
LENGHT OF INSERT [in]	0.18
THREADED LENGHT [in]	0.5
MIN EXT DIAMETER OF INSERT [in]	0.236
DEPTH OF RECESS FOR INSERT [in]	0.02
HEIGHT OF NUT [in]	NA

WASHER DATA	
THICKNESS OF WASHER [in]	0.063
OUTER DIAMETER OF WASHER [in]	0.354
INNER DIAMETER OF WASHER [in]	0.195
BOLT HEAD DIAMETER [in]	0.3123

FLANGE DATA	
THICK OF FLANGE 1 [in]	0.118
THICK OF FLANGE 2 [in]	0.18
DIAMETER OF HOLE [in]	0.21

BOLT MATERIAL PROPERTY DATA	
TEMP FACTOR FOR ULTIMATE STRENGHT	0.94
TEMP FACTOR FOR YIELD STRENGHT	0.94
ULTIMATE TENSILE ALLOWABLE STRESS [ksi]	160
YIELD TENSILE ALLOWABLE STRESS [ksi]	110
TEMP FACTOR FOR MODULUS	0.94
MODULUS OF ELASTICITY [ksi]	29100
THERMAL COEFF - HOT [1E(-6)/deg]	9.1
THERMAL COEFF - COLD [1E(-6)/deg]	7.8

INSERT MATERIAL PROPERTY DATA	
TEMP FACTOR FOR ULTIMATE STRENGHT	0.94
ULTIMATE TENSILE ALLOWABLE STRESS [ksi]	150

NUT MATERIAL PROPERTY DATA	
TEMP FACTOR FOR ULTIMATE STRENGHT	NA
TENSILE ULTIMATE ALLOWABLE STRESS [psi]	NA
ULTIMATE AXIAL LOAD [lb]	NA

WASHER MATERIAL PROPERTY DATA	
TEMP FACTOR FOR MODULUS	1
MODULUS OF ELASTICITY [ksi]	29100

FLANGE MATERIAL PROPERTY DATA	
TEMP FACTOR FOR MODULUS OF FLANGE 1	0.94
TEMP FACTOR FOR MODULUS OF FLANGE 2	0.94
TEMP FACTOR FOR ULTIMATE STRENGHT OF FLANGE 2	0.94
ULTIMATE SHEAR ALLOWABLE STRESS OF FLANGE 2 [psi]	27000
MODULUS OF ELASTICITY FOR FLANGE 1 [ksi]	10500
MODULUS OF ELASTICITY FOR FLANGE 2 [ksi]	10500
THERMAL COEFF OF FLANGE 1 - HOT [1E(-6)/deg]	12.15
THERMAL COEFF OF FLANGE 1 - COLD [1E(-6)/deg]	11.5
THERMAL COEFF OF FLANGE 2 - HOT [1E(-6)/deg]	12.15
THERMAL COEFF OF FLANGE 2 - COLD [1E(-6)/deg]	11.5
ULTIMATE BEARING ALLOWABLE STRESS FOR FLANGE 1 [psi]	95870
YIELD BEARING ALLOWABLE STRESS FOR FLANGE 1 [psi]	74260
ULTIMATE BEARING ALLOWABLE STRESS FOR FLANGE 2 [psi]	95870
YIELD BEARING ALLOWABLE STRESS FOR FLANGE 2 [psi]	74260

TORQUE AND PRELOAD DATA	
MAX TORQUE [lb in]	32.0
max torque [N m]	3.6
MIN TORQUE [lb in]	30.0
min torque [N m]	3.4
COEFFICIENT OF UTILIZATION [%]	60
LOADING PLANE FACTOR	0.5
PRELOAD UNCETRAINTY	0.35
TORQUE COEFFICIENT	0.2

SUMMARY OF MARGINS FOR BOLTS	
MOS CALCULATION - CONFIGURATION ID	NOMINAL
JOINT SEPARATION	4.42 (MAX AXIAL)
DIRECT TENSION ULTIMATE	18.82 (MAX AXIAL)
DIRECT TENSION YIELD	20.8 (MAX AXIAL)
TOTAL TENSION ULTIMATE	1.35 (MAX AXIAL)
TOTAL TENSION YIELD	0.63 (MAX AXIAL)
DIRECT THREAD SHEAR ULTIMATE	10.23 (MAX AXIAL)
TOTAL THREAD SHEAR ULTIMATE	0.33 (MAX AXIAL)
SHEAR ULTIMATE	5.36 (MAX SHEAR)
BENDING ULTIMATE	> 10
COMBINED SHEAR, TENSION AND BENDING ULTIMATE	1.339 (MAX SHEAR)
NOMINAL CONFIGURATION MINIMUM MOS	0.33
NOMINAL CONFIGURATION MINIMUM ULTIMATE MOS	0.33

NOMINAL CONFIGURATION SUMMARY OF MARGINS FOR BEARING FLANGES	
FLANGE 1 - BEARING ULTIMATE	8.55
FLANGE 1 - BEARING YIELD	>10
FLANGE 2 - BEARING ULTIMATE	>10
FLANGE 2 - BEARING YIELD	>10
NOMINAL CONFIGURATION MINIMUM MOS	8.55 (ULT-FL 1)

FAIL SAFE CONFIGURATION IDENTIFICATION	
FAIL SAFE FAILED BOLT CONFIGURATION	FLIGHT FAIL SAFE
FAIL SAFE 1 FAILED BOLT ID	11890

FAIL SAFE CONFIGURATION BOLT LOADS	
MAX AXIAL - ELEMENT ID	11883
MAX AXIAL - LOAD CASE ID	4
MAX AXIAL - AXIAL LOAD [lb]	48.5
max axial - axial load [N]	215.4
MAX AXIAL - SHEAR LOAD [lb]	50.2
max axial - shear load [N]	223.0
MAX SHEAR - ELEMENT ID	11460
MAX SHEAR - LOAD CASE ID	96
MAX SHEAR - AXIAL LOAD [lb]	0.2
max shear - axial load [N]	0.5
MAX SHEAR - SHEAR LOAD [lb]	107.9
max shear - shear load [N]	479.6
MAX COMBINED - LOAD CASE ID	20
MAX COMBINED - AXIAL LOAD [lb]	42.7
max combined - axial load [N]	189.5
MAX COMBINED - SHEAR LOAD [lb]	100.7
max combined - shear load [N]	447.7

FAIL SAFE CONFIGURATION SUMMARY OF MARGINS FOR BOLTS	
MOS CALCULATION - CONFIGURATION ID	FLIGHT FAIL SAFE
JOINT SEPARATION	7.52 (MAX AXIAL)
DIRECT TENSION ULTIMATE	50.91 (MAX AXIAL)
TOTAL TENSION ULTIMATE	1.38 (MAX AXIAL)
DIRECT THREAD SHEAR ULTIMATE	28.39 (MAX AXIAL)
TOTAL THREAD SHEAR ULTIMATE	0.35 (MAX AXIAL)
SHEAR ULTIMATE	11.75 (MAX SHEAR)
BENDING ULTIMATE	> 10
COMBINED SHEAR, TENSION AND BENDING ULTIMATE	1.38 (MAX COMB)
FAIL SAFE CONFIGURATION MINIMUM ULTIMATE MOS	0.35

FAIL SAFE CONFIGURATION SUMMARY OF MARGINS FOR BEARING FLANGES	
FLANGE 1 - BEARING ULTIMATE	>10
FLANGE 2 - BEARING ULTIMATE	>10
FAIL SAFE CONFIGURATION MINIMUM MOS	>10

Table 6-4: Joint 4 nominal and fail safe analyses (flight)

6.5 JOINT 5 (FLIGHT)

JUNCTION PROPERTIES	
BOLT	NAS1351N3
WASHER 1	NAS620C10
WASHER 2	NA
NUT	NA
INSERT	MS21209 F1-10
INSERT IN FLANGE	2
NUMBER OF FLANGES	2
LUBRICATED	NO
FLANGE 1 NAME	PDS WALLS
FLANGE 1 MATERIAL	Al7075T7351
FLANGE 1 MATERIAL SPEC	AMS-QQ-A-250/12
FLANGE 1 THICKNESS [in]	0.197
FLANGE 1 HOLE DIAMETER [in]	0.21
FLANGE 2 NAME	PDS WALLS
FLANGE 2 MATERIAL	Al7075T7351
FLANGE 2 MATERIAL SPEC	AMS-QQ-A-250/12
FLANGE 2 THICKNESS [in]	0 18
FLANGE 2 HOLE DIAMETER [in]	0 21

LOADS	
MAX AXIAL - CONFIGURATION ID	NOMINAL
MAX AXIAL - ELEMENT ID	6685212
MAX AXIAL - LOAD CASE ID	12
MAX AXIAL - AXIAL LOAD [lb]	64 1
max axial - axial load [N]	284.7
MAX AXIAL - SHEAR LOAD [lb]	60 1
max axial - shear load [N]	267.2
MAX SHEAR - CONFIGURATION ID	NOMINAL
MAX SHEAR - ELEMENT ID	6685198
MAX SHEAR - LOAD CASE ID	95
MAX SHEAR - AXIAL LOAD [lb]	57.1
max shear - axial load [N]	253.7
MAX SHEAR - SHEAR LOAD [lb]	259 0
max shear - shear load [N]	1151.7
MAX COMBINED - CONFIGURATION ID	NOMINAL
MAX COMBINED - ELEMENT ID	SAME AS MAX SHEAR
MAX COMBINED - LOAD CASE ID	
MAX COMBINED - AXIAL LOAD [lb]	
max combined - axial load [N]	
MAX COMBINED - SHEAR LOAD [lb]	
max combined - shear load [N]	

FACTORS OF SAFETY	
ULTIMATE (for nominal configuration)	2.0
ULTIMATE (for fail safe configuration)	1 0
YIELD (only for nominal configuration)	1 25
JOINT SEPARATION (for nominal configuration)	1 2
JOINT SEPARATION (for fail safe configuration)	1 0
FITTING FACTOR	1.15

BOLT & INSERT DATA	
NOMINAL DIAMETER OF BOLT [in]	0 19
NUMBER OF THREADS/INCH [1/in]	32
TOTAL LENGHT OF BOLT [in]	0 5
LENGHT OF INSERT [in]	0.18
THREADED LENGHT [in]	0.5
MIN EXT DIAMETER OF INSERT [in]	0 236
DEPTH OF RECESS FOR INSERT [in]	0 02
HEIGHT OF NUT [in]	NA

WASHER DATA	
THICKNESS OF WASHER [in]	0 063
OUTER DIAMETER OF WASHER [in]	0 35
INNER DIAMETER OF WASHER [in]	0 195
BOLT HEAD DIAMETER [in]	0 312

FLANGE DATA	
THICK OF FLANGE 1 [in]	0 197
THICK OF FLANGE 2 [in]	0 18
DIAMETER OF HOLE [in]	0 21

BOLT MATERIAL PROPERTY DATA	
TEMP FACTOR FOR ULTIMATE STRENGHT	0 94
TEMP FACTOR FOR YIELD STRENGHT	0 94
ULTIMATE TENSILE ALLOWABLE STRESS [ksi]	160
YIELD TENSILE ALLOWABLE STRESS [ksi]	110
TEMP FACTOR FOR MODULUS	0 94
MODULUS OF ELASTICITY [ksi]	29100
THERMAL COEFF - HOT [1E(-6)/deg]	9.1
THERMAL COEFF - COLD [1E(-6)/deg]	7 8

INSERT MATERIAL PROPERTY DATA	
TEMP FACTOR FOR ULTIMATE STRENGHT	0 94
ULTIMATE TENSILE ALLOWABLE STRESS [ksi]	150

NUT MATERIAL PROPERTY DATA	
TEMP FACTOR FOR ULTIMATE STRENGHT	NA
TENSILE ULTIMATE ALLOWABLE STRESS [psi]	NA
ULTIMATE AXIAL LOAD [lb]	NA

WASHER MATERIAL PROPERTY DATA	
TEMP FACTOR FOR MODULUS	1
MODULUS OF ELASTICITY [ksi]	29100

FLANGE MATERIAL PROPERTY DATA	
TEMP FACTOR FOR MODULUS OF FLANGE 1	0 94
TEMP FACTOR FOR MODULUS OF FLANGE 2	0.94
TEMP FACTOR FOR ULTIMATE STRENGHT OF FLANGE 2	0 94
ULTIMATE SHEAR ALLOWABLE STRESS OF FLANGE 2 [psi]	27000
MODULUS OF ELASTICITY FOR FLANGE 1 [ksi]	10500
MODULUS OF ELASTICITY FOR FLANGE 2 [ksi]	10500
THERMAL COEFF OF FLANGE 1 - HOT [1E(-6)/deg]	12 15
THERMAL COEFF OF FLANGE 1 - COLD [1E(-6)/deg]	11 5
THERMAL COEFF OF FLANGE 2 - HOT [1E(-6)/deg]	12 15
THERMAL COEFF OF FLANGE 2 - COLD [1E(-6)/deg]	11 5
ULTIMATE BEARING ALLOWABLE STRESS FOR FLANGE 1 [psi]	95870
YIELD BEARING ALLOWABLE STRESS FOR FLANGE 1 [psi]	74260
ULTIMATE BEARING ALLOWABLE STRESS FOR FLANGE 2 [psi]	95870
YIELD BEARING ALLOWABLE STRESS FOR FLANGE 2 [psi]	74260

TORQUE AND PRELOAD DATA	
MAX TORQUE [lb in]	32 0
max torque [N m]	3.6
MIN TORQUE [lb in]	30 0
min torque [N m]	3.4
COEFFICIENT OF UTILIZATION [%]	61
LOADING PLANE FACTOR	0 5
PRELOAD UNCETRAINTY	0 35
TORQUE COEFFICIENT	0 2

SUMMARY OF MARGINS FOR BOLTS	
MOS CALCULATION - CONFIGURATION ID	NOMINAL
JOINT SEPARATION	4 33 (MAX AXIAL)
DIRECT TENSION ULTIMATE	18 64 (MAX AXIAL)
DIRECT TENSION YIELD	20 6 (MAX AXIAL)
TOTAL TENSION ULTIMATE	1 36 (MAX AXIAL)
TOTAL TENSION YIELD	0 632 (MAX AXIAL)
DIRECT THREAD SHEAR ULTIMATE	10 12 (MAX AXIAL)
TOTAL THREAD SHEAR ULTIMATE	0 34 (MAX AXIAL)
SHEAR ULTIMATE	1 66 (MAX SHEAR)
BENDING ULTIMATE	> 10
COMBINED SHEAR, TENSION AND BENDING ULTIMATE	0 89 (MAX SHEAR)
NOMINAL CONFIGURATION MINIMUM MOS	0 34
NOMINAL CONFIGURATION MINIMUM ULTIMATE MOS	0 34

NOMINAL CONFIGURATION SUMMARY OF MARGINS FOR BEARING FLANGES	
FLANGE 1 - BEARING ULTIMATE	5 66
FLANGE 1 - BEARING YIELD	7 25
FLANGE 2 - BEARING ULTIMATE	5 08
FLANGE 2 - BEARING YIELD	6 54
NOMINAL CONFIGURATION MINIMUM MOS	5 08 (ULT-FL 2)

FAIL SAFE CONFIGURATION IDENTIFICATION	
FAIL SAFE FAILED BOLT CONFIGURATION	FLIGHT FAIL SAFE
FAIL SAFE 1 FAILED BOLT ID	6685212

FAIL SAFE CONFIGURATION BOLT LOADS	
MAX AXIAL - ELEMENT ID	6685197
MAX AXIAL - LOAD CASE ID	95
MAX AXIAL - AXIAL LOAD [lb]	58 3
max axial - axial load [N]	259 2
MAX AXIAL - SHEAR LOAD [lb]	211 2
max axial - shear load [N]	939 1
MAX SHEAR - ELEMENT ID	6685211
MAX SHEAR - LOAD CASE ID	128
MAX SHEAR - AXIAL LOAD [lb]	-7 3
max shear - axial load [N]	-32 2
MAX SHEAR - SHEAR LOAD [lb]	266 2
max shear - shear load [N]	1184 0
MAX COMBINED - LOAD CASE ID	95
MAX COMBINED - AXIAL LOAD [lb]	57 3
max combined - axial load [N]	254 9
MAX COMBINED - SHEAR LOAD [lb]	259 4
max combined - shear load [N]	1154
MAX COMBINED - ELEMENT ID	6685198

FAIL SAFE CONFIGURATION SUMMARY OF MARGINS FOR BOLTS	
MOS CALCULATION - CONFIGURATION ID	FLIGHT FAIL SAFE
JOINT SEPARATION	5 03 (MAX AXIAL)
DIRECT TENSION ULTIMATE	42 18 (MAX AXIAL)
TOTAL TENSION ULTIMATE	1 38 (MAX AXIAL)
DIRECT THREAD SHEAR ULTIMATE	23 45 (MAX AXIAL)
TOTAL THREAD SHEAR ULTIMATE	0 35 (MAX AXIAL)
SHEAR ULTIMATE	4 17 (MAX SHEAR)
BENDING ULTIMATE	> 10
COMBINED SHEAR, TENSION AND BENDING ULTIMATE	1 28 (COMBINED)
FAIL SAFE CONFIGURATION MINIMUM ULTIMATE MOS	0 35

FAIL SAFE CONFIGURATION SUMMARY OF MARGINS FOR BEARING FLANGES	
FLANGE 1 - BEARING ULTIMATE	>10
FLANGE 2 - BEARING ULTIMATE	>10
FAIL SAFE CONFIGURATION MINIMUM MOS	>10

Table 6-5: Joint 5 nominal and fail safe analyses (flight)

6.6 JOINT 6 (FLIGHT)

JUNCTION PROPERTIES	
BOLT	DIN 985 A M2 5
WASHER 1	NA
WASHER 2	NA
NUT	NA
INSERT	TBD
INSERT IN FLANGE	2
NUMBER OF FLANGES	2
LUBRICATED	NO
FLANGE 1 NAME	Covers
FLANGE 1 MATERIAL	Mumetall
FLANGE 1 MATERIAL SPEC	TBD
FLANGE 1 THICKNESS [in]	0 039
FLANGE 1 HOLE DIAMETER [in]	0.102
FLANGE 2 NAME	Boards
FLANGE 2 MATERIAL	AL 7075 T7352
FLANGE 2 MATERIAL SPEC	TBD
FLANGE 2 THICKNESS [in]	0 787
FLANGE 2 HOLE DIAMETER [in]	0 165

FACTORS OF SAFETY	
ULTIMATE (for nominal configuration)	2 0
ULTIMATE (for fail safe configuration)	1 0
YIELD (only for nominal configuration)	1 3
JOINT SEPARATION (for nominal configuration)	1 2
JOINT SEPARATION (for fail safe configuration)	1 0
FITTING FACTOR	1 2

TEMPERATURE DATA	
ASSEMBLY TEMPERATURE [°F]	68
MAX TEMPERATURE [°F]	122
MIN TEMPERATURE [°F]	32

BOLT & INSERT DATA	
NOMINAL DIAMETER OF BOLT [in]	0 099
NUMBER OF THREADS/INCH [1/in]	48
TOTAL LENGHT OF BOLT [in]	0 157
LENGHT OF INSERT [in]	0.189
THREADED LENGHT [in]	0 157
MIN EXT DIAMETER OF INSERT [in]	0 165
DEPTH OF RECESS FOR INSERT [in]	0
HEIGHT OF NUT [in]	NA

WASHER DATA	
THICKNESS OF WASHER [in]	NA
OUTER DIAMETER OF WASHER [in]	NA
INNER DIAMETER OF WASHER [in]	NA
BOLT HEAD DIAMETER [in]	0.185

FLANGE DATA	
THICK OF FLANGE 1 [in]	0 039
THICK OF FLANGE 2 [in]	0.787
DIAMETER OF HOLE [in]	0 102

BOLT MATERIAL PROPERTY DATA	
TEMP FACTOR FOR ULTIMATE STRENGHT	0.94
TEMP FACTOR FOR YIELD STRENGHT	0.94
ULTIMATE TENSILE ALLOWABLE STRESS [ksi]	58.02
YIELD TENSILE ALLOWABLE STRESS [ksi]	46 41
TEMP FACTOR FOR MODULUS	0.94
MODULUS OF ELASTICITY [ksi]	30457.92
THERMAL COEFF - HOT [1E(-6)/degF]	9.10
THERMAL COEFF - COLD [1E(-6)/degF]	7 80

INSERT MATERIAL PROPERTY DATA	
TEMP FACTOR FOR ULTIMATE STRENGHT	0 94
ULTIMATE TENSILE ALLOWABLE STRESS [ksi]	67.999

NUT MATERIAL PROPERTY DATA	
TEMP FACTOR FOR ULTIMATE STRENGHT	NA
TENSILE ULTIMATE ALLOWABLE STRESS [psi]	NA
ULTIMATE AXIAL LOAD [lb]	NA

WASHER MATERIAL PROPERTY DATA	
TEMP FACTOR FOR MODULUS	NA
MODULUS OF ELASTICITY [ksi]	NA

FLANGE MATERIAL PROPERTY DATA	
TEMP FACTOR FOR MODULUS OF FLANGE 1	1
TEMP FACTOR FOR MODULUS OF FLANGE 2	1
TEMP FACTOR FOR ULTIMATE STRENGHT OF FLANGE 2	0.94
ULTIMATE SHEAR ALLOWABLE STRESS OF FLANGE 2 [psi]	40799.70
MODULUS OF ELASTICITY FOR FLANGE 1 [ksi]	24656.42
MODULUS OF ELASTICITY FOR FLANGE 2 [ksi]	10300
THERMAL COEFF OF FLANGE 1 - HOT [1E(-6)/degF]	7.50
THERMAL COEFF OF FLANGE 1 - COLD [1E(-6)/degF]	7.50
THERMAL COEFF OF FLANGE 2 - HOT [1E(-6)/degF]	12 15
THERMAL COEFF OF FLANGE 2 - COLD [1E(-6)/degF]	11.50
ULTIMATE BEARING ALLOWABLE STRESS FOR FLANGE 1 [psi]	13634
YIELD BEARING ALLOWABLE STRESS FOR FLANGE 1 [psi]	13634
ULTIMATE BEARING ALLOWABLE STRESS FOR FLANGE 2 [psi]	95870
YIELD BEARING ALLOWABLE STRESS FOR FLANGE 2 [psi]	74260

TORQUE AND PRELOAD DATA	
MAX TORQUE [lb in]	2.600
max torque [N m]	0 294
MIN TORQUE [lb in]	2.400
min torque [N m]	0 271
COEFFICIENT OF UTILIZATION [%]	93 470
LOADING PLANE FACTOR	0.5
PRELOAD UNCETRAINTY	0.35
TORQUE COEFFICIENT	0 20

LOADS	
MAX AXIAL - CONFIGURATION ID	NOMINAL
MAX AXIAL - ELEMENT ID	13382884
MAX AXIAL - LOAD CASE ID	24
MAX AXIAL - AXIAL LOAD [lb]	1 3
max axial - axial load [N]	5.5
MAX AXIAL - SHEAR LOAD [lb]	2.6
max axial - shear load [N]	11.2
MAX SHEAR - CONFIGURATION ID	NOMINAL
MAX SHEAR - ELEMENT ID	13383838
MAX SHEAR - LOAD CASE ID	20 0
MAX SHEAR - AXIAL LOAD [lb]	1 0
max shear - axial load [N]	4 4
MAX SHEAR - SHEAR LOAD [lb]	4 0
max shear - shear load [N]	17 7
MAX COMBINED - CONFIGURATION ID	NOMINAL
MAX COMBINED - ELEMENT ID	SAME AS MAX AXIAL
MAX COMBINED - LOAD CASE ID	
MAX COMBINED - AXIAL LOAD [lb]	
max combined - axial load [N]	
MAX COMBINED - SHEAR LOAD [lb]	
max combined - shear load [N]	

SUMMARY OF MARGINS FOR BOLTS	
MOS CALCULATION - CONFIGURATION ID	NOMINAL
JOINT SEPARATION	34 08 (MAX AXIAL)
DIRECT TENSION ULTIMATE	87 73 (MAX AXIAL)
DIRECT TENSION YIELD	112 57 (MAX AXIAL)
TOTAL TENSION ULTIMATE	0 37 (MAX AXIAL)
TOTAL TENSION YIELD	0 094 (MAX AXIAL)
DIRECT THREAD SHEAR ULTIMATE	172 59 (MAX AXIAL)
TOTAL THREAD SHEAR ULTIMATE	1 67 (MAX AXIAL)
SHEAR ULTIMATE	13 46 (MAX SHEAR)
BENDING ULTIMATE	> 10
COMBINED SHEAR, TENSION AND BENDING ULTIMATE	0 366 (MAX AXIAL)
NOMINAL CONFIGURATION MINIMUM MOS	0 094
NOMINAL CONFIGURATION MINIMUM ULTIMATE MOS	0.366

NOMINAL CONFIGURATION SUMMARY OF MARGINS FOR BEARING FLANGES	
FLANGE 1 - BEARING ULTIMATE	4 972
FLANGE 1 - BEARING YIELD	8.555
FLANGE 2 - BEARING ULTIMATE	>10
FLANGE 2 - BEARING YIELD	>10
NOMINAL CONFIGURATION MINIMUM MOS	4 97 (ULT-FL 2)

FAIL SAFE CONFIGURATION IDENTIFICATION	
FAIL SAFE FAILED BOLT CONFIGURATION	FLIGHT FAIL SAFE
FAIL SAFE 1 FAILED BOLT ID	13382884

FAIL SAFE CONFIGURATION BOLT LOADS	
MAX AXIAL - ELEMENT ID	13384050
MAX AXIAL - LOAD CASE ID	12
MAX AXIAL - AXIAL LOAD [lb]	1 3
max axial - axial load [N]	5 5
MAX AXIAL - SHEAR LOAD [lb]	2 3
max axial - shear load [N]	9 9
MAX SHEAR - ELEMENT ID	13382881
MAX SHEAR - LOAD CASE ID	20
MAX SHEAR - AXIAL LOAD [lb]	0 8
max shear - axial load [N]	3.4
MAX SHEAR - SHEAR LOAD [lb]	6 6
max shear - shear load [N]	29 1
MAX COMBINED - LOAD CASE ID	4.0
MAX COMBINED - AXIAL LOAD [lb]	1.3
max combined - axial load [N]	5 4
MAX COMBINED - SHEAR LOAD [lb]	2 7
max combined - shear load [N]	11 6
MAX COMBINED - ELEMENT ID	13384050

FAIL SAFE CONFIGURATION SUMMARY OF MARGINS FOR BOLTS	
MOS CALCULATION - CONFIGURATION ID	FLIGHT FAIL SAFE
JOINT SEPARATION	41.1 (MAX AXIAL)
DIRECT TENSION ULTIMATE	176.46 (MAX AXIAL)
TOTAL TENSION ULTIMATE	0 37 (MAX AXIAL)
DIRECT THREAD SHEAR ULTIMATE	346.18 (MAX AXIAL)
TOTAL THREAD SHEAR ULTIMATE	1 68 (MAX AXIAL)
SHEAR ULTIMATE	16.52 (MAX SHEAR)
BENDING ULTIMATE	> 10
COMBINED SHEAR, TENSION AND BENDING ULTIMATE	0 37 (MAX AXIAL)
FAIL SAFE CONFIGURATION MINIMUM ULTIMATE MOS	0 370

FAIL SAFE CONFIGURATION SUMMARY OF MARGINS FOR BEARING FLANGES	
FLANGE 1 - BEARING ULTIMATE	>10
FLANGE 2 - BEARING ULTIMATE	>10
FAIL SAFE CONFIGURATION MINIMUM MOS	>10

Table 6-6: Joint 6 nominal and fail safe analyses (flight)

Author: Paolo Ruzza

PDS: evaluation of μ-Metal shields thermal impacts

Introduction

Some μ-metal shields have to be applied on some internal components of PDS. Moreover on all the boards a numetal cover on one side is foreseen.

The aim of this document is to provide some evaluations on the thermal impact these shields would provide.

Implemented modifications to the thermal models

In order to analyze the behaviour of PDS with the applied μ-metal shields some modifications to the TMM and GMM have been implemented:

- One surface on the GMM has been added modelling the cover on detailed PB2 board (boards shields);

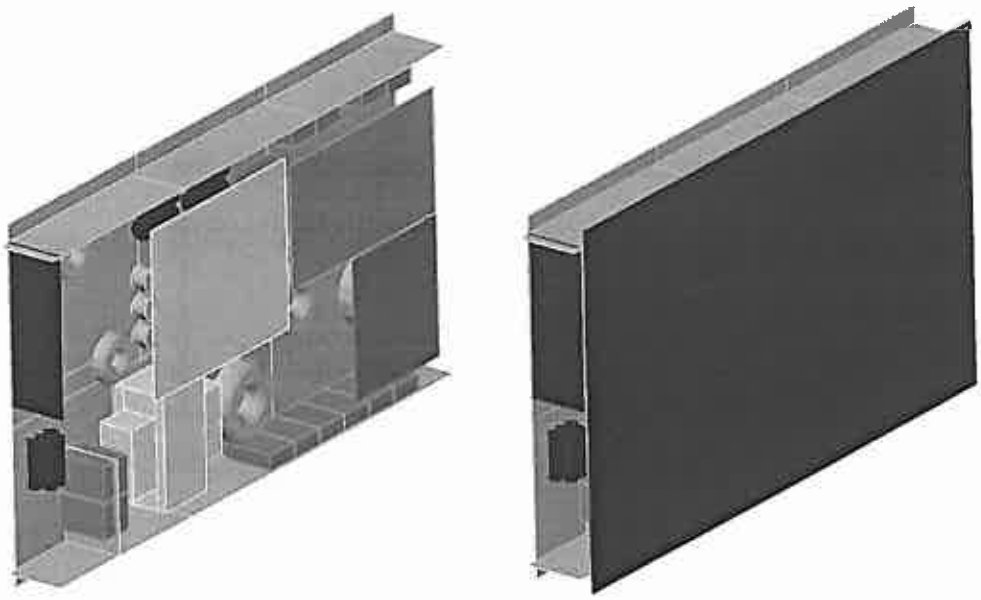

- The thermal optical properties of the T1 have been modified: in a conservative approach the emissivity for the T1 has been considered equal to 0.01, making the item almost adiabatic from the radiative point of view. The only thermal path enable remains the conductivity to the bracket (components shields). This has been implemented in the model in order to simulate the shield on the T1 applied with a glue with a low thermal conductance.

Considering the cover on PB2 board, since the emissivity for the μ-metal is unknown (and strongly depend from the final surface treatment or coverage), a sensitivity analysis has been performed to understand the behaviour of the covered PB2 with the variation of μ-metal emissivity.

Questo documento contiene informazioni di proprietà di CARLO GAVAZZI SPACE SpA: Tutti i diritti sono riservati
All information contained in this document are property of CARLO GAVAZZI SPACE SpA. All right reserved.

Results

The results are presented hereafter:

For every item the temperature reached during the TEST (TRP @ 53°C) is indicated with the variations from the original calculated temperature (PDS without shields).

The temperatures of the mezzanine and the mosfet on it have a larger increase due to the proximity to the board shield. High emissivity coverage for the board shields is suggested.

T1 shields have a minor impact and are as well included in the presented results.

The analyzed items (PB2 boards and T1) are the most critical in PDS. All the evaluation done for these items can be used – in a conservative way – also for others boards and components.

Questo documento contiene informazioni di proprietà di CARLO GAVAZZI SPACE SpA: Tutti i diritti sono riservati
All information contained in this document are property of CARLO GAVAZZI SPACE SpA. All right reserved.

	COVER EMISSIVITY EPS = 0.25		EPS = 0.5		EPS = 0.7		EPS = 0.84 (e.g.: black paint or silvered Teflon tape)	
Node Description	Test Temperature [°C] μ-metal	DeltaT	Test Temperature [°C] μ-metal	DeltaT	Test Temperature [°C] μ-metal	DeltaT	Test Temperature [°C] μ-metal	DeltaT
PCB mezzanine AUX DCDC	109.5	13.3	101.4	5.2	99.4	3.2	98.4	2.3
PCB mezzanine FPGA	71.3	1.9	71.1	1.7	71.2	1.8	71.2	1.8
PCB mezzanine piccolo	78.4	3.7	77.2	2.4	76.8	2.0	76.6	1.8
PCB front panel	72.9	2.4	71.8	1.3	71.5	1.1	71.4	0.9
PCB RADIATOR side	84.2	0.7	83.9	0.3	83.8	0.3	83.8	0.2
PCB RADIATOR side	100.2	3.4	98.5	1.7	98.1	1.2	97.8	0.9
PCB RADIATOR side	77.7	1.7	77.0	1.0	76.8	0.8	76.7	0.6
PCB Mid Wall side	73.6	2.4	72.4	1.2	72.1	0.9	71.9	0.7
PCB Mid Wall side	73.3	2.3	72.1	1.2	71.9	0.9	71.7	0.7
PCB Mid Wall side	66.2	1.1	65.9	0.7	65.8	0.6	65.7	0.6
Upper Bracket, Radiator Plate side	83.8	0.5	83.5	0.3	83.5	0.2	83.4	0.1
Upper Bracket, Radiator Plate side AD590	79.6	0.7	79.2	0.4	79.1	0.3	79.0	0.2
PCB center	101.4	4.8	98.7	2.2	98.1	1.5	97.7	1.1
Center PCB front edge	78.9	1.5	78.1	0.8	77.9	0.6	77.8	0.5
transformer T1	76.9	0.4	76.7	0.1	76.7	0.1	76.6	0.1
Mosfet output Q21	57.6	0.5	57.4	0.3	57.3	0.3	57.3	0.2
Mosfet output Q20	57.4	0.5	57.3	0.3	57.2	0.2	57.2	0.2
Mosfet output Q25	56.8	0.3	56.7	0.2	56.7	0.2	56.7	0.2
Mosfet output Q24	56.7	0.3	56.7	0.2	56.7	0.2	56.6	0.2

Questo documento contiene informazioni di proprietà di CARLO GAVAZZI SPACE SpA: Tutti i diritti sono riservati
All information contained in this document are property of CARLO GAVAZZI SPACE SpA. All right reserved.

L3 inductor	81.5	2.5	80.2	1.3	80.0	1.0	79.8	0.8
TD2 transformer	75.7	3.2	74.0	1.6	73.7	1.3	73.4	1.0
TD 1 transformer	99.4	4.5	97.1	2.2	96.5	1.6	96.0	1.1
L4 inductor (L LEAKAGE)	113.4	3.7	111.5	1.8	111.0	1.3	110.6	1.0
L5 inductor (L DIFF)	115.8	4.4	113.6	2.2	112.9	1.5	112.5	1.1
L1 inductor (L COMMON)	86.6	2.0	85.7	1.2	85.5	1.0	85.3	0.8
Mosfet In-rush Q10	86.3	0.8	85.9	0.4	85.8	0.3	85.7	0.3
Mosfet In-rush Q11	85.9	0.8	85.6	0.4	85.5	0.3	85.4	0.3
Mosfet PRIMARY Q4	109.1	1.2	108.5	0.6	108.3	0.4	108.2	0.3
Mosfet PRIMARY Q1	109.1	1.1	108.5	0.5	108.3	0.4	108.2	0.3
Mosfet PRIMARY Q3	106.6	0.9	106.1	0.5	106.0	0.3	105.9	0.2
Mosfet PRIMARY Q2	106.3	0.9	105.9	0.5	105.8	0.3	105.7	0.3
Mosfet SECONDARY Q5	86.9	0.6	86.6	0.3	86.5	0.2	86.5	0.2
Mosfet SECONDARY Q6	86.9	0.6	86.6	0.3	86.6	0.2	86.5	0.2
Mosfet SECONDARY Q7	86.9	0.6	86.6	0.3	86.6	0.2	86.5	0.2
Mosfet SECONDARY Q8	86.9	0.6	86.6	0.3	86.5	0.2	86.5	0.2
Mosfet on Mezzanine	120.8	13.0	112.9	5.2	110.9	3.1	110.0	2.2
controller	96.9	2.9	95.4	1.4	95.1	1.1	94.9	0.9
Tantalium Condenser	80.7	5.4	77.7	2.5	77.0	1.8	76.6	1.3
Tantalium Condenser	79.5	5.0	76.9	2.3	76.3	1.7	75.9	1.4
Snubber resistors	85.1	0.7	84.8	0.3	84.7	0.3	84.7	0.2
DRIVERS transistors	89.6	3.6	87.7	1.7	87.2	1.3	87.0	1.0
DRIVERS transistors	89.8	3.5	87.9	1.7	87.5	1.3	87.2	1.0
DRIVERS transistors	90.1	3.8	88.1	1.8	87.7	1.4	87.5	1.2
DRIVERS transistors	90.6	3.9	88.5	1.9	88.1	1.5	87.8	1.2
DRIVERS transistors	90.8	3.9	88.7	1.9	88.3	1.4	88.0	1.1
DRIVERS transistors	90.7	4.0	88.6	1.9	88.2	1.4	87.8	1.1
DRIVERS transistors	89.4	3.5	87.5	1.7	87.1	1.3	86.8	1.0

Questo documento contiene informazioni di proprietà di CARLO GAVAZZI SPACE SpA: Tutti i diritti sono riservati
All information contained in this document are property of CARLO GAVAZZI SPACE SpA. All right reserved.

DRIVERS transistors	88.7	3.2	87.0	1.5	86.6	1.1	86.4	0.9
DRIVERS transistors	87.8	3.1	86.3	1.5	85.9	1.2	85.7	0.9
bracket pad	73.3	2.4	72.1	1.2	71.9	1.0	71.7	0.8
PCB board edge, Radiator side	77.9	0.4	77.7	0.2	77.6	0.1	77.6	0.1
PCB board edge, Radiator side	75.3	0.7	74.9	0.3	74.8	0.2	74.7	0.2
Al Plate for Transformer T1	75.8	0.4	75.6	0.2	75.5	0.1	75.5	0.1
T bracket node	84.6	0.5	84.3	0.3	84.2	0.2	84.2	0.1
PCB board edge, Radiator side	72.1	0.5	71.8	0.3	71.8	0.2	71.7	0.2
PCB board edge, Mid Wall Side	57.0	0.5	56.8	0.2	56.8	0.2	56.7	0.2
PCB board edge, Mid Wall Side	56.9	0.4	56.7	0.2	56.7	0.2	56.7	0.2
PCB board edge, Mid Wall Side	56.3	0.3	56.1	0.2	56.1	0.2	56.1	0.1

Questo documento contiene informazioni di proprietà di CARLO GAVAZZI SPACE SpA: Tutti i diritti sono riservati
All information contained in this document are property of CARLO GAVAZZI SPACE SpA. All right reserved.