ORIGINALE ARCHIVIO

CARLO GAVAZZI

CARLO GAVAZZI SPACE SpA

AMS02-PDS

Tipo Doc.: *Doc.Type:*	IC			N° DRD: *DRD N°:*	DEL 088
N° Doc.: *Doc. N°:*	**PDS-IC-CGS-001**	Ediz.: *Issue:* **2**	Data: *Date:* **08/06/2009**	Pagina *Page* **1**	Di *Of* **92**
Titolo : *Title :*	PDS FM electrical/functional, mechanical ICD				

	Nome & Funzione *Name & Function*	Firma *Signature*	Data *Date*
Preparato da: *Prepared by:*	Alia S. (DT/EE/)		8-6-09
Approvato da: *Approved by:*	Grossi R. (DT/EE) Alia S. (System) Francini E. (PA/QA/) Cinquepalmi C. (PA/CC)		8/6/09 8-6-09 08/06/09 08/06/09
Applicazione autorizzata da: *Application authorized by:*	Olivier M. (PM)		08.06.09

Customer / Higher Level Contractor

Accettato da: *Accepted by:*			
Approvato da: *Approved by:*			

LISTA DI DISTRIBUZIONE *DISTRIBUTION LIST*	N	A	I
Interna / *Internal*			
Albertin A. (DT/EE/)	1	X	
Alia S. (System)	1	X	
Francini E. (PA/QA/)	1		X
Esterna / *External*			
Russo E. (ASI)	1		X

N=Numero di copie A=Applicazione I=Informazione
N=Number of copy A=Application I=Information

Gestione documenti: *Data Management:* Firma / *Signature* Data / *Date* 08/06/09

File: PDS-IC-CGS-001 Is2.doc

Questo documento contiene informazioni di proprietà di CARLO GAVAZZI SPACE SpA: Tutti i diritti sono riservati
All information contained in this document are property of CARLO GAVAZZI SPACE SpA. All right reserved.

REGISTRAZIONE DELLE MODIFICHE / *CHANGE RECORD*

EDIZIONE *ISSUE*	DATA *DATE*	AUTORIZZAZIONE *CHANGE AUTHORITY*	OGGETTO DELLA MODIFICA E SEZIONI AFFETTE *REASON FOR CHANGE AND AFFECTED SECTIONS*
1	28 March 2008	--	First issue
2	08/06/2009	Engineering Update	○ Page 9 Updated the mechanical ICD reference Issue and date ○ Page 24 Corrected the torque level for card retainer fixation in agreement with the updated mechanical ICD ○ Page 35 Corrected Tab. 5-4 for connector J101. The pin function where missing. ○ Page 57 Corrected document reference ○ Page 61 Corrected Fig. 5-11: some values of the power configuration set-up where missing ○ Page 71 Updated Fig. 5-22: trip intervention time modified in agreement with NCR-PDS-CGS-C-133 REV.1 ○ Page 81 Update Tab. 7-3: modified the ESEM3-B DEFAULT ON outlet status in agreement with NCR-PDS-CGS-C-134 ○ Page 90 Update Tab. 7-14: input stage telemetries range modification in agreement with PDS-WV-CGS-002-IS.1

Questo documento contiene informazioni di proprietà di CARLO GAVAZZI SPACE SpA: Tutti i diritti sono riservati
All information contained in this document are property of CARLO GAVAZZI SPACE SpA. All right reserved.

LISTA DELLE PAGINE VALIDE / *LIST OF VALID PAGES*

PAGINA *PAGE*	EDIZIONE *ISSUE*	PAGINA *PAGE*	EDIZIONE *ISSUE*	PAGINA *PAGE*	EDIZIONE *ISSUE*	PAGINA *PAGE*	EDIZIONE *ISSUE*	PAGINA *PAGE*	EDIZIONE *ISSUE*
1 - 92	2								
Annex A (1-3)	2								

Questo documento contiene informazioni di proprietà di CARLO GAVAZZI SPACE SpA. Tutti i diritti sono riservati.
All information contained in this document are property of CARLO GAVAZZI SPACE SpA. All right reserved.

TABLE OF CONTENT

1. SCOPE 8

2. RELEVANT DOCUMENTS 9

2.1 APPLICABLE DOCUMENTS 9
2.2 DEFINITIONS AND ACRONYMS 10

3. PDS INTERFACE IDENTIFICATION AND CLASSIFICATION 11

3.1 GENERAL FUNCTIONS DESCRIPTION 11
3.2 HIGH LEVEL INTERFACES LIST 12

4. MECHANICAL INTERFACES 13

4.1 PDS ACCOMODATION ON AMS02- WAKE RADIATOR 13
4.1.1 PDS HOUSING 14
4.1.1.1 CHASSIS 14
4.1.1.2 Removable handles 23
4.1.1.3 BOARDS (ESEMs) 23
4.1.1.3.1 Extraction and Insertion of ESEMs 24
4.1.1.3.2 Locking retainers 24
4.1.1.3.3 Extraction and Insertion of ESEMs 24

5. ELECTRICAL INTERFACES 25

5.1 INTERFACE DEFINITION 31
5.1.1 HARNESS INTERFACES 31
5.1.1.1 Connector location 31
5.1.1.2 ConnectorS list 34
5.1.1.3 Pin function 35
5.1.1.4 PDS End-User Connectors and Pinouts 49
5.1.1.4.1 120V (nominal) connections 49
5.2 POWER INTERFACE REQUIREMENTS 53
5.2.1 INPUT POWER CHARACTERISTICS 53
5.2.1.1 Steady state voltage range 53
5.2.1.2 ripple voltage spectrum 53
5.2.1.3 transient voltage 54
5.2.1.3.1 Normal transient voltage 54
5.2.1.3.2 Fault clearing and protection 54
5.2.1.3.3 Non normal voltage range 56
5.2.1.4 Input current rating 56
5.2.1.4.1 ISS POWER BUS Characteristics 56
5.2.1.4.1.1 input current characteristic (I peak – Inrush) 56
5.2.1.4.2 PVGF POWER BUS Characteristics 57
5.2.1.4.2.1 Input current characteristic (I peak – Inrush) 58
5.2.1.4.3 STS POWER SUPPLY Characteristics 58
5.2.1.4.3.1 Input current characteristic (I peak – Inrush) 58
5.2.1.5 Power input impedance 59
5.2.2 POWER DISSIPATION 60
5.3 GROUNDING AND ISOLATION 64
5.4 ELECTRICAL BONDING 65
5.5 POWER OUTPUTS 66
5.5.1 28V OUTPUT CARACTHERISTICS 66
5.5.1.1 Output voltage range 66
5.5.1.2 source Broad band voltage ripple 66
5.5.1.3 Load broad band voltage ripple 66
5.5.1.4 Source impedance 67
5.5.1.5 Load impedance 68

Questo documento contiene informazioni di proprietà di CARLO GAVAZZI SPACE SpA. Tutti i diritti sono riservati.
All information contained in this document are property of CARLO GAVAZZI SPACE SpA. All right reserved.

5.5.1.6 Abnormal operation ... 70
5.5.1.7 current rating ... 71
5.5.1.8 output protection ... 71
5.5.1.9 Load in-rush current slope ... 71
5.5.2 120V OUTPUT CHARACTHERISTIC ... 72
5.5.2.1 voltage range ... 72
5.5.2.2 Voltage ripple ... 72
5.5.2.3 OUTLET Source impedance ... 73
5.5.2.4 Load impedance ... 74
5.5.2.5 load Abnormal operation ... 75
5.5.2.6 Current rating ... 78
5.5.2.7 Output protection ... 79
5.5.2.8 Load in-rush current slope ... 79

6. THERMAL INTERFACE ... 80

7. DATA INTERFACE COMMUNICATION AND STATUS ... 81

7.1 PDS DEFAULT STATUS ... 81
7.1.1 BOARDS DEFAULT STATUS ... 81
7.1.2 28V CONVERTER DEFAULT STATUS ... 81
7.1.3 OUTLET DEFAULT STATUS ... 81
7.2 COMMUNICATION ... 83
7.2.1 DATA BUS INTERFACE ... 83
7.2.2 BUS CONTROL ... 83
7.2.3 PROGRAMMABILITY OF ADDRESS ... 83
7.2.4 PDS COMMINICATION PROCEDURE ... 83
7.2.5 AUTONOMOUS OPERATION ... 84
7.2.6 PDS MONITORING ... 84
7.2.6.1 Esem1-a monitoring/command ... 84
7.2.6.2 PB2 monitoring/command ... 85
7.2.6.3 ESEM3-A monitoring/command ... 86
7.2.6.4 ESEM3-B monitoring/command ... 87
7.2.7 ANALOGUE TELEMETRY ... 88
7.2.8 PDS TEST ... 91
7.2.8.1 ANALOGUE REFERENCE test ... 91
7.2.8.2 DIGITAL TEST ... 91

Questo documento contiene informazioni di proprietà di CARLO GAVAZZI SPACE SpA. Tutti i diritti sono riservati.
All information contained in this document are property of CARLO GAVAZZI SPACE SpA. All right reserved.

LIST OF TABLES

Tab. 5-1: PDS Electrical Interfaces Description 30
Tab. 5-2: PDS connectors list 34
Tab. 5-3: J100 pin function 35
Tab. 5-4: J101 pin function 35
Tab. 5-5 J102 pin function 35
Tab. 5-6: J103 pin function 36
Tab. 5-7: J104 pin function 36
Tab. 5-8: J110 pin function 37
Tab. 5-9: J111 pin function 38
Tab. 5-10: J112 pin function 39
Tab. 5-11: J113 pin function 40
Tab. 5-12: J120 pin function 41
Tab. 5-13: J200 pin function 41
Tab. 5-14: J201 pin function 41
Tab. 5-15: J202 pin function 42
Tab. 5-16: J203 pin function 42
Tab. 5-17: J204 pin function 43
Tab. 5-18: J210 pin function 44
Tab. 5-19: J211 pin function 45
Tab. 5-20: J212 pin function 45
Tab. 5-21: J213 pin function 46
Tab. 5-22: J220 pin function 46
Tab. 5-23: J121 pin function 47
Tab. 5-24: J221 pin function 47
Tab. 5-25: J300 pin function 48
Tab. 5-26: ISS Power Supply Characteristic 56
Tab. 5-27: PDS input current characteristic 56
Tab. 5-28: PVGF Power Supply Characteristic 57
Tab. 5-29: STS Power Supply Characteristic 58
Tab. 5-30: 120V current rating 78
Tab. 7-1: PDS board default status 81
Tab. 7-2: PDS 28V converter default status 81
Tab. 7-3: ESEM3-B outlet default status 81
Tab. 7-4: ESEM3-A #1 outlet default status 82
Tab. 7-5: ESEM3-A #2 outlet default status 82
Tab. 7-6: ESEM3-A #3 outlet default status 82
Tab. 7-7: ESEM3-A #4 outlet default status 82
Tab. 7-8: ESEM1-A Digital status/command flags and analog monitor 84
Tab. 7-9: PB2 Digital status/command flags and analog monitor 85
Tab. 7-10: ESEM 3-A Digital status/command flags and analog monitor 86
Tab. 7-11: ESEM3-B Digital status/command flags and analog monitor 88
Tab. 7-12: PDS board address and ADC channels – ID 30 88
Tab. 7-13: PDS board address and ADC channels – ID 31 89
Tab. 7-14: PDS telemetry conversion rule 90
Tab. 7-15: Boards analog reference 91

Questo documento contiene informazioni di proprietà di CARLO GAVAZZI SPACE SpA. Tutti i diritti sono riservati.
All information contained in this document are property of CARLO GAVAZZI SPACE SpA. All right reserved.

LIST OF FIGURES

Fig. 4-1: PDS accommodation on the AMS-02 13
Fig. 4-2: PDS assembled chassis 14
Fig. 4-3: PDS mechanical dimensions 15
Fig. 4-4: PDS rear panel – major distances 16
Fig. 4-5: PDS on WAKE RADIATOR 17
Fig. 4-6: PDS base plate 18
Fig. 4-7: PDS Mechanical Interface for outer and inner fixation screws 19
Fig. 4-8 Notes on baseplate material and surface treatment 19
Fig. 4-9: PDS bonding stud screw 19
Fig. 4-10: Right, front and left side 20
Fig. 4-11: front panel : link I/f 21
Fig. 4-12: motherboard frame : link I/f 22
Fig. 4-13: Boards order (view from front panel) 23
Fig. 5-1: PDS Vs AMS-02 Block Diagram 26
Fig. 5-2: PDS High Level Block Diagram 27
Fig. 5-3: PDS Electrical Architecture (ESEM boards) 28
Fig. 5-4: side A output grouping (the number beside each line name will indicate the number of pins HOT&RETURN allocated for each line with the exception of the input connectors where each line is explicit). 31
Fig. 5-5: side B output grouping (the number beside each line name will indicate the number of pins HOT&RETURN allocated for each line with the exception of the input connectors where each line is explicit). 32
Fig. 5-6: J300, J121 and J221allocation 33
Fig. 5-7: Maximum Input Voltage Ripple Susceptibility Limit (Spectral Components) 53
Fig. 5-8: PDS input Normal Voltage Transient 54
Fig. 5-9: fault clearing and protection transient limits 55
Fig. 5-10: Input impedance limits 59
Fig. 5-11: PDS Nominal power configuration 62
Fig. 5-12: PDS Step 4 Nominal power configuration – dissipation evaluation @ 120V input bus 62
Fig. 5-13: PDS Step 4 Nominal power configuration – dissipation evaluation @ 113V input bus 62
Fig. 5-14: PDS Dissipated Power Budget 63
Fig. 5-15: PDS grounding and isolation 64
Fig. 5-16: PDS internal bonding mechanical drawing 65
Fig. 5-17: 28V Source Impedance – Magnitude 67
Fig. 5-18: 28V Source Impedance – Phase Limits 67
Fig. 5-19: 28V Typical Minimum Load Impedance (all user absorbing 2.5A each) - Magnitude 68
Fig. 5-20: 28V Load Impedance – Phase Limits 69
Fig. 5-21: Voltage Transients for Abnormal Operations 28 VDC 70
Fig. 5-22: 28V output trip characteristic 71
Fig. 5-23: 120V Out maximum ripple voltage spectrum 72
Fig. 5-24: 120V source impedance 73
Fig. 5-25: 120V OUT Minimum Load Impedance Mask 74
Fig. 5-26: Load Impedance Phase Limits 74
Fig. 5-27: 120V Load Abnormal operation (369V 12usec) 75
Fig. 5-28: 120V Load Abnormal operation (200V 150usec) 76
Fig. 5-29: 120V Load Abnormal operation (157V 300usec) 76
Fig. 5-30: 120V Load Abnormal operation (- 123V 12usec) 77
Fig. 5-31: 120V Load Abnormal operation (0V 60msec) 77
Fig. 5-32: 120V out trip characteristic 79

Questo documento contiene informazioni di proprietà di CARLO GAVAZZI SPACE SpA. Tutti i diritti sono riservati.
All information contained in this document are property of CARLO GAVAZZI SPACE SpA. All right reserved.

1. SCOPE

The document corresponds to contract deliverable DEL 088

This Interface Control Document (ICD) defines and controls the mechanical, electrical, thermal, environment and crew interfaces as well as data interfaces (hardwired) to the users and the *Integrated Truss Segment (ITS) S3*, which will be accommodated in the *Payload Attached System (PAS) 2 location*.

Questo documento contiene informazioni di proprietà di CARLO GAVAZZI SPACE SpA. Tutti i diritti sono riservati.
All information contained in this document are property of CARLO GAVAZZI SPACE SpA. All right reserved.

2. RELEVANT DOCUMENTS

2.1 APPLICABLE DOCUMENTS

Documents here below identified are applicable and/or reference for the activities described in the present document and are considered part of it to the extent specified herein.

[AD] 1 SSP 57003 Attached Payload Interface Requirements Document

June 17 – 2003 Revision B

[AD] 2 SSP 57004 Attached Payload Hardware Interface Control Document Template

June 13 2003 Revision B

[AD] 3 AMS-RQ-CGS-002 Is.1 Power Distribution System (PDS) Specifications

April 2007

[AD] 4 10-AMS02PDS-000.02 Rev. A AMS02-PDS Interface Control Drawing

08/06/2009

Questo documento contiene informazioni di proprietà di CARLO GAVAZZI SPACE SpA. Tutti i diritti sono riservati.
All information contained in this document are property of CARLO GAVAZZI SPACE SpA. All right reserved.

2.2 DEFINITIONS AND ACRONYMS

ADC	Analog to Digital Converter
APCU	Assembly Power Converter Unit
BCS	Berthing Cue System
CAB	Cryomagnet Avionics Box
CCS	Cryomagnet Current Source
CE	Conductive Emission
CGS	Carlo Gavazzi Space
CM	Common Mode
CMD	Command
DEMUX	De-multiplexer
DM	Differential mode
EDAC	Error Detection And Correction
EBCS	External BCS
EEPROM	Electrical Erasable Programmable Read Only Memory
EGSE	Electrical Ground Support Equipment
EMC	Electro-Magnetic Compatibility
EMI	Electro-Magnetic Interference
ESD	Electro-Static Discharge
ESEM	Exchangeable Standard Electrical Module
EVA	External Vehicular Activities
FPGA	Field Programmable Gate Array
HW	Hardware
IAM	Interface Adapter Mechanical
IDD	Interface Data Document
I/F	Interface
I/O	Input/Output
ISS	International Space Station
MUX	Multiplexer
PVGF	Power & Video Grapple Fixture
RID	Review Item Disposition
ROM	Read Only Memory
R/W	Read/Write
RPDA	Remote Power Distribution Assembly
SPOE	Standard Payload Outfitting Equipment
S/S	Subsystem
SSRMS	pace Station Remote Manipulator System
STS	Space Transportation System
TBC	To Be Confirmed
TBD	To Be Designed
TRP	Temperature Reference Point
TTCB	Tracker Thermal Control Box
TTPD	Tracker Thermal Power Distribution
USCM	Universal Slow Control Module
USS	Unique Support Structure

Questo documento contiene informazioni di proprietà di CARLO GAVAZZI SPACE SpA. Tutti i diritti sono riservati.
All information contained in this document are property of CARLO GAVAZZI SPACE SpA. All right reserved.

3. PDS INTERFACE IDENTIFICATION AND CLASSIFICATION

3.1 GENERAL FUNCTIONS DESCRIPTION

The main PDS tasks can be summarized as follows:

- To manage 3 Inputs Power Busses at 120V:
  - ISS PWR input
  - STS PWR input
  - PVGF PWR input
- To guarantee the EMI requirement compatibility
- To distribute the protected 120V
- To convert the 120V input to 28V
- To distribute the protected 28V
- To allow a remote Control and Monitoring of the main unit parameters

Questo documento contiene informazioni di proprietà di CARLO GAVAZZI SPACE SpA. Tutti i diritti sono riservati.
All information contained in this document are property of CARLO GAVAZZI SPACE SpA. All right reserved.

3.2 HIGH LEVEL INTERFACES LIST

The PDS has the following main interfaces:

Mechanical (see Fig. 4-6 through Fig. 4-12)

Baseplate– AMS-02 radiator
Rear Wall – AMS-02 Radiator (bonding)
Motherboard frame - AMS-02 Links
Front panel - AMS-02 Links
Right wall - AMS-02 Links
Left wall - AMS-02 Links

electronic boards – housing (internal interface)
electronic boards- motherboard(internal interface)

Electrical

rear wall – Users (see Fig. 4-4)
rear wall – radiator (bonding)

Electronic boards – motherboard (internal interface)
motherboard – input stage/distribution board (internal interface)
input stage/distribution board – rear wall (internal interface)

Thermal

housing – AMS-02 radiator
electronic boards - housing

Data

CAN BUS I/F board – AMS-02 data system

Questo documento contiene informazioni di proprietà di CARLO GAVAZZI SPACE SpA. Tutti i diritti sono riservati.
All information contained in this document are property of CARLO GAVAZZI SPACE SpA. All right reserved.

4. MECHANICAL INTERFACES

The PDS box mechanical configuration consists of structural panels manufactured from AL7075 treated with Alodine, with the exception of the front panel that is white painted, and connected by means of screws.

4.1 PDS ACCOMODATION ON AMS02- WAKE RADIATOR

The PDS will be accommodated in the lower part of the wake radiator ad showed in the next picture.

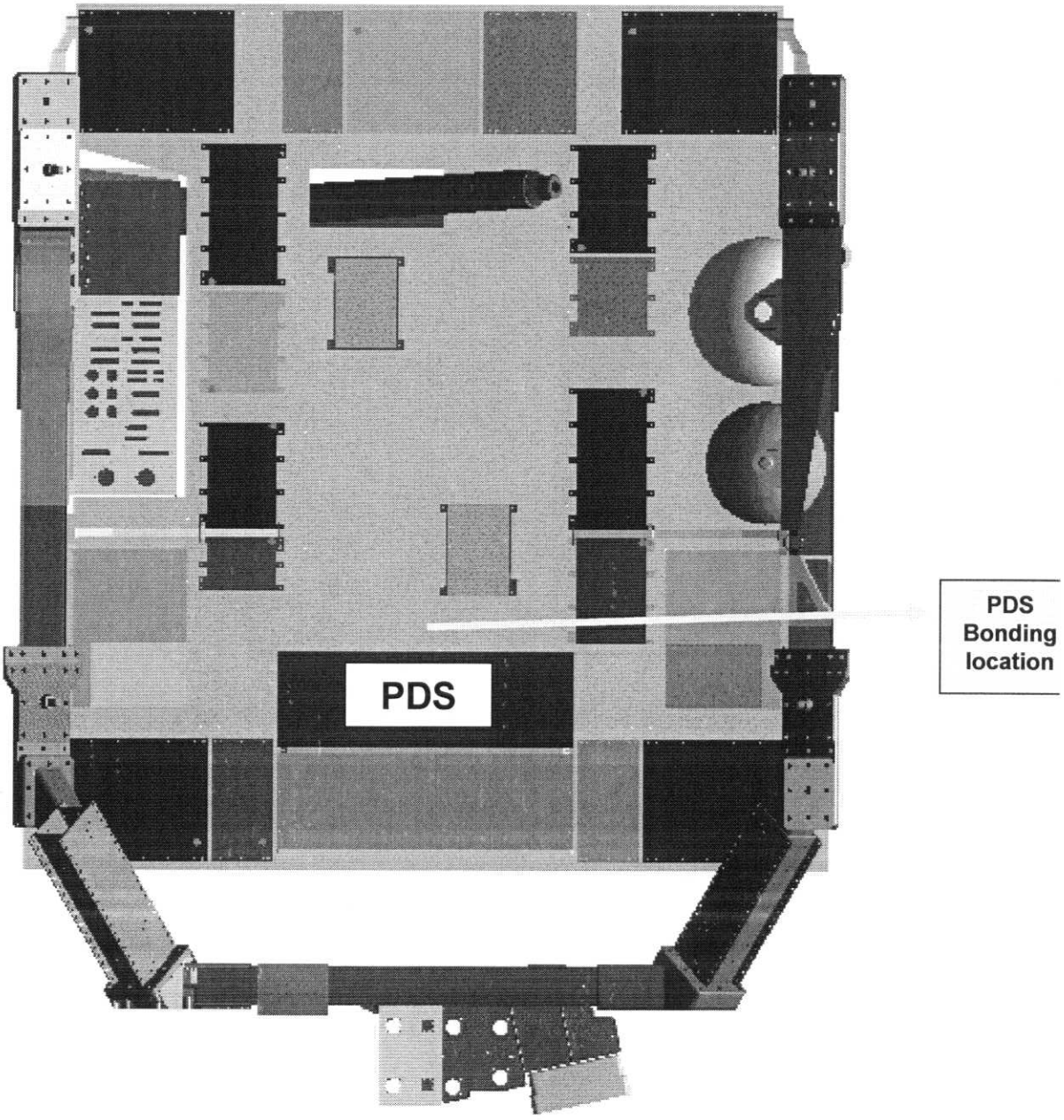

Fig. 4-1: PDS accommodation on the AMS-02

Questo documento contiene informazioni di proprietà di CARLO GAVAZZI SPACE SpA: Tutti i diritti sono riservati
All information contained in this document are property of CARLO GAVAZZI SPACE SpA. All right reserved.

4.1.1 PDS HOUSING

4.1.1.1 CHASSIS

The PDS final assembled chassis is showed in the next picture.

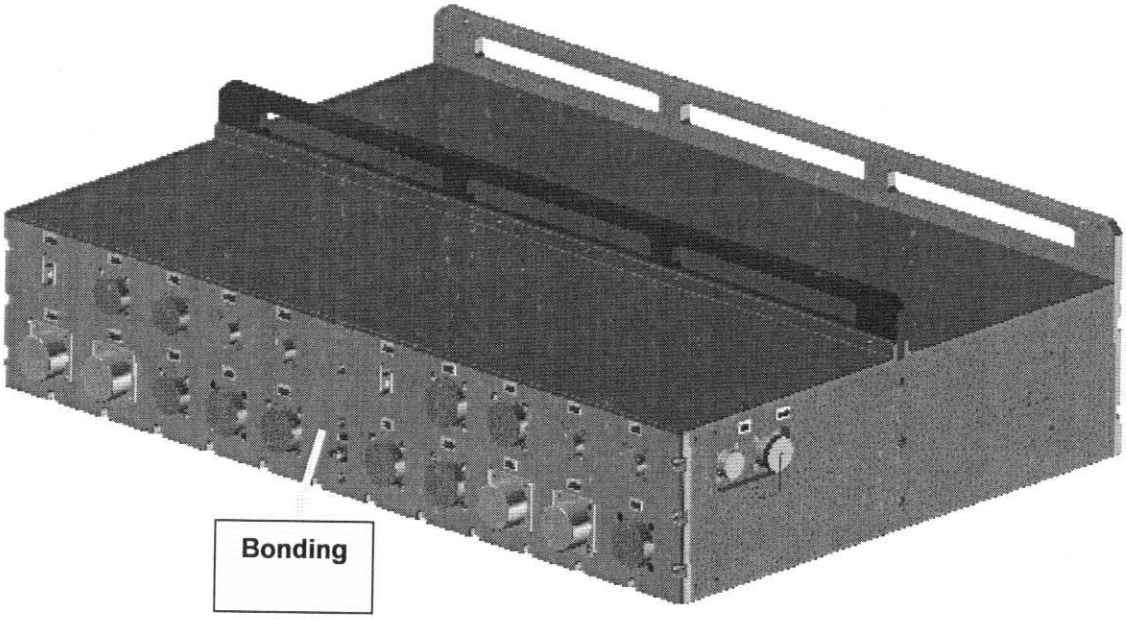

Fig. 4-2: PDS assembled chassis

As indicated in the next pictures, the overall dimensions of the PDS unit are:

width:	773 mm	
depth:	513 mm	(without connectors protrusion)
depth max:	533.6 mm	(with connectors protrusion)
height	157 mm	(without upper rail)
height max:	195,8 mm	(with upper rail)

Note:

Excluded from the envelope are:

- the removable handles
- heat pipes cooling system

PDS is fixed to the main radiator by means of fifty (50) screws size #10-32 (NAS1351 type).

Questo documento contiene informazioni di proprietà di CARLO GAVAZZI SPACE SpA. Tutti i diritti sono riservati.
All information contained in this document are property of CARLO GAVAZZI SPACE SpA. All right reserved.

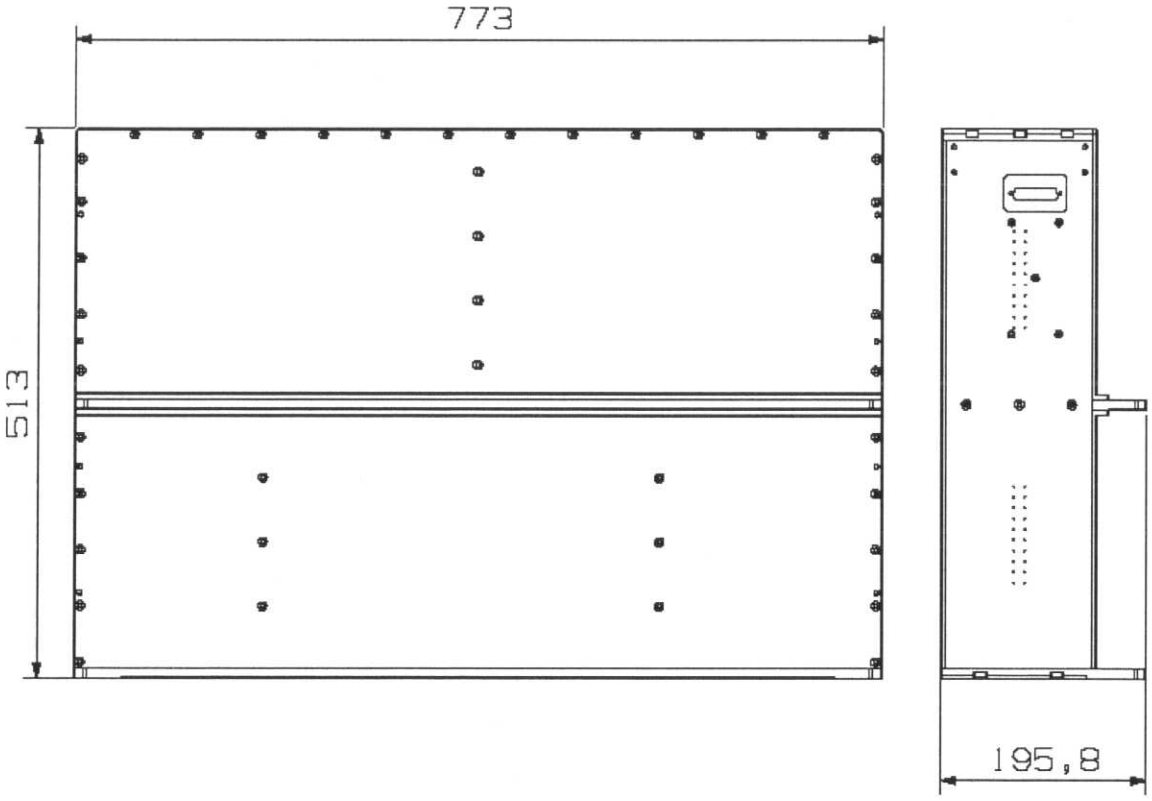

Fig. 4-3: PDS mechanical dimensions

Questo documento contiene informazioni di proprietà di CARLO GAVAZZI SPACE SpA. Tutti i diritti sono riservati.
All information contained in this document are property of CARLO GAVAZZI SPACE SpA. All right reserved.

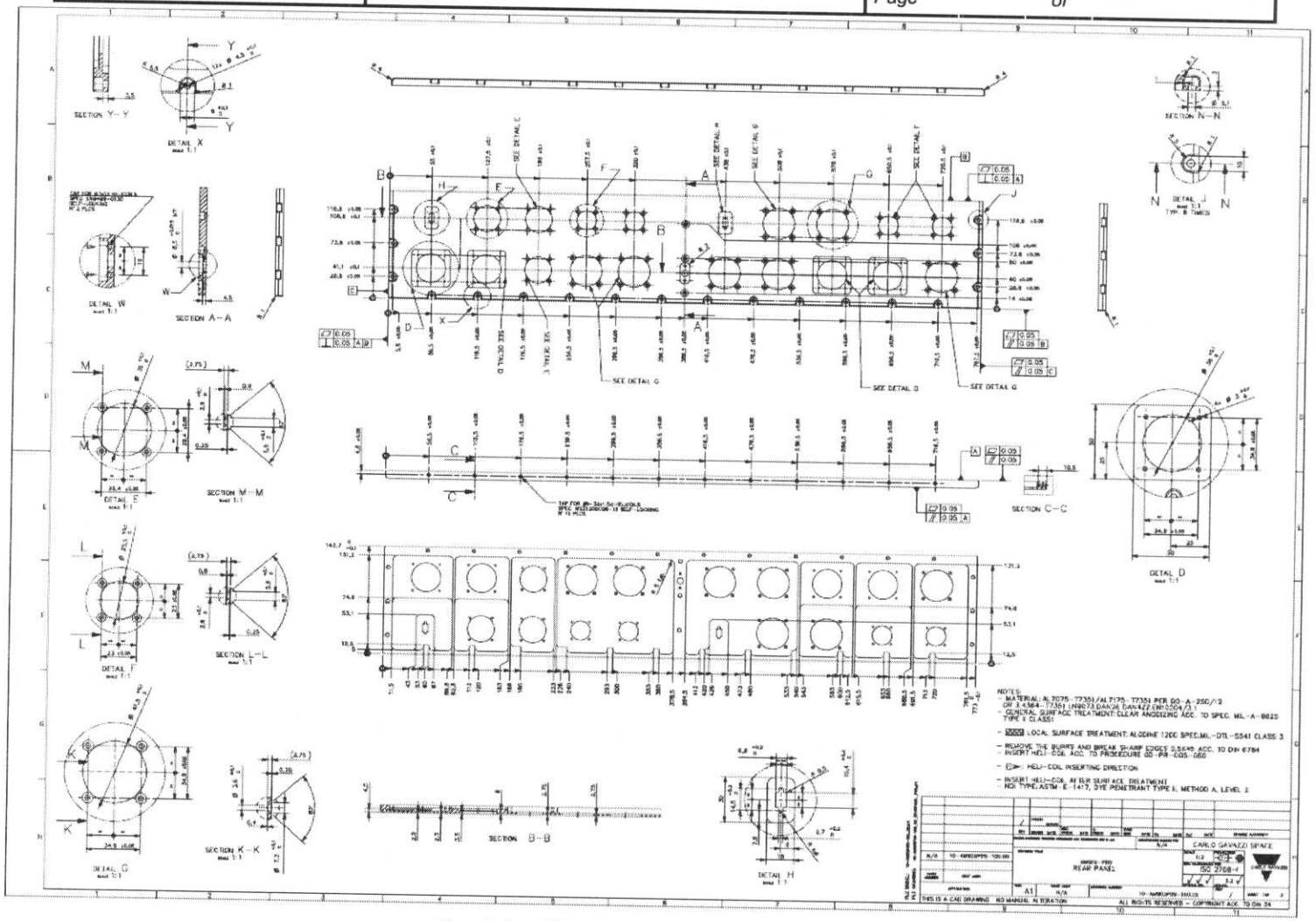

Fig. 4-4: PDS rear panel – major distances

Questo documento contiene informazioni di proprietà di CARLO GAVAZZI SPACE SpA: Tutti i diritti sono riservati
All information contained in this document are property of CARLO GAVAZZI SPACE SpA. All right reserved.

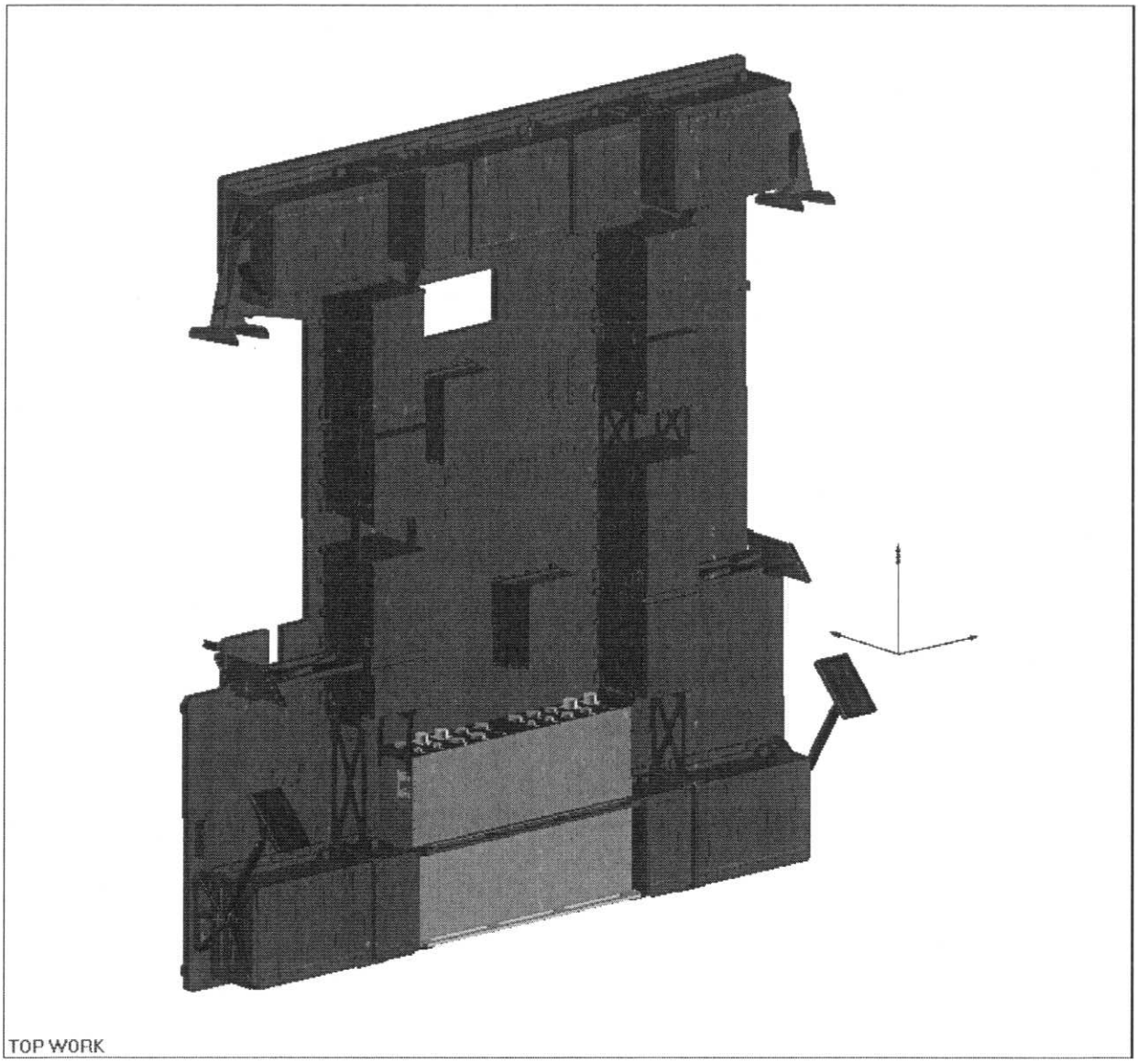

Fig. 4-5: PDS on WAKE RADIATOR

Questo documento contiene informazioni di proprietà di CARLO GAVAZZI SPACE SpA: Tutti i diritti sono riservati
All information contained in this document are property of CARLO GAVAZZI SPACE SpA. All right reserved.

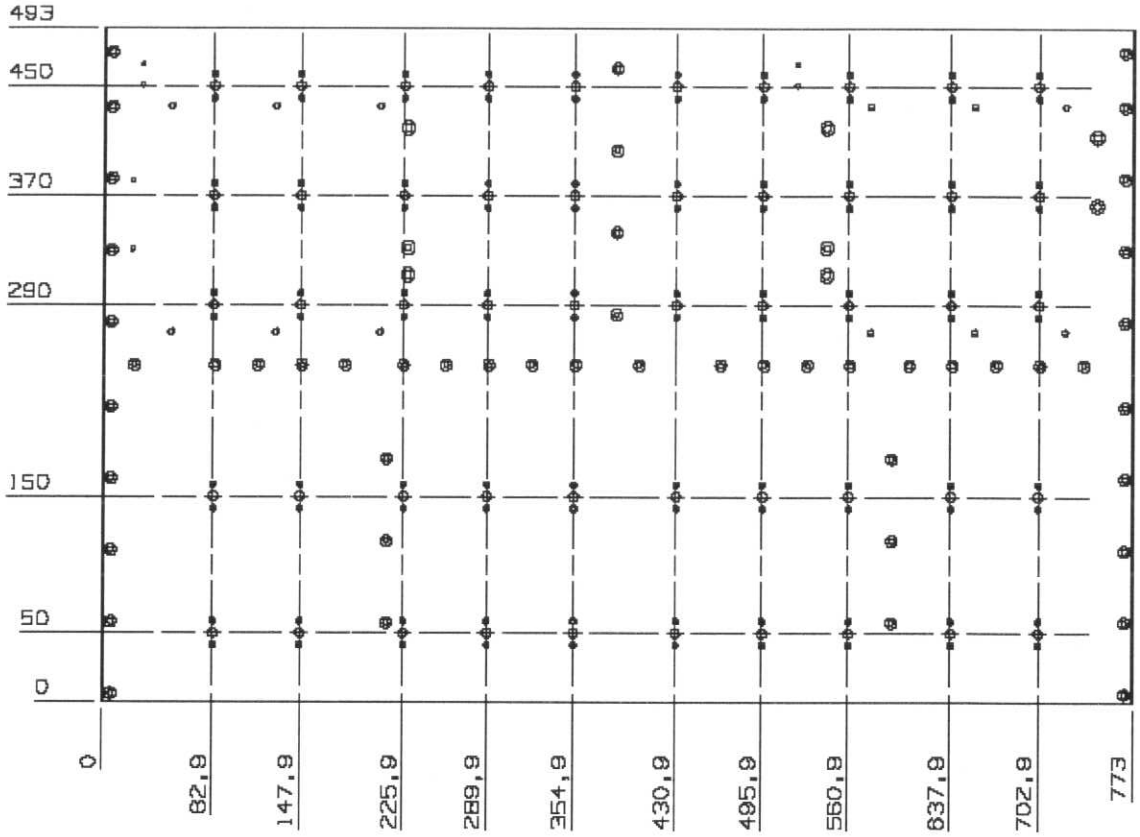

Fig. 4-6: PDS base plate

Questo documento contiene informazioni di proprietà di CARLO GAVAZZI SPACE SpA. Tutti i diritti sono riservati.
All information contained in this document are property of CARLO GAVAZZI SPACE SpA. All right reserved.

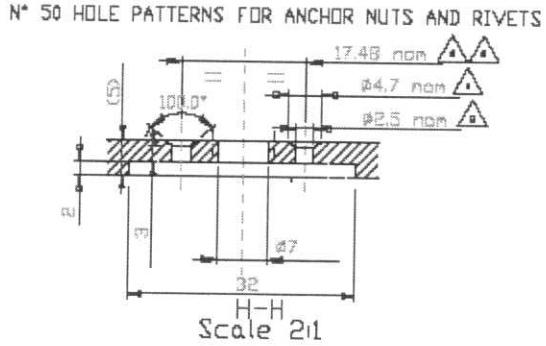

Fig. 4-7: PDS Mechanical Interface for outer and inner fixation screws

NOTES:

- MATERIAL : AL 7075 T7351 SPEC. QQ-A-250/12
- SURFACE TREATMENT : CLEAR ANODIZING ACC. TO SPEC. MIL-A-8625 TYPE II CLASS 1
- LOCAL SURFACE TREATMENT : ALODINE 1200 SPEC. MIL-C-5541 CLASS 3

Fig. 4-8 Notes on baseplate material and surface treatment

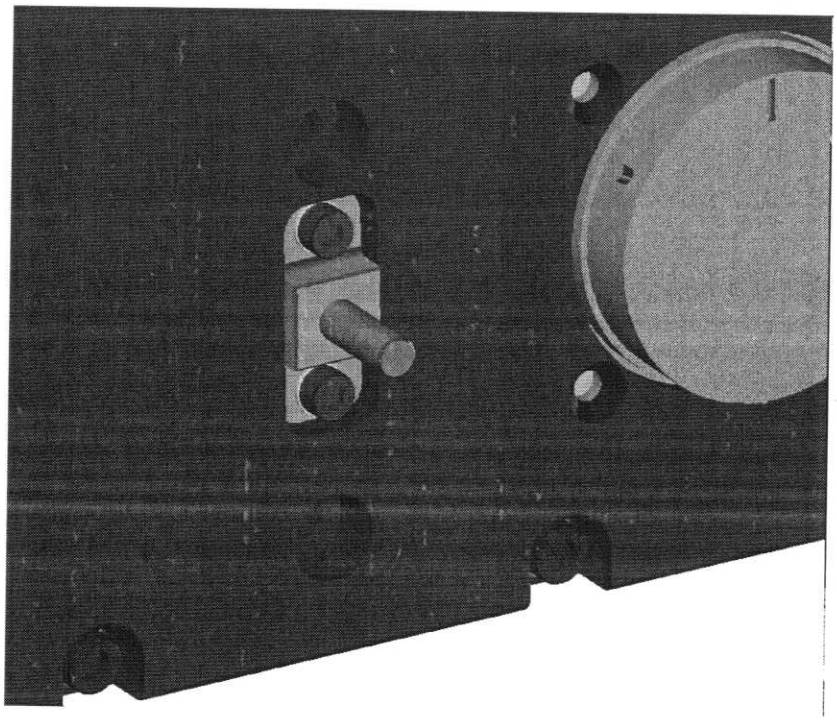

Fig. 4-9: PDS bonding stud screw

Questo documento contiene informazioni di proprietà di CARLO GAVAZZI SPACE SpA. Tutti i diritti sono riservati.
All information contained in this document are property of CARLO GAVAZZI SPACE SpA. All right reserved.

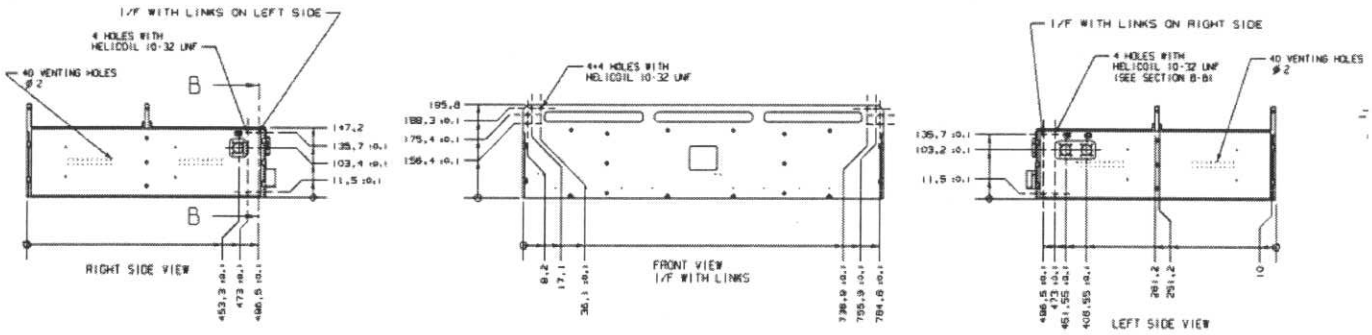

Fig. 4-10: Right, front and left side

Questo documento contiene informazioni di proprietà di CARLO GAVAZZI SPACE SpA. Tutti i diritti sono riservati.
All information contained in this document are property of CARLO GAVAZZI SPACE SpA. All right reserved.

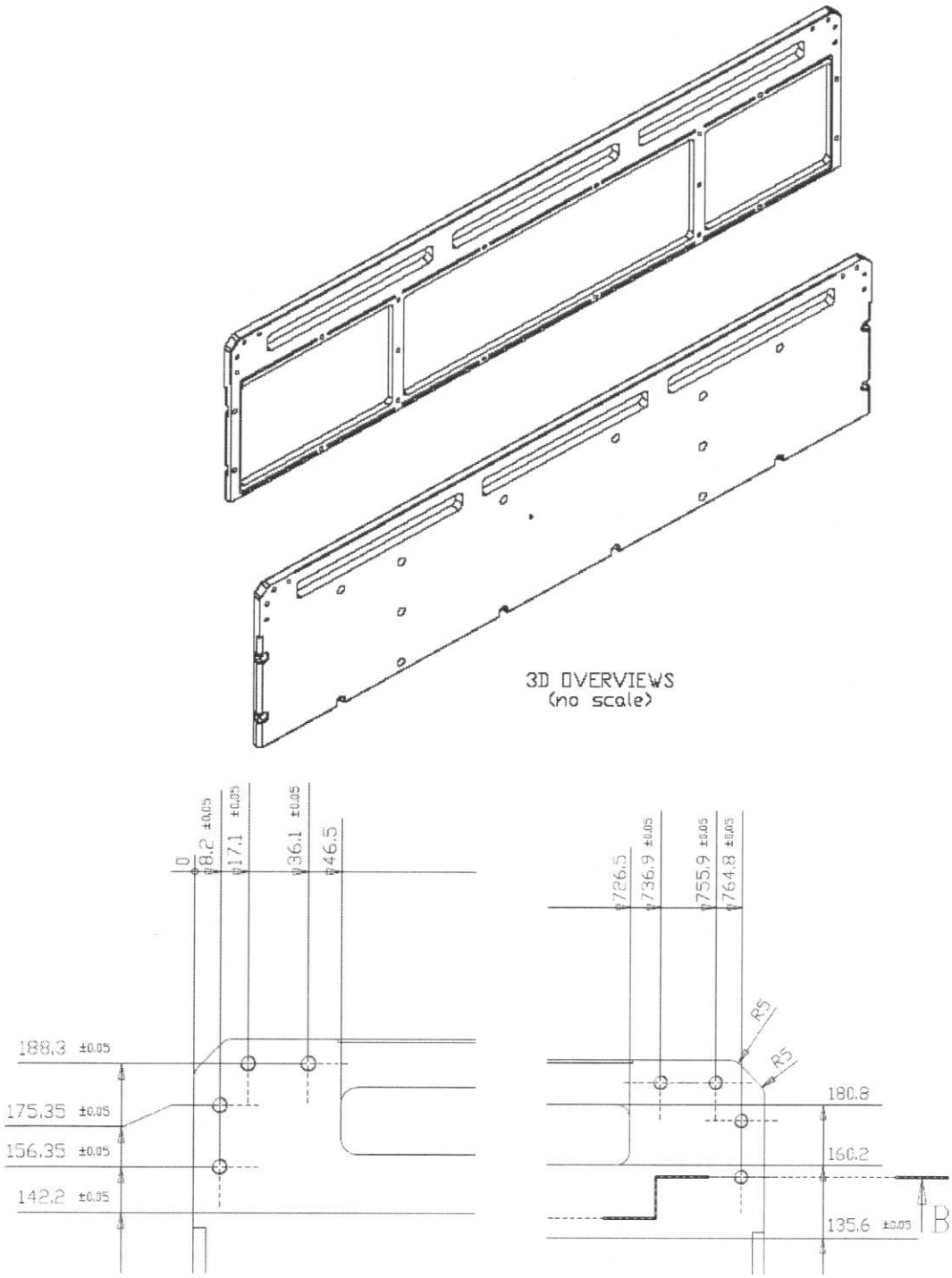

Fig. 4-11: front panel : link I/f

Questo documento contiene informazioni di proprietà di CARLO GAVAZZI SPACE SpA. Tutti i diritti sono riservati.
All information contained in this document are property of CARLO GAVAZZI SPACE SpA. All right reserved.

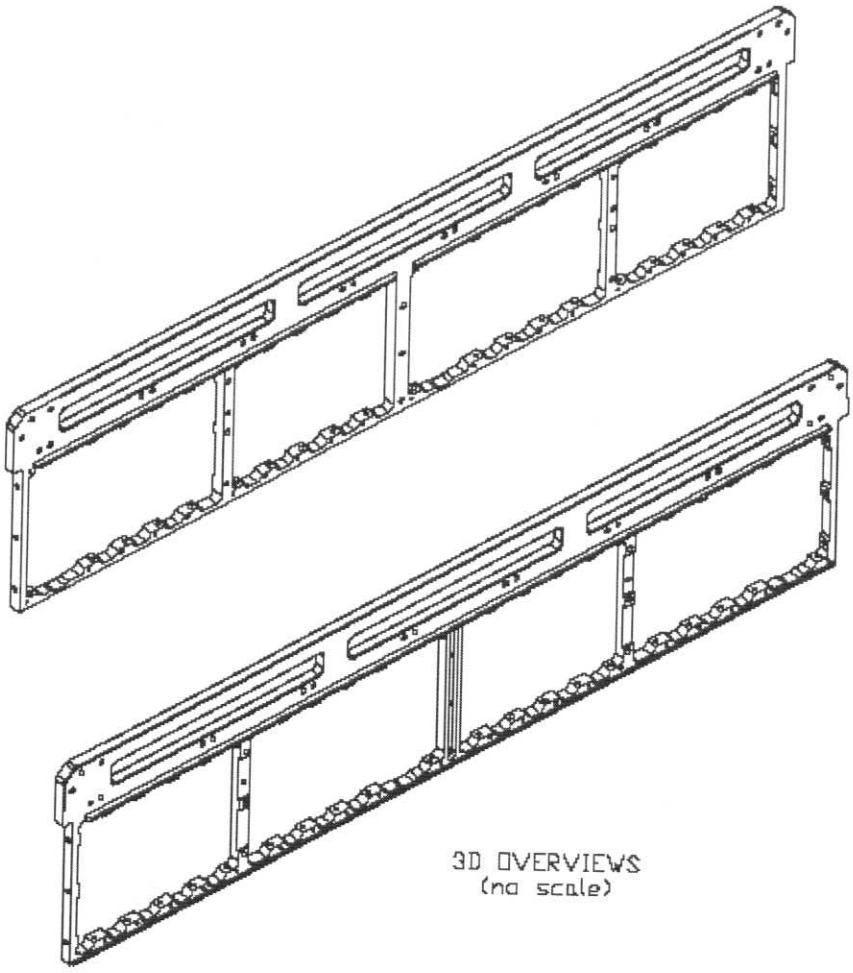

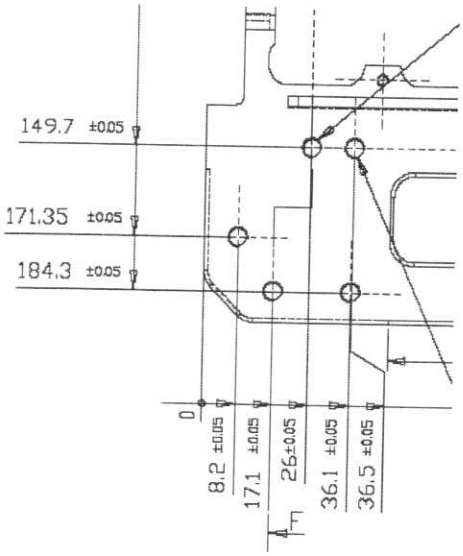

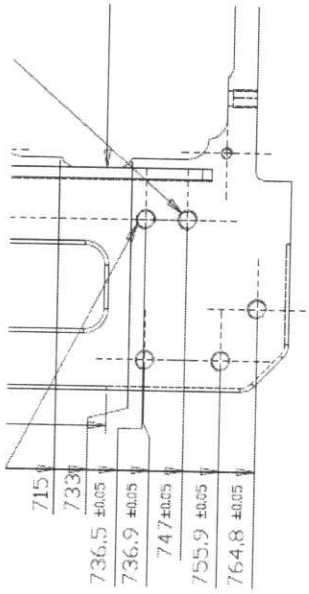

Fig. 4-12: motherboard frame : link I/f

Questo documento contiene informazioni di proprietà di CARLO GAVAZZI SPACE SpA. Tutti i diritti sono riservati.
All information contained in this document are property of CARLO GAVAZZI SPACE SpA. All right reserved.

For further mechanical details please refer to Annex A AMS02-PDS Interface Control Drawing

4.1.1.2 REMOVABLE HANDLES

The removable handles (2+2)on the right and left edge of PDS chassis are used to handle the dismounted unit during ground operations.

The handles are for lifting only the unit, without the finned plate used during ground testing.

4.1.1.3 BOARDS (ESEMS)

The PDS modules are :

- ESEM1-A
- ESEM3-A
- ESEM3-B
- PB2
- CAN BUS I/F
- Input Stage

The overall dimensions of the module are:

width:	33 mm	
depth:	234 mm	(not including connector pins)
height:	142 mm	

The position of each board inside the PDS is depicted in the next picture.

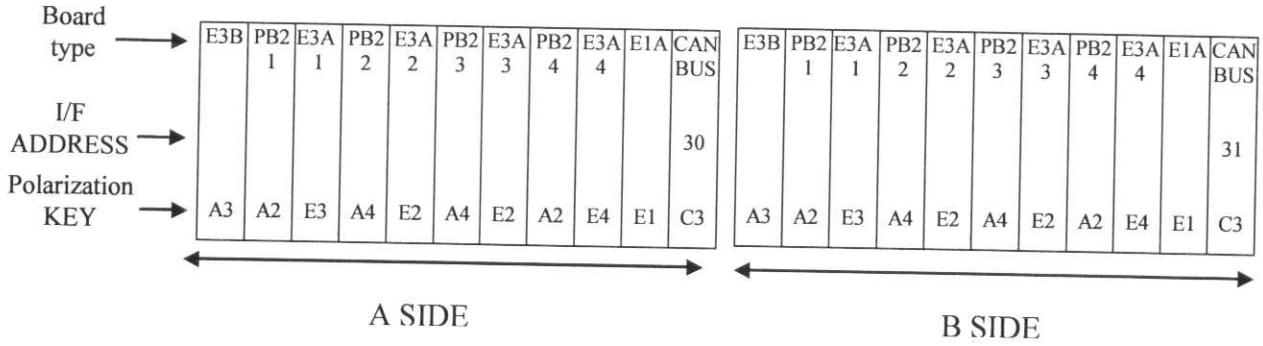

Fig. 4-13: Boards order (view from front panel)

Each board has a different connector polarization key, with some exceptions, in order to avoid any insertion on the wrong slot.
Due to some electrical characteristics (default status required) some of them can be exchanged.
The polarization key is showed in Fig. 4-13.
Input Stage boards will be allocated in the back side of the unit.

Questo documento contiene informazioni di proprietà di CARLO GAVAZZI SPACE SpA. Tutti i diritti sono riservati.
All information contained in this document are property of CARLO GAVAZZI SPACE SpA. All right reserved.

4.1.1.3.1 EXTRACTION AND INSERTION OF ESEMS

The insertion/extraction of the board is possible only during on ground integration/test.
The PDS assembled unit has a front cover screwed to the unit so the boards are not visible anymore.

4.1.1.3.2 LOCKING RETAINERS

The **locking retainers** of the ESEMs are EG&G Birtcher series 48-5 five-piece locking retainers. The expanding body is contained in a U-shaped guide and screwed to the frame. The locking retainer improves the thermal transfer from the ESEMs to the RPDA housing.

4.1.1.3.3 EXTRACTION AND INSERTION OF ESEMS

The board connectors are screwed to the PCB and mated to the correspondent connectors placed on the mother board; **alignment pins** provide the alignment between the connectors of the mother board and those on the PCB; the same pins, which have a polarization key, are used to preclude misplacement of the modules.

The procedure to insert the module is the following:

1. Ensure that the Wedge-locking retainers are un-expanded;
2. Insert the module in the slide guide until the centering pins are in the housing and the male connectors are in touch with the female ones;
3. push gently to reach a complete mating of the connectors;
4. Screw the two locking retainers to the indicated torque level
   - 1.0 Nm first utilisation
   - 0.8 Nm from second utilisation

The procedure to extract the module is the following:

1. Unlock the upper and lower locking retainer by means of seven (7) counter-clockwise turns of the fastener screws;
2. pull gently acting on the board bracket mechanic
3. Extract the module;

Questo documento contiene informazioni di proprietà di CARLO GAVAZZI SPACE SpA. Tutti i diritti sono riservati.
All information contained in this document are property of CARLO GAVAZZI SPACE SpA. All right reserved.

5. ELECTRICAL INTERFACES

There are 6 different types of boards defined for the PDS (see Fig. 5-1, Fig. 5-2 and Fig. 5-3 for the block diagrams and electrical architecture):

- ESEM1-A: Internal Power Supply
- ESEM3-A: 28V distribution board
- ESEM3-B: 120V distribution board
- PB2: 120V to 28V DCDC converter
- CAN BUS I/F: digital I/F board
- INPUT STAGE: EMI filter + in-rush limiter + thermal interlock + 120V PDS heaters supply

Questo documento contiene informazioni di proprietà di CARLO GAVAZZI SPACE SpA. Tutti i diritti sono riservati.
All information contained in this document are property of CARLO GAVAZZI SPACE SpA. All right reserved.

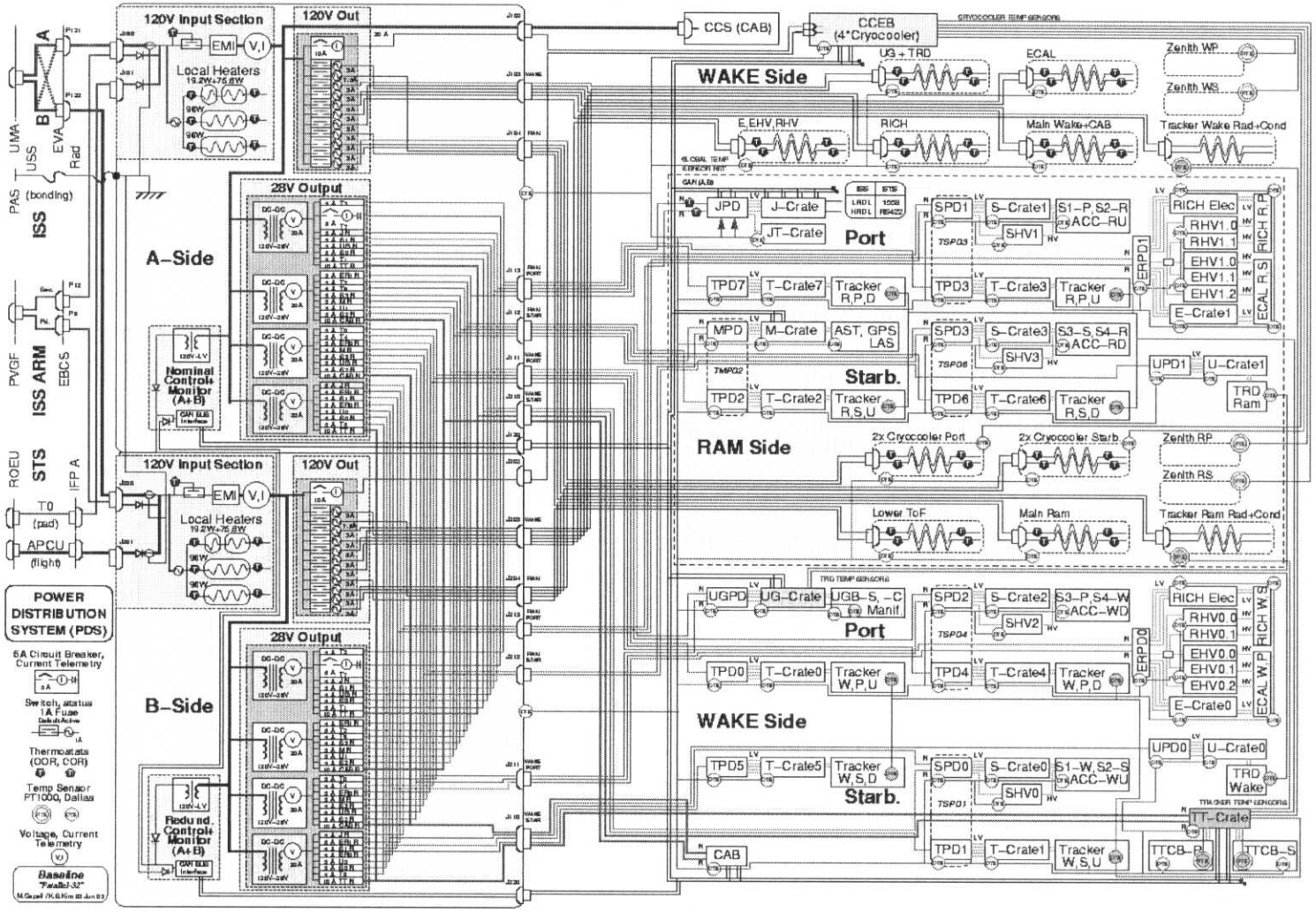

Fig. 5-1: PDS Vs AMS-02 Block Diagram

Questo documento contiene informazioni di proprietà di CARLO GAVAZZI SPACE SpA: Tutti i diritti sono riservati
All information contained in this document are property of CARLO GAVAZZI SPACE SpA. All right reserved.

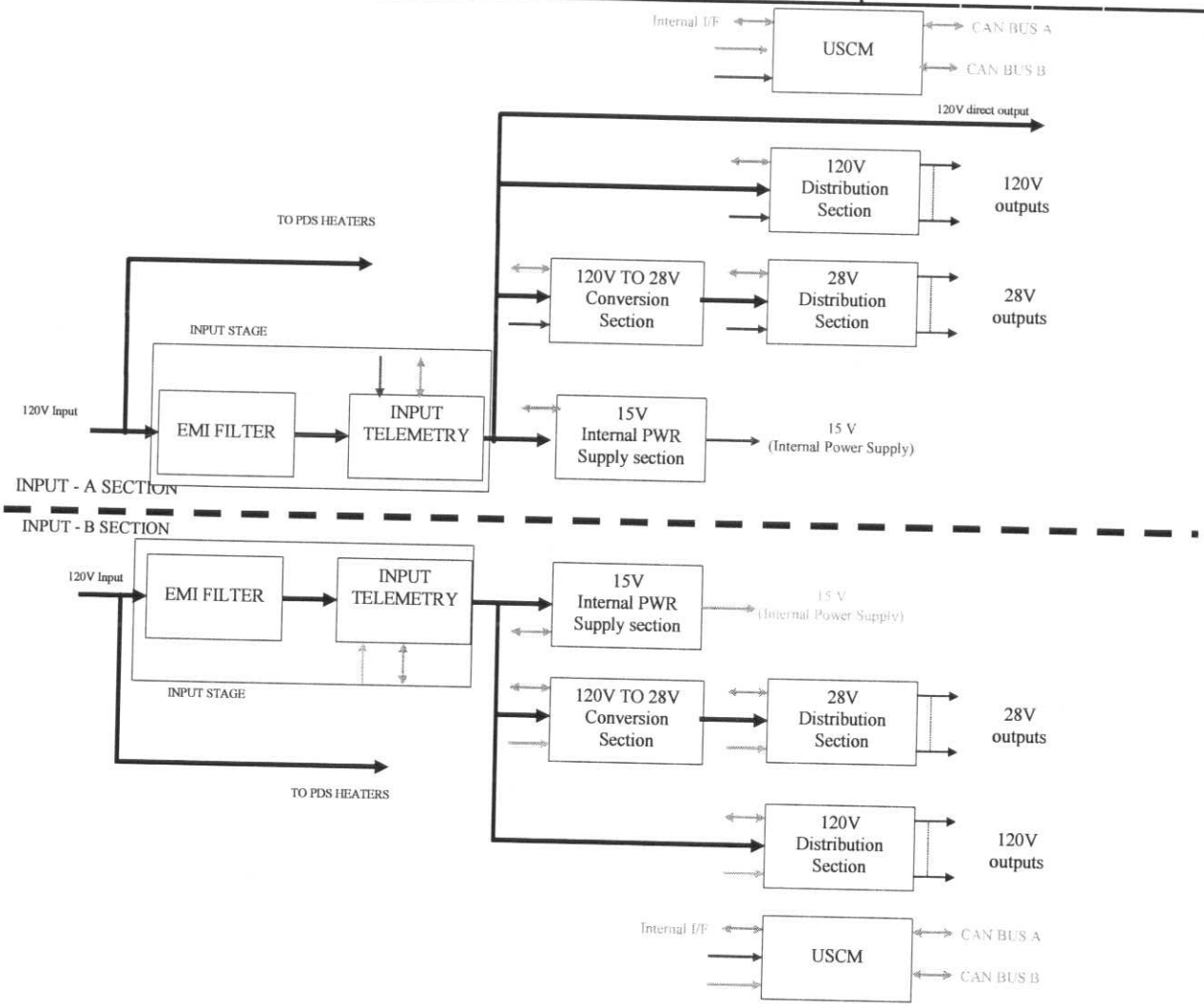

Fig. 5-2: PDS High Level Block Diagram

Questo documento contiene informazioni di proprietà di CARLO GAVAZZI SPACE SpA: Tutti i diritti sono riservati
All information contained in this document are property of CARLO GAVAZZI SPACE SpA. All right reserved.

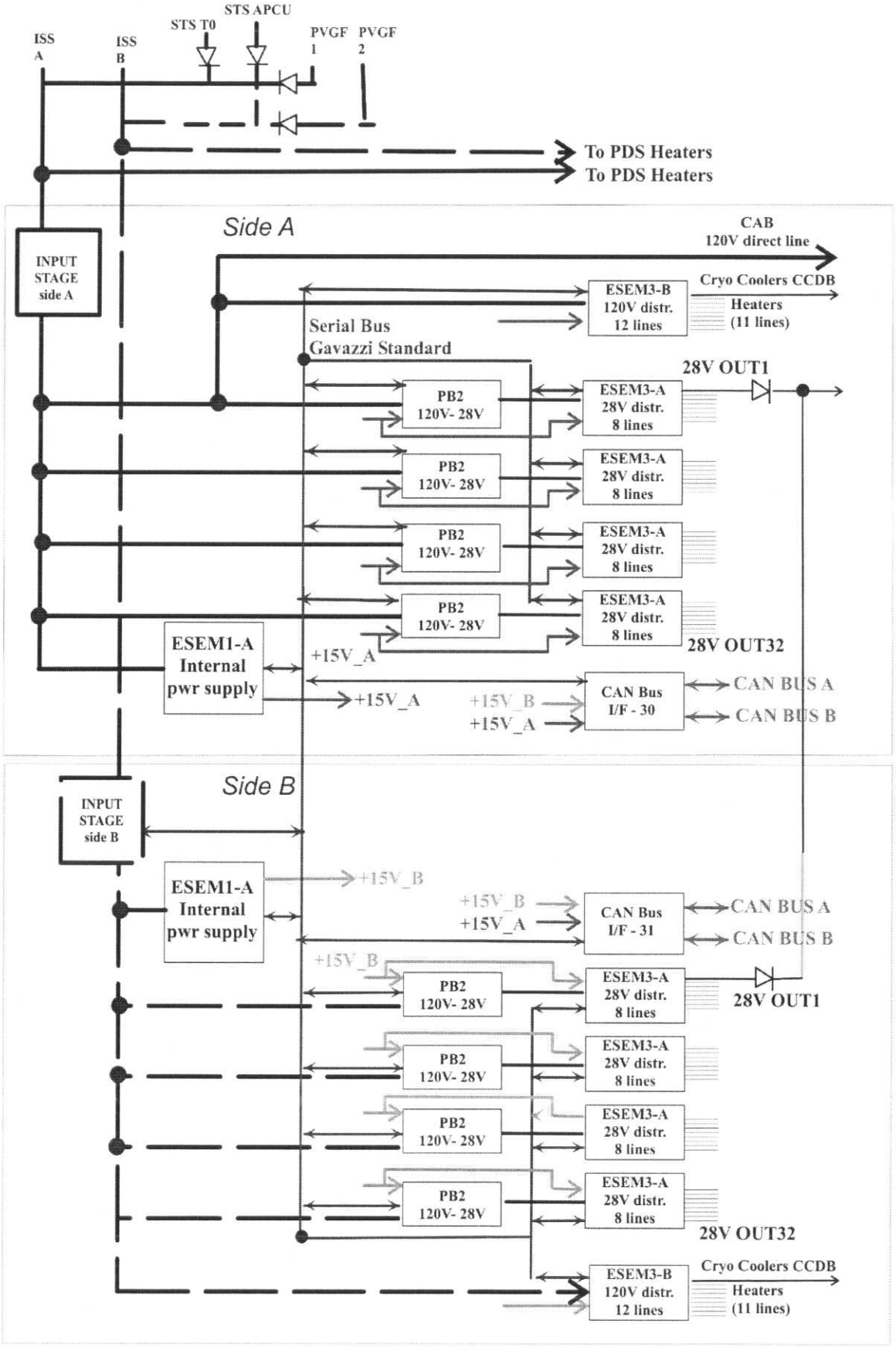

Fig. 5-3: PDS Electrical Architecture (ESEM boards)

Questo documento contiene informazioni di proprietà di CARLO GAVAZZI SPACE SpA. Tutti i diritti sono riservati.
All information contained in this document are property of CARLO GAVAZZI SPACE SpA. All right reserved.

PDS SIGNAL & POWER INTERFACES		
INPUT SECTION		
ISS	Power I/F input	120V Feeder A 120V Feeder B
STS	Power I/F input	120V Feeder APCU 120V Feeder T0
SSRMS (PVGF)	Power I/F input	120V Feeder PVGF 1 120V Feeder PVGF 2
EMI FILTER		EMI I/F
INPUT TELEMETRY		
INPUT TELEMETRY	Signal I/F	(Via internal serial I/F to the CAN BUS module) INPUT CURRENT INPUT VOLTAGE
INTERNAL POWER SUPPLY SECTION		
ESEM 1-A	Power I/F	15V Internal Power Supply
	Signal I/F	(Via internal serial I/F to the CAN BUS module) ON/OFF DC/DC CONVERTER DIGITAL Board Status Monitoring OK/NOK OVERTEMP DC/DC 1 OVERCURRENT DC/DC 2 OVERCURRENT DC/DC 1 MAIN ON/OFF DC/DC 2 MAIN ON/OFF MAIN POWER ON DIGITAL TEST OUT ANALOGUE Board Monitoring TEMPERATURE ANALOG REFERENCE VOLTAGE MAIN POWER VOLTAGE
120V OUTPUT SECTION		
DIRECT OUTPUT	Power I/F	120V Feeder to CCS in CAB
ESEM 3-B	Power I/F	OUT 1 for AMS heaters OUT 2 for AMS heaters OUT 3 for AMS heaters OUT 4 for AMS heaters OUT 5 for AMS heaters OUT 6 for AMS heaters OUT 7 for AMS heaters OUT 8 for AMS heaters OUT 9 for AMS heaters OUT 10 for AMS heaters OUT 11 for AMS heaters OUT 12 CCEB (Cryocoolers)

Questo documento contiene informazioni di proprietà di CARLO GAVAZZI SPACE SpA. Tutti i diritti sono riservati.
All information contained in this document are property of CARLO GAVAZZI SPACE SpA. All right reserved.

PDS SIGNAL & POWER INTERFACES		
	Signal I/F	(Via internal serial I/F to the CAN BUS module) ON/OFF OUTLET Command DIGITAL Board Status Monitoring OK/NOK OVERTEMP OUTLET STATUS (ON/OFF) OUTLET TRIP STATUS (only for CCEB line) ANALOGUE Board Monitoring TEMPERATURE OUTLET CURRENT (only for the CCEB line) ANALOG REFERENCE VOLTAGE
120V TO 28V CONVERSION SECTION		
PB2	Power I/F	28V OUTPUT to the ESEM 3-A distribution board
	Signal I/F	(Via internal serial I/F to the CAN BUS module) ON/OFF DC/DC CONVERTER Command DIGITAL Board Status Monitoring OK/NOK OVERTEMP DC/DC CONVERTER STATUS (ON/OFF) INPUT OVERCURRENT OUTPUT OVERVOLTAGE ANALOGUE Board Monitoring TEMPERATURE 28V OUTPUT VOLTAGE ANALOG REFERENCE VOLTAGE
ESEM 3-A	Power I/F	8 x 28V output lines out 1 to 7 @ 5A each out 8 @ 10A
	Signal I/F	(Via internal serial I/F to the CAN BUS module) ON/OFF OUTLET Command DIGITAL Board Status Monitoring OK/NOK OVERTEMP OUTLET STATUS (ON/OFF) OUTLET TRIP STATUS ANALOGUE Board Monitoring TEMPERATURE OUTLETS CURRENT ANALOG REFERENCE VOLTAGE
DIGITAL I/F SECTION		
CAN BUS I/F	Signal I/F	CAN BUS I/F PDS INTERNAL BUS I/F DIGITAL Command to the boards ANALOGUE ACQUISITIONS of the boards telemetry DIGITAL ACQUISITIONS of the boards status

Tab. 5-1: PDS Electrical Interfaces Description

Questo documento contiene informazioni di proprietà di CARLO GAVAZZI SPACE SpA. Tutti i diritti sono riservati.
All information contained in this document are property of CARLO GAVAZZI SPACE SpA. All right reserved.

5.1 INTERFACE DEFINITION

5.1.1 HARNESS INTERFACES

5.1.1.1 CONNECTOR LOCATION

The location and position, with respect to the rear wall dimensions, of connectors are shown on the mechanical drawings in the mechanical section of this document.

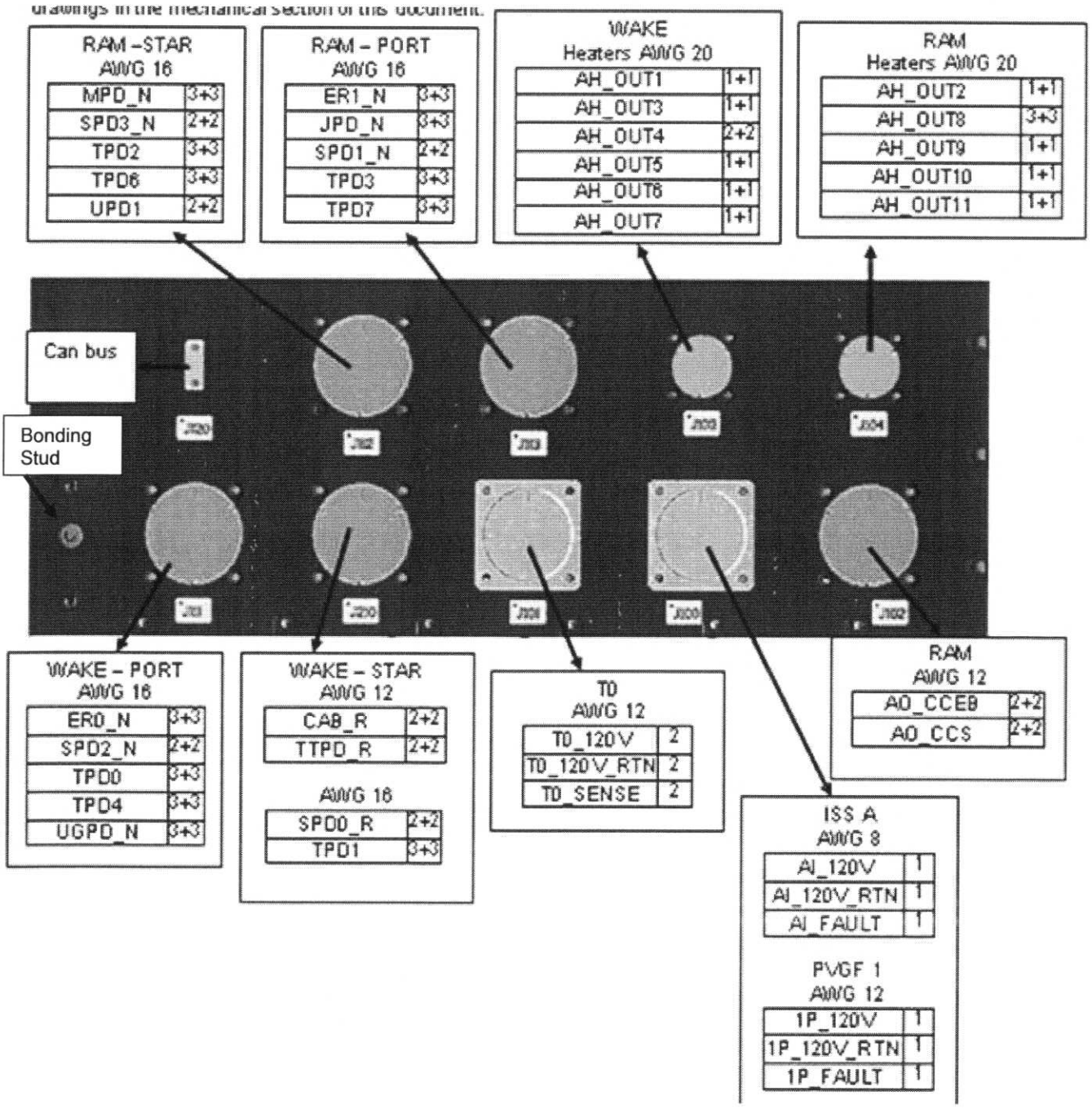

Fig. 5-4: side A output grouping (the number beside each line name will indicate the number of pins HOT&RETURN allocated for each line with the exception of the input connectors where each line is explicit)

Questo documento contiene informazioni di proprietà di CARLO GAVAZZI SPACE SpA. Tutti i diritti sono riservati.
All information contained in this document are property of CARLO GAVAZZI SPACE SpA. All right reserved.

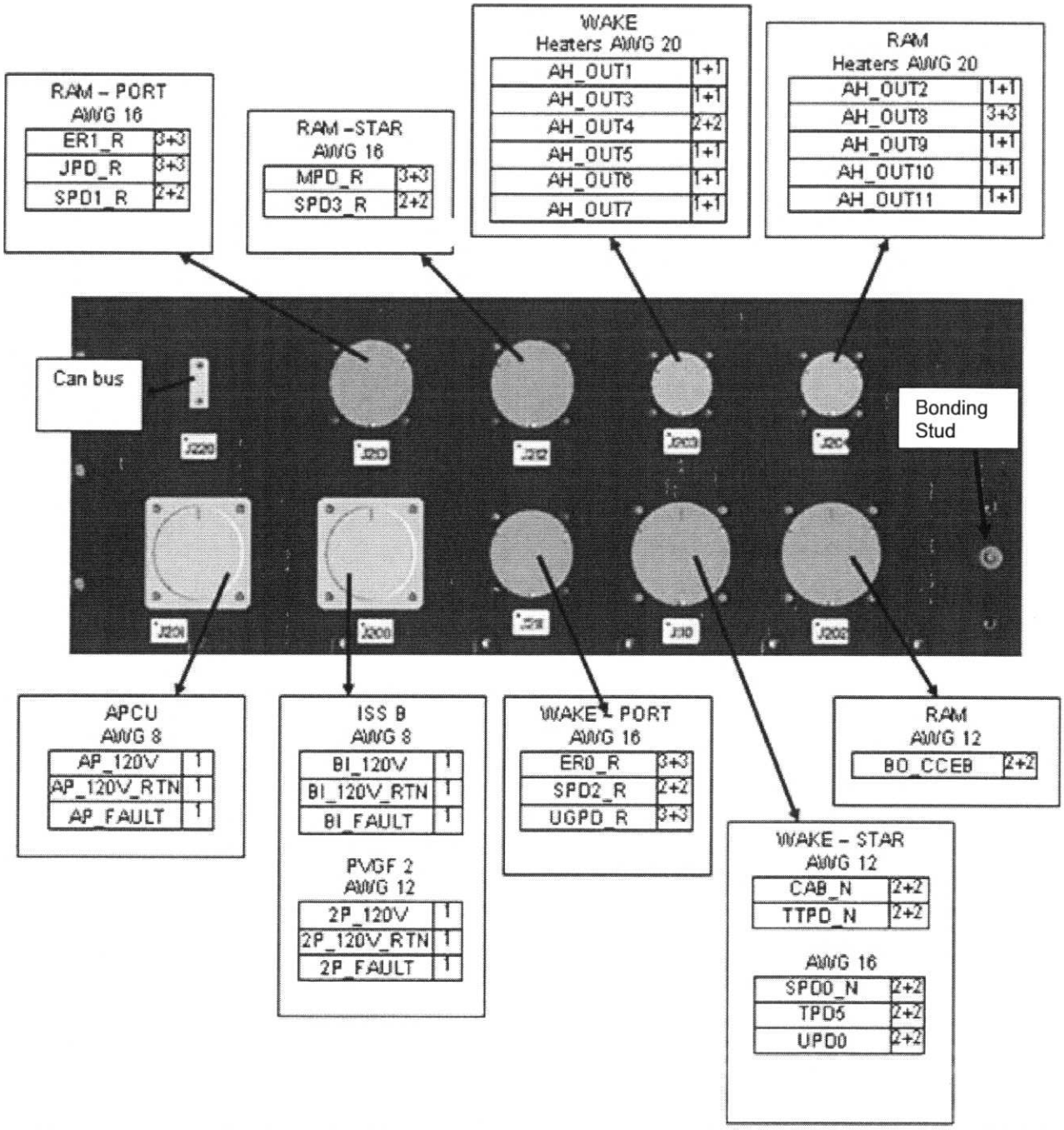

Fig. 5-5: side B output grouping (the number beside each line name will indicate the number of pins HOT&RETURN allocated for each line with the exception of the input connectors where each line is explicit)

Questo documento contiene informazioni di proprietà di CARLO GAVAZZI SPACE SpA. Tutti i diritti sono riservati.
All information contained in this document are property of CARLO GAVAZZI SPACE SpA. All right reserved.

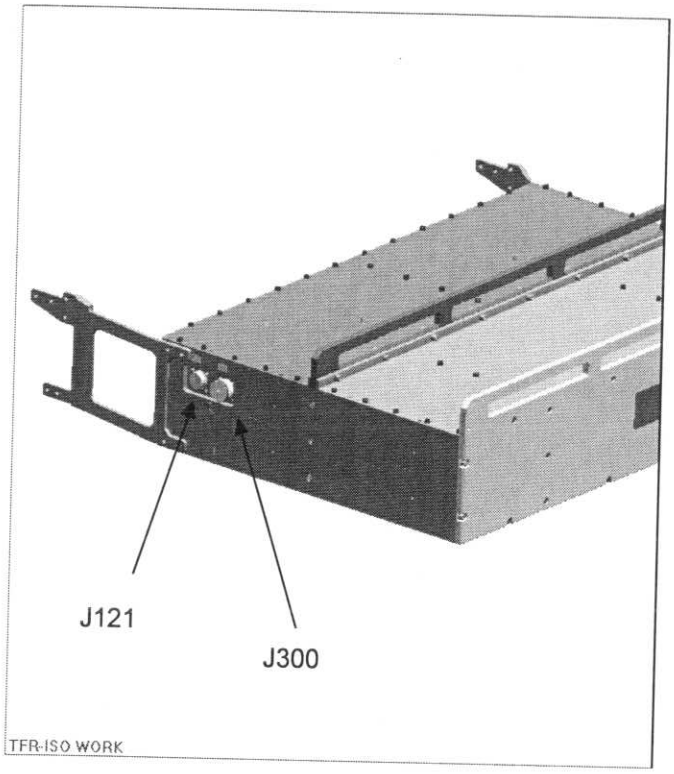

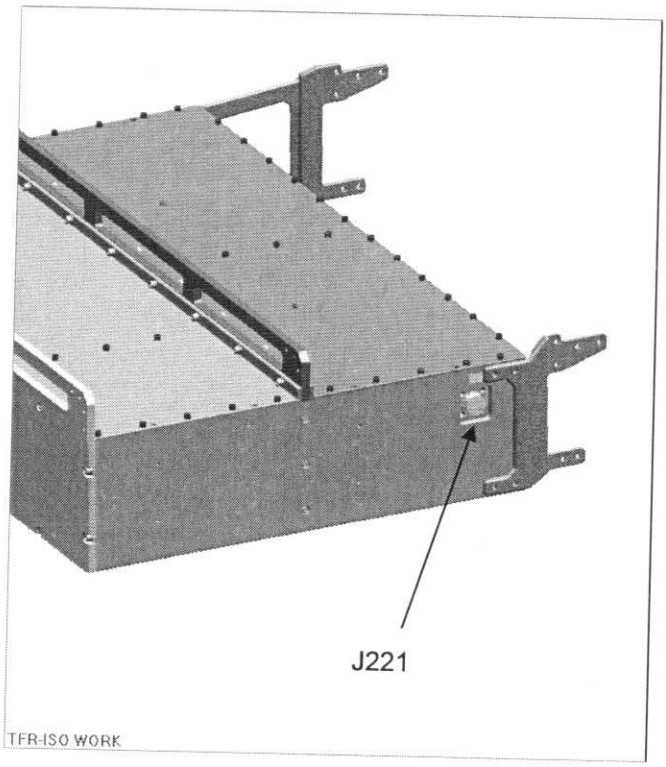

Fig. 5-6: J300, J121 and J221allocation

Questo documento contiene informazioni di proprietà di CARLO GAVAZZI SPACE SpA. Tutti i diritti sono riservati.
All information contained in this document are property of CARLO GAVAZZI SPACE SpA. All right reserved.

5.1.1.2 CONNECTORS LIST

The list of the PDS used connectors can be found in the table below.

Connector	FM part number
J100	MS3452L24-11P
J101	MS3452L24-11PW
J102	MS27508E24F24SA
J103	MS27508E14F18S
J104	MS27508E14F18SA
J110	MS27508E24F24S
J111	MS27508E24F29S
J112	MS27508E24F29SA
J113	MS27508E24F29SB
J120	M83513/03A16N
J121	MS27508E14F18SA
J200	MS3452L24-11P
J201	MS3452L24-11PW
J202	MS27508E24F24SA
J203	MS27508E14F18S
J204	MS27508E14F18SA
J210	MS27508E24F24S
J211	MS27508E20F16S
J212	MS27508E20F16SA
J213	MS27508E20F16SB
J220	M83513/03A16N
J221	MS27508E14F18SA
J300	MS27508E14F18S

Yellow	120V Input
Green	120V output
Blue	28V output
Pink	Control

Tab. 5-2: PDS connectors list

Questo documento contiene informazioni di proprietà di CARLO GAVAZZI SPACE SpA. Tutti i diritti sono riservati.
All information contained in this document are property of CARLO GAVAZZI SPACE SpA. All right reserved.