CARLO GAVAZZI

CARLO GAVAZZI SPACE SpA

ORIGINALE ARCHIVIO

AMS02-PDS

Tipo Doc.: *Doc.Type:*	PROCEDURE			N° DRD: *DRD N°:*	NA
N° Doc.: *Doc. N°:*	**PDS-PR-CGS-011**	Ediz.: *Issue:* **1**	Data: *Date:* **12/09/2008**	Pagina *Page* **1**	Di *Of* **51**
Titolo : *Title :*	PDS PFM UNIT – MECHANICAL INTEGRATION PROCEDURE				

	Nome & Funzione *Name & Function*	Firma *Signature*	Data *Date*
Preparato da: *Prepared by:*	Ruzza P. (DT/MT) Assenza A. (DT/MT)		12-09-08 12-09.08
Approvato da: *Approved by:*	Cinquepalmi C. (PA/CC) Alia S. (DT/EE) Francini E. (PA/QA) Molina M. (DT/MT) Dell'Acqua A. (DT/OP)		22.09.08 12-9-08 22/09/08 15-9-2008 18-09-2008
Applicazione autorizzata da: *Application authorized by:*	Olivier M. (PM)		12/09/08

Customer / Higher Level Contractor

Accettato da: *Accepted by:*			
Approvato da: *Approved by:*			

LISTA DI DISTRIBUZIONE *DISTRIBUTION LIST*	N	A	I
Interna / *Internal*			
Dell'Acqua A. (DT/OP)	1	X	
Alia S. (DT/EE)	1	X	
Olivier M. (PM)			X
Esterna / *External*			
N.A.			

N=Numero di copie A=Applicazione I=Informazione
N=Number of copy A=Application I=Information

Gestione documenti: *Data Management:* Firma / *Signature* Data / *Date* 22/09/08

File: PDS-PR-CGS-011_issue1.doc

Questo documento contiene informazioni di proprietà di CARLO GAVAZZI SPACE SpA: Tutti i diritti sono riservati
All information contained in this document are property of CARLO GAVAZZI SPACE SpA. All right reserved.

REGISTRAZIONE DELLE MODIFICHE / *CHANGE RECORD*

EDIZIONE *ISSUE*	DATA *DATE*	AUTORIZZAZIONE *CHANGE AUTHORITY*	OGGETTO DELLA MODIFICA E SEZIONI AFFETTE *REASON FOR CHANGE AND AFFECTED SECTIONS*
1	12/09/2008		

Questo documento contiene informazioni di proprietà di CARLO GAVAZZI SPACE SpA. Tutti i diritti sono riservati.
All information contained in this document are property of CARLO GAVAZZI SPACE SpA. All right reserved.

LISTA DELLE PAGINE VALIDE / *LIST OF VALID PAGES*

PAGINA *PAGE*	EDIZIONE *ISSUE*	PAGINA *PAGE*	EDIZIONE *ISSUE*	PAGINA *PAGE*	EDIZIONE *ISSUE*	PAGINA *PAGE*	EDIZIONE *ISSUE*	PAGINA *PAGE*	EDIZIONE *ISSUE*
1 - 51	1								

Questo documento contiene informazioni di proprietà di CARLO GAVAZZI SPACE SpA. Tutti i diritti sono riservati.
All information contained in this document are property of CARLO GAVAZZI SPACE SpA. All right reserved.

TABLE OF CONTENT

1. SCOPE 6

2. APPLICABLE AND REFERENCE DOCUMENTS 6

3. ACRONYMS LIST 7

4. COMMON INSTRUCTIONS 8

4.1 RUNNING TORQUE MEASUREMENT 8
4.2 FINAL INSTALLATION TORQUE MEASUREMENT 9
4.3 PA REQUIREMENTS 9

5. PRE-INTEGRATION ACTIVITIES 10

5.1 CHO-THERM INTEGRATION ON BASEPLATE AND TOP COVER FRONT 10
5.2 THERMAL HARDWARE INTEGRATION ON MIDWALLs FRONT 11

6. INTEGRATION PROCEDURE 12

6.1 STEP1 13
6.2 STEP2 19
6.3 STEP3 23
6.4 STEP4 26

7. TEST PROCEDURE VARIATION SHEET 30

8. SILVER TEFLON TAPE APPLICATION PROCEDURE INTRODUCTION 32

8.1 TAPE ARTICLE 32
8.2 TAPE CONFIGURATION 32
8.3 STEP BY STEP PROCEDURE 33

ANNEX 1. – SCREW TORQUE LOG SHEET 35

Questo documento contiene informazioni di proprietà di CARLO GAVAZZI SPACE SpA. Tutti i diritti sono riservati.
All information contained in this document are property of CARLO GAVAZZI SPACE SpA. All right reserved.

LIST OF FIGURES

Fig 5-1 - CHO-THERM integration on baseplate 10
Fig 5-2 - CHO-THERM installation on top cover front 10
Fig 5-3 – MIDWALL FRONT left (detail X) and right (detail Y) 11
Fig 6-1 - Motherboard frame 15
Fig 6-2 - Midwall rear 1 16
Fig 6-3 - Midwall front left 16
Fig 6-4 - Midwall front right 17
Fig 6-5 - PDS support - left and right 17
Fig 6-6 – PDS BONDING Bar Spacer 18
Fig 6-7 - Right panel 18
Fig 6-8 - left panel 18
Fig 6-9 – Stiffener left and right 21
Fig 6-10 - connecting spacer 1 and 2 21
Fig 6-11 - Baseplate - connection for input stages holes 22
Fig 6-12 – baseplate : holes i/f with rear panel 25
Fig 6-13 - Midwall Rear 2 25
Fig 6-14 - Motherboard frame - connection to top covers 25
Fig 6-15 - Rear panel : holes i/f with Top cover Rear 28
Fig 6-16 – baseplate : holes i/f with front panel 28
Fig 6-17 - Top cover front 29
Fig 8-1 - Tape application area on PDS 32
Fig 8-2 - Detail of stay-out zones 33

LIST OF TABLES

Tab 2-1 - Applicable Documents 6
Tab 2-2 - Reference Documents 6
Tab 4-1 Running torque measurement step by step procedure 8
Tab 4-2 - List of admitted Torque Wrenches 9

Questo documento contiene informazioni di proprietà di CARLO GAVAZZI SPACE SpA. Tutti i diritti sono riservati.
All information contained in this document are property of CARLO GAVAZZI SPACE SpA. All right reserved.

1. SCOPE

Scope of this document is to provide information and guidelines for mechanical integration of AMS02 PDS PFM Unit, p/n 10-AMS02PDS-000.00 s/n:FM01.
This document shall be used in association with AMS02-PDS AMS02 Power Distribution System Assembly Drawing [AD2] and related part list [AD3].
Chapter 6 of this document provide the step-by step Assembly plan in form of Task sheets which describe each assembly sequence in detail and require all intermediate assembly inspections, measurements, also.
On Chapter **8** is depicted the procedure for Thermal Hardware (Silver Tape) application.

Annex 1 of this document contains the screw torque log sheet and it will used for **final INTEGRATION REPORT DOCUMENT**

2. APPLICABLE AND REFERENCE DOCUMENTS

AD #	Doc Number	Issue	Date	Rev	Title
1	**AMSCD-PL-CGS-001**	1	04/02/2008		AMS02 PA Plan
2	**10-AMS02PDS-000.00**		28.07.08	/	AMS02-PDS AMS02 POWER DISTRIBUTION SYSTEM ASSEMBLY
3	**10-AMS02PDS-000.01**		28.07.08	/	AMS02-PDS AMS02 POWER DISTRIBUTION SYSTEM ASSEMBLY PART LIST
4	**PDS-TN-CGS-010**	1	25/03/2008		PDS FM Structural analysis
5	**10-AMS02PDS-000.26**		15/07/2008	/	AMS02-PDS PB2 slots THERMAL FILLER
6	**11-AMS02PDS-900.00**		01/08/2008	/	AMS02-PDS internal cabling
7	**10-AMS02PDS-000.11**		16/01/2008	/	AMS02-PDS top cover rear

Tab 2-1 - Applicable Documents

RD #	Doc Number	Issue	Date	Rev	Title
1	**AMSTCS-TN-CGS-004**	1	31/03/2008		Main and tracker radiator thermal analysis report

Tab 2-2 - Reference Documents

Questo documento contiene informazioni di proprietà di CARLO GAVAZZI SPACE SpA. Tutti i diritti sono riservati.
All information contained in this document are property of CARLO GAVAZZI SPACE SpA. All right reserved.

3. ACRONYMS LIST

ATP	Authorization To Proceed
BC	Back Cover
BP	Back Panel
CAD	Computer Aided Design
CGS	Carlo Gavazzi Space
EGSE	Electrical Ground Support Equipment
EM	Engineering Model
ESD	Electro Static Discharge
FFMAR	Final Flight Model Acceptance Review
FM	Flight Model
GSE	Ground Support Equipment
GMM	Geometrical Mathematical Model
HW	Hardware
ICD	Interface Control Document
I/F	Interface
ISS	International Space Station
NA	Not Applicable
NASA	National Aeronautics and Space Administration
NCR	Non Conformance Report
NSTS	National Space Transportation System (Shuttle)
PA	Product Assurance
PB2	Power Board 2
PCB	Printed Circuit Board
PDS	Power Distribution System
PFM	Proto Flight Model
PSA	Pressure sensitive adhesive
QM	Qualification Model
STS	Space Transportation System (Shuttle)
SW	Software
TBC	To Be Confirmed
TBD	To Be Defined
TRR	Test Readiness Review
TMM	Thermal Mathematical Model

Questo documento contiene informazioni di proprietà di CARLO GAVAZZI SPACE SpA. Tutti i diritti sono riservati.
All information contained in this document are property of CARLO GAVAZZI SPACE SpA. All right reserved.

4. COMMON INSTRUCTIONS

All integration procedure shall be performed in environmentally and cleanliness controlled conditions:

Class 100.000 cleanliness environment;
Relative humidity: 60% max;
Temperature: 15°C to 25°C;

Traceability of running and final torque must be taken on screw torque log sheet and should be included on dedicated PDS PFM integration report .

4.1 RUNNING TORQUE MEASUREMENT

Running torque is the torque applied on bolts while they are turning and passing through the Heli-coil. Since it is a continuous torque it has to be measured with a analogical torque wrench, obtaining the maximum torque applied during this operation.

All the running torque measurement must be indicated in the tables in annex 1 of this document.

If the read value is outside the limits of table in annex 1, stop the integration and open an NCR with reference to the affected Helicoil.

Each operation on PFM Hardware shall be done wearing gloves.
The Step by Step procedure of Tab 4-1 is to be performed for each Bolt.

STEP	Operation
1	Clean the bolt in a isopropyl alcohol bath
2	Let the bolt dry on a clean towel
3	Perform visual inspection of the bolt
4	Observe the calibration status of measuring and safety relevant equipment. If recalibration is necessary do not proceed until the tool is ready to be used.
5	Record type and calibration data of tools and devices
6	Measuring running torque screwing the bolt passing through the Heli-coil and register the measured torque on dedicated log sheet in annex 1
7	Calculate final torque of each bolt as described on paragraph 4.2
8	**At final integration** Put all the prepared bolts and screw them until the head of each bolt reaches the leaning surface.
9	Torque all the bolts as indicated on paragraph 4.2 for final installation and register the measurement in dedicated log sheet on annex 1 .

Tab 4-1 Running torque measurement step by step procedure

Questo documento contiene informazioni di proprietà di CARLO GAVAZZI SPACE SpA. Tutti i diritti sono riservati.
All information contained in this document are property of CARLO GAVAZZI SPACE SpA. All right reserved.

4.2 FINAL INSTALLATION TORQUE MEASUREMENT

Final Torque to be applied to each bolt is the result of the sum of the Running Torque measured on that bolt and the Seating Torque prescribed from the structural analysis [AD4].
The aforementioned torques are to be used when no Special Tools are used on the torque wrench to reach the bolts.
Vertical rigid extensions are not considered special tools, as far as they are not very flexible in torsion.
Cardan joint (universal joint) can be used but only with an angle between braces lower than 20 degrees.
Hereafter there is the list of Torque Wrenches admitted for PDS Integration,
The Torque Wrenches used on each bolt has to be traced on Dedicated Log Sheet in the Remarks.

P/N	Range	Brace ref.	Calibrated until [date]	Utilization
CL-90	0-4Nm	185mm		Running Torque Measurement
CL-92	0-3,5Nm	N.A.		Running Torque Measurement
CB-30	0-27Nm	185mm		Final Torque Measurement
CT-3	4-20Nm	160mm		Final Torque Measurement
2003/377477	4-20Nm	1660mm		Final Torque Measurement
CL-95	12-62cNm	N.A.		Torque of connectors screws

Tab 4-2 - List of admitted Torque Wrenches

4.3 PA REQUIREMENTS

Each action performed during integration activity shall be done in presence of PA personnel and registered in the proper historical record document.
Inspection Report on Running Torque, Final installation Torque and electrical measurements shall be PA certified.

Questo documento contiene informazioni di proprietà di CARLO GAVAZZI SPACE SpA. Tutti i diritti sono riservati.
All information contained in this document are property of CARLO GAVAZZI SPACE SpA. All right reserved.

5. PRE-INTEGRATION ACTIVITIES

5.1 CHO-THERM INTEGRATION ON BASEPLATE AND TOP COVER FRONT

For thermal reasons a thermal filler (Cho-Therm 1671 with PSA) shall be installed in the PB2 slots of the PDS baseplate and top cover front.

Action	Description	Check/ date	PA	Remarks
5.1.1	Cut Cho-Therm 1671 with PSA according to drawing p/n 10-AMS02PDS-000.26 [AD5]			
5.1.2	Install Cho-Therm 1671 with PSA on Baseplate P/N 10-AMS02PDS-000.04, only on the frames indicated on sheet 8 of 10 of assembly drawing [AD2] (PB2 slots)			
5.1.3	Install Cho-Therm 1671 PSA on top cover front P/N 10-AMS02PDS-000.10, only on the frames indicated on sheet 8 of 10 of assembly drawing [AD2] (PB2 slots)			

For completeness the drawing showing the position of CHO-THERM in the baseplate and on top cover front are reported below:

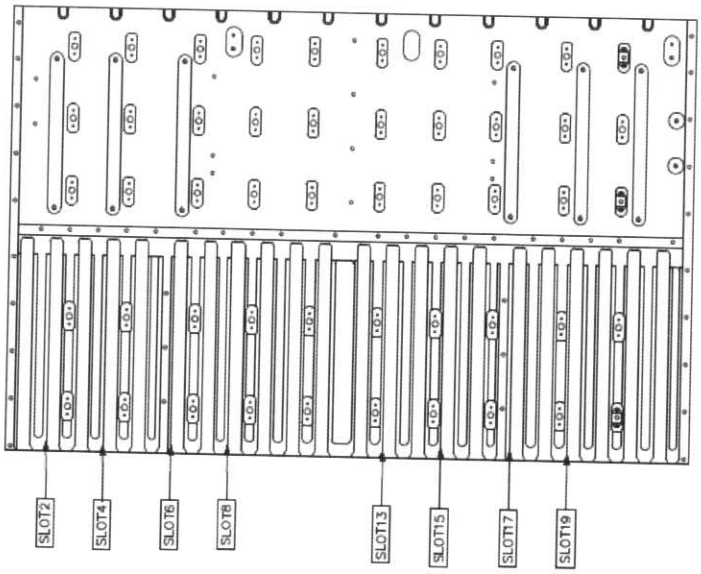

Fig 5-1 - CHO-THERM integration on baseplate

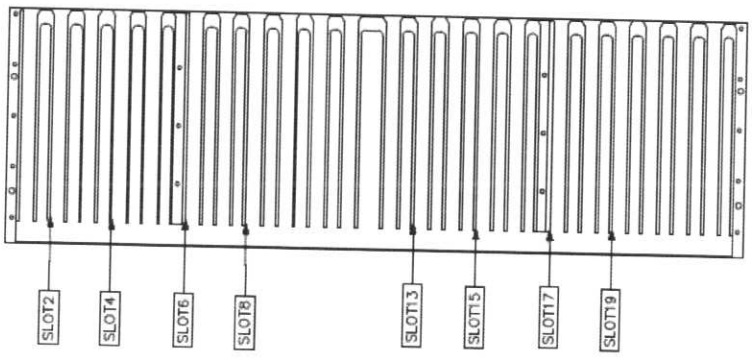

Fig 5-2 - CHO-THERM installation on top cover front

Questo documento contiene informazioni di proprietà di CARLO GAVAZZI SPACE SpA. Tutti i diritti sono riservati.
All information contained in this document are property of CARLO GAVAZZI SPACE SpA. All right reserved.

5.2 THERMAL HARDWARE INTEGRATION ON MIDWALLs FRONT

Thermostats and termistors shall be fixed on both midwalls acc. [AD2] and internal cabling document [AD6]

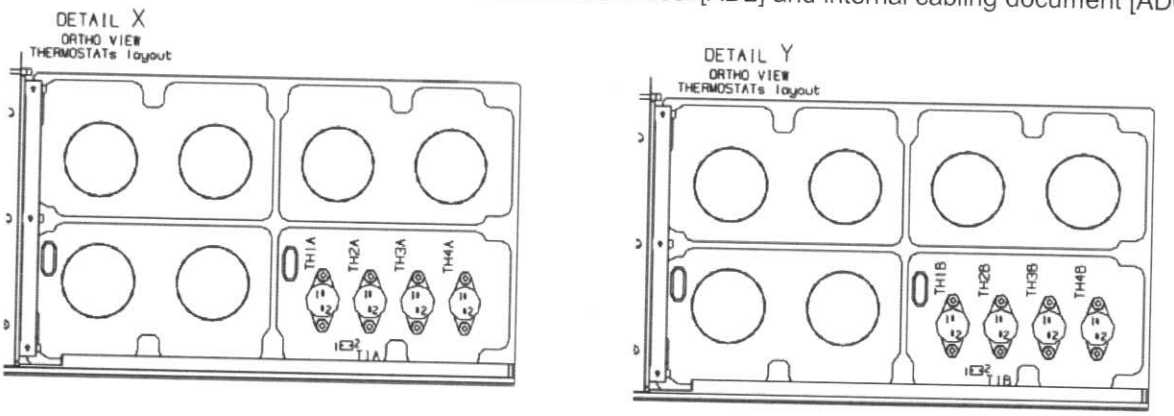

Fig 5-3 – MIDWALL FRONT left (detail X) and right (detail Y)

Action	Description	Check / date	PA	Remarks
5.2.1	fix thermostats and thermistors on MIDWALL FRONT left acc. to assembly drawing [AD2] sheet2			
5.2.2	fix thermostats and thermistors on MIDWALL FRONT right acc. to assembly drawing [AD2] sheet2			
5.2.3	Connect all wires acc. to internal cabling document [AD6]			

Questo documento contiene informazioni di proprietà di CARLO GAVAZZI SPACE SpA. Tutti i diritti sono riservati.
All information contained in this document are property of CARLO GAVAZZI SPACE SpA. All right reserved.

6. INTEGRATION PROCEDURE

Unless otherwise specified in this document, the integration sequence is defined on assembly drawings [AD2] .
Each action of running torque measurement shall be done according to common instructions chapter.
For position of all item please refer to [AD2] and [AD3].
Each deviation from this integration sequence must be reported in the annexed Procedure Variation sheet.
The integration steps are put into chronological order, according to strategies, risks, and other marginal conditions.

Questo documento contiene informazioni di proprietà di CARLO GAVAZZI SPACE SpA. Tutti i diritti sono riservati.
All information contained in this document are property of CARLO GAVAZZI SPACE SpA. All right reserved.

6.1 STEP1

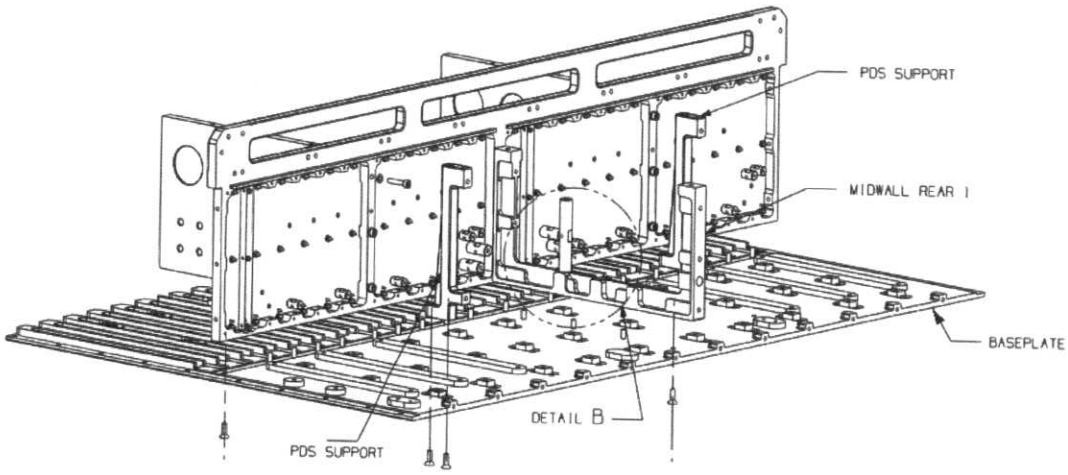

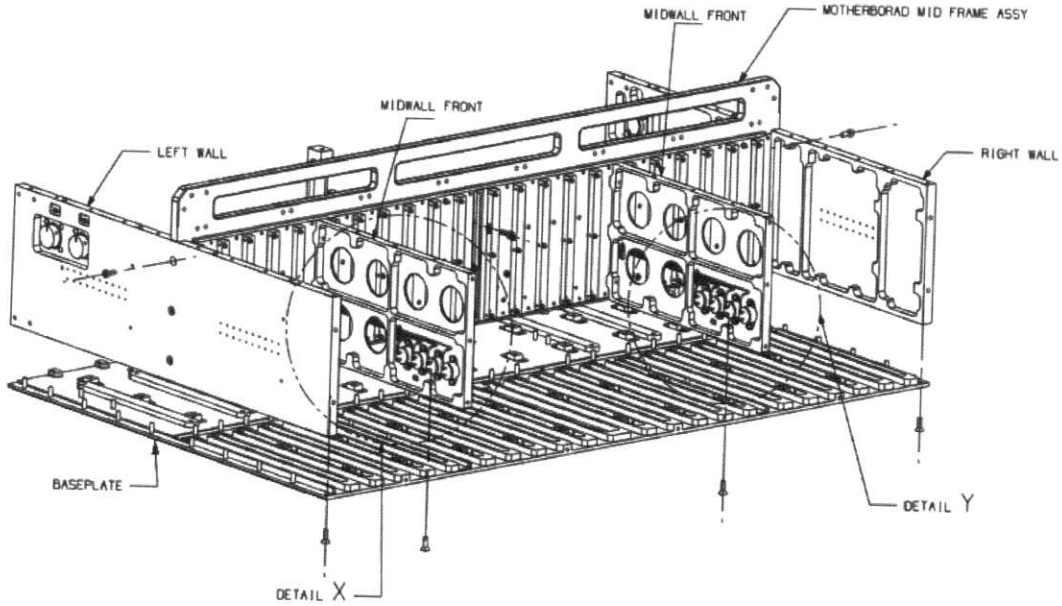

action	Description	Check date	PA	Remarks
6.1.1	On **Motherboard mid frame assembly** Perform Running Torque measurement on the holes marked as MB1 and MB20 (see *Fig 6-1*) and identify each bolt with the corresponded MB1 and MB20. Report Running torque			
6.1.2	On **Motherboard mid frame assembly** Perform Running Torque measurement on the holes marked as MB21 and MB26 (see *Fig 6-1*)and identify each bolt with the corresponded MBXX . Report Running torque			
6.1.3	On **Motherboard mid frame assembly** Perform Running Torque measurement on the holes marked as MB27 and MB28 (see *Fig 6-1*) and identify each bolt with the corresponded MBXX. Report Running torque			

Questo documento contiene informazioni di proprietà di CARLO GAVAZZI SPACE SpA. Tutti i diritti sono riservati.
All information contained in this document are property of CARLO GAVAZZI SPACE SpA. All right reserved.

6.1.4	Fix **Motherboard mid frame assembly** on ***baseplate*** and record final tightening torque for MB1 and MB20 correspondent bolts			
6.1.5	Perform Running Torque measurement on the **Midwall rear 1** holes marked as MW1 to MW12 (seeFig 6-2) and identify each bolt with the corresponded MWXX. Report Running torque			
6.1.6	Fix **Midwall rear 1** with the ***baseplate*** and record final tightening torque for MW1 to MW4 correspondent bolts			
6.1.7	Fix **Midwall rear 1** with the ***Motherboard mid frame assembly*** and record final tightening torque for MW5 to MW7 correspondent bolts			
6.1.8	Perform Running Torque measurement on the **Midwall front left** holes marked as MWL1 to MWL12 (see Fig 6-3) and identify each bolt with the corresponded MWLXX. Report Running torque			
6.1.9	Perform Running Torque measurement on the **Midwall front right** holes marked as MWR1 to MWR12 (see *Fig 6-4*) and identify each bolt with the corresponded MWRXX. Report Running torque			
6.1.10	Fix **Midwall front left** with the ***baseplate*** and record final tightening torque for MWL4 to MWL6 correspondent bolts			
6.1.11	Fix **Midwall front left** with the ***Motherboard mid frame assembly*** and record final tightening torque for MWL7 to MWL9 correspondent bolts			
6.1.12	Fix **Midwall front right** with the ***baseplate*** and record final tightening torque for MWR4 to MWR6 correspondent bolts			
6.1.13	Fix **Midwall front right** with the ***Motherboard mid frame assembly*** and record final tightening torque for MWR7 to MWR9 correspondent bolts			
6.1.14	Perform Running Torque measurement on the **PDS support left** holes marked as SPL1 to SPL5 (see Fig 6-5) and identify each bolt with the corresponded SPLXX. Report Running torque			
6.1.15	Perform Running Torque measurement on the **PDS support right** holes marked as SPR1 to SPR5 (see Fig 6-5) and identify each bolt with the corresponded SPRXX. Report Running torque			
6.1.16	Fix **PDS support left** with the ***baseplate*** and record final tightening torque for SPL1 and SPL2 correspondent bolts			
6.1.17	Fix **PDS support right** with the ***baseplate*** and record final tightening torque for SPR1 and SPR2 correspondent bolts			
6.1.18	Perform Running Torque measurement on the **PDS Bonding Bar Spacer** hole marked as BS1 (see Fig 6-6). Report Running torque			
6.1.19	Fix **PDS Bonding Bar Spacer** with the ***baseplate, and Midwall Rear1*** and record final tightening torque for BS1 correspondent bolt			
6.1.20	Perform Running Torque measurement on the **PDS right panel** holes marked as RP1 and RP25 (see Fig 6-10). Report Running torque			

Questo documento contiene informazioni di proprietà di CARLO GAVAZZI SPACE SpA. Tutti i diritti sono riservati.
All information contained in this document are property of CARLO GAVAZZI SPACE SpA. All right reserved.

6.1.21	Fix **PDS right panel** with the ***baseplate,*** and record final tightening torque for RP11 to RP20 correspondent bolts			
6.1.22	Fix **PDS right panel** with the ***motherboard mid frame,*** and record final tightening torque for MB21 to MB23 correspondent bolts			
6.1.23	Perform Running Torque measurement on the **PDS left panel** holes marked as LP1 and LP25 (see Fig 6-8). Report Running torque			
6.1.24	Fix **PDS left panel** with the ***baseplate,*** and record final tightening torque for LP1 to LP10 correspondent bolts			
6.1.25	Fix **PDS left panel** with the ***motherboard mid frame,*** and record final tightening torque for MB24 to MB26 correspondent bolts			

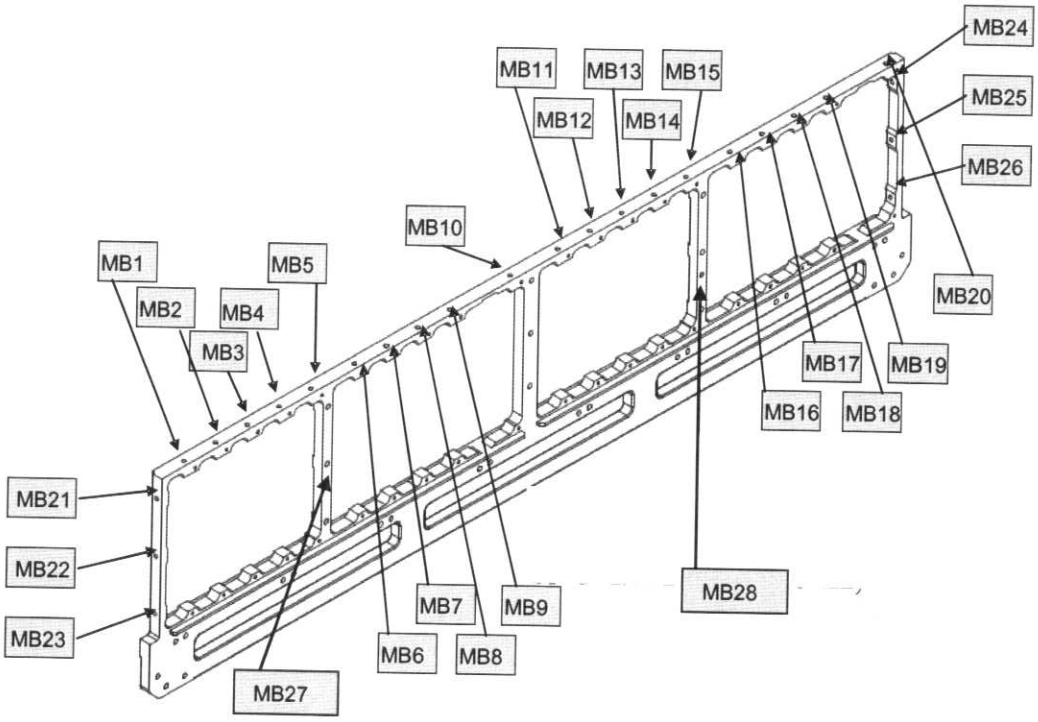

Fig 6-1 - Motherboard frame

Questo documento contiene informazioni di proprietà di CARLO GAVAZZI SPACE SpA. Tutti i diritti sono riservati.
All information contained in this document are property of CARLO GAVAZZI SPACE SpA. All right reserved.

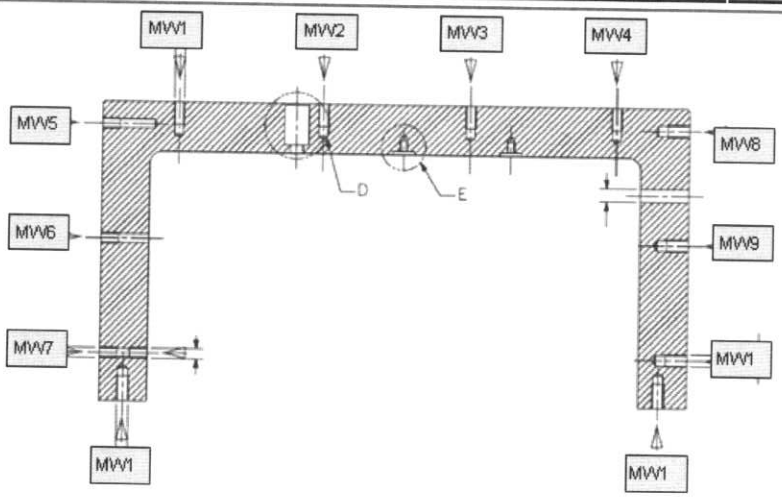

Fig 6-2 - Midwall rear 1

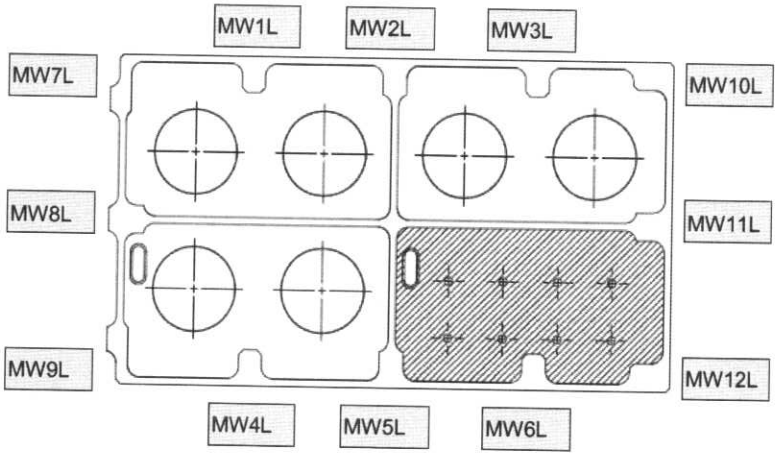

Fig 6-3 - Midwall front left

Questo documento contiene informazioni di proprietà di CARLO GAVAZZI SPACE SpA. Tutti i diritti sono riservati.
All information contained in this document are property of CARLO GAVAZZI SPACE SpA. All right reserved.

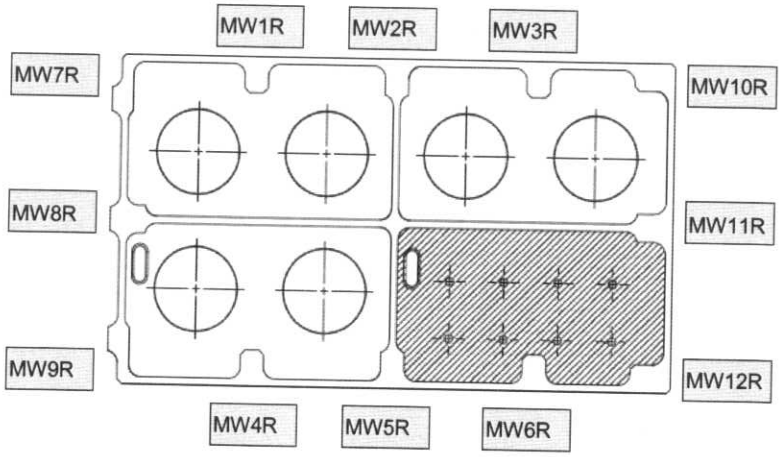

Fig 6-4 - Midwall front right

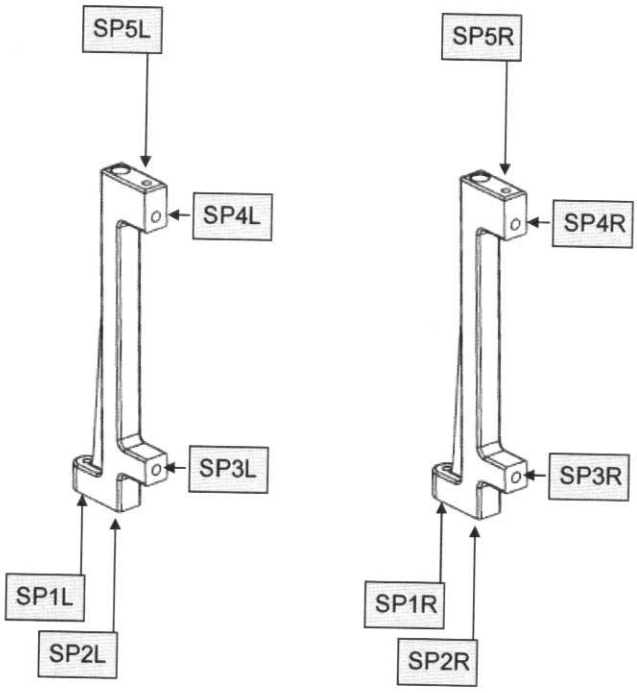

Fig 6-5 - PDS support - left and right

Questo documento contiene informazioni di proprietà di CARLO GAVAZZI SPACE SpA. Tutti i diritti sono riservati.
All information contained in this document are property of CARLO GAVAZZI SPACE SpA. All right reserved.

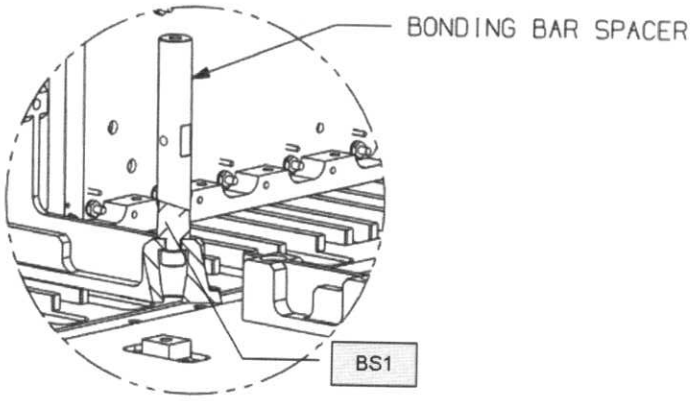

Fig 6-6 – PDS BONDING Bar Spacer

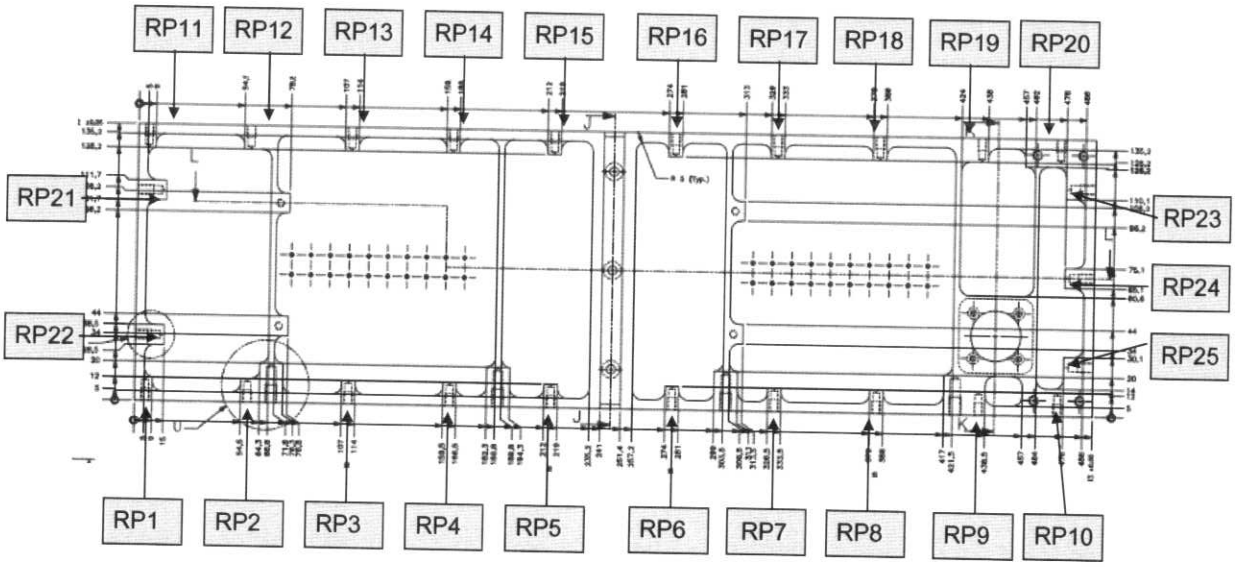

Fig 6-7 - Right panel

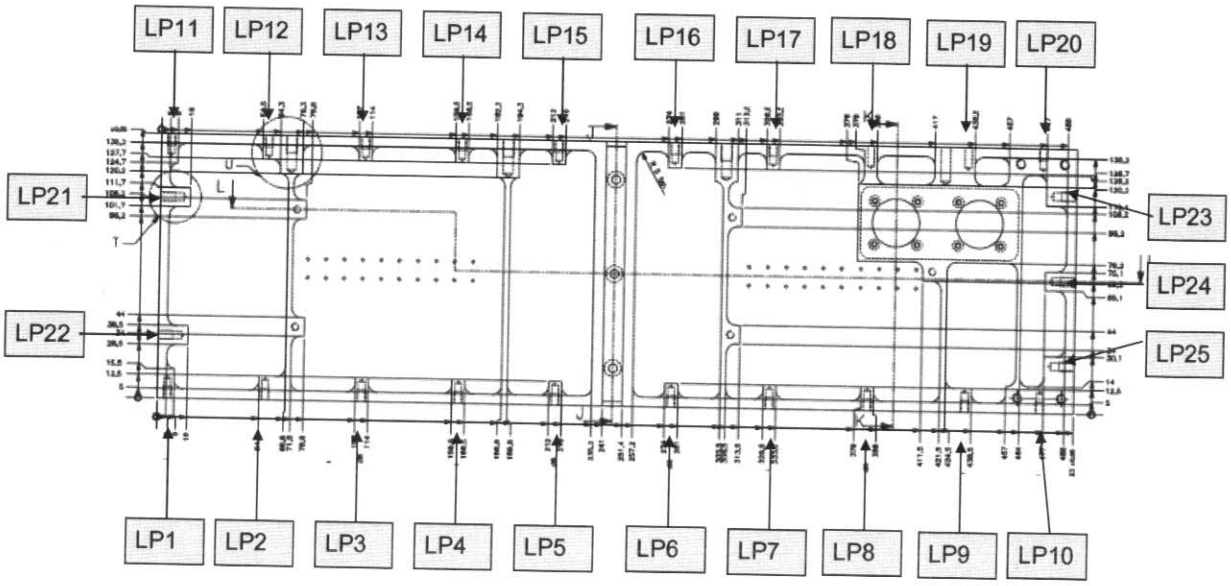

Fig 6-8 - left panel

Questo documento contiene informazioni di proprietà di CARLO GAVAZZI SPACE SpA. Tutti i diritti sono riservati.
All information contained in this document are property of CARLO GAVAZZI SPACE SpA. All right reserved.

6.2 STEP2

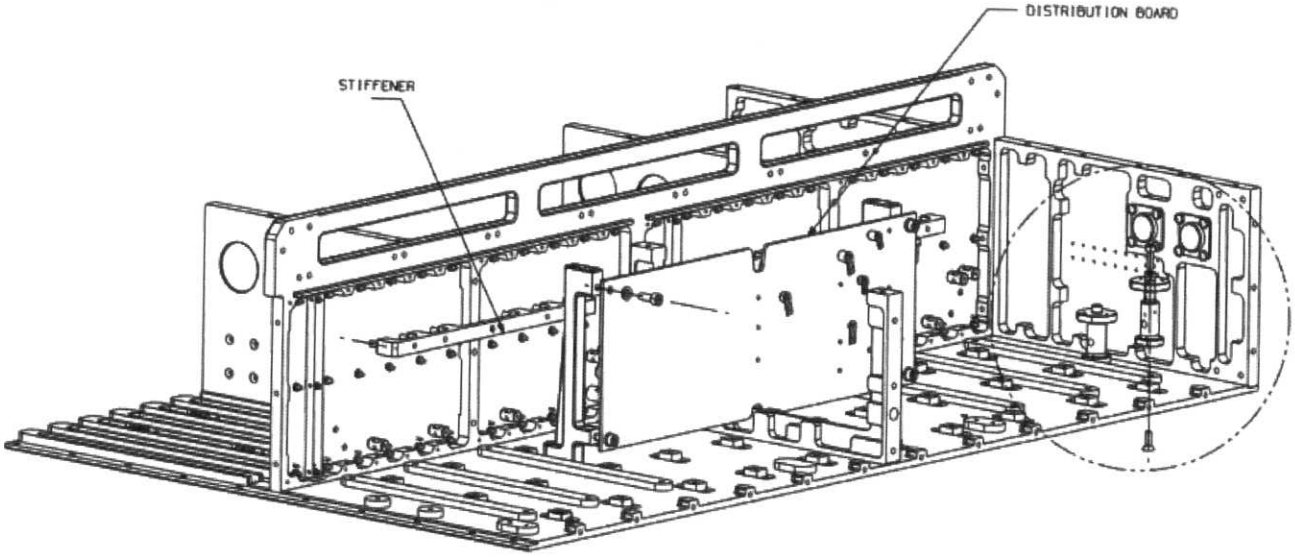

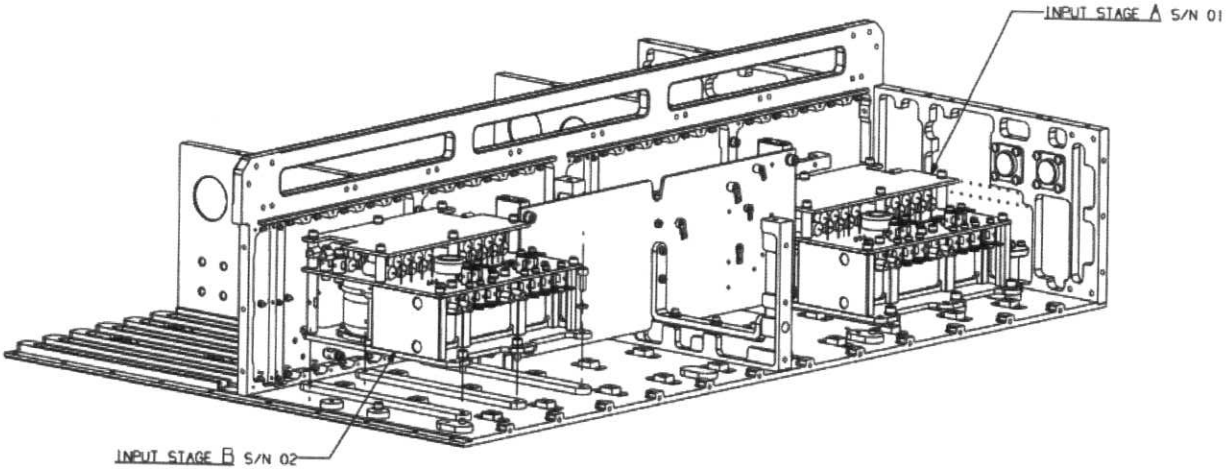

action	Description	Check date	PA	Remarks
6.2.1	Perform Running Torque measurement on the **PDS stiffener left** holes marked as ST1L to ST6L (see Fig 6-9). Report Running torque			
6.2.2	Perform Running Torque measurement on the **PDS stiffener right** holes marked as ST1R to ST6R (see Fig 6-9). Report Running torque			
6.2.3	Fix **PDS stiffener left** with the ***motherboard mid frame,*** and record final tightening torque for ST1L to ST6L and MB28 correspondent bolts			
6.2.4	Fix **PDS stiffener right** with the ***motherboard mid frame,*** and record final tightening torque for ST1R to ST6R and MB27 correspondent bolts			

Questo documento contiene informazioni di proprietà di CARLO GAVAZZI SPACE SpA. Tutti i diritti sono riservati.
All information contained in this document are property of CARLO GAVAZZI SPACE SpA. All right reserved.

6.2.5	Perform Running Torque measurement on the **PDS Connecting Spacer1** holes marked as CS1-1 and CS1-2 (see *Fig 6-10*). Report Running torque			
6.2.6	Perform Running Torque measurement on the **PDS Connecting Spacer2** holes marked as CS2-1 and CS2-2 (see *Fig 6-10*). Report Running torque			
6.2.7	Fix **PDS Connecting Spacer1** with the ***baseplate,*** and record final tightening torque for CS1-1 correspondent bolt			
6.2.8	Fix **PDS Connecting Plate1** with the ***Connecting Spacer1*** and record final tightening torque for CS1-2 correspondent bolt			
6.2.9	Fix **PDS Connecting Spacer2** with the ***baseplate,*** and record final tightening torque for CS2-1 correspondent bolt			
6.2.10	Fix **PDS Connecting Plate2** with the ***Connecting Spacer2*** and record final tightening torque for CS2-2 correspondent bolt			
6.2.11	Fix **PDS Distribution board** with the ***PDS supports left and right*** and record final tightening torque for SP3L, SP4L and SP3R, SP4R correspondent bolt			
6.2.12	Prepare all cables, acc . to internal cabling document [AD6]			
6.2.13	Perform Running Torque measurement on the **baseplate** holes marked as BP1 to BP12 (see *Fig 6-11*). Report Running torque			
6.2.14	Fix **PDS input stage s/n01** to the ***baseplate*** and record final tightening torque for BP1 to BP6 correspondent bolts			
6.2.15	Fix **PDS input stage s/n02** to the ***baseplate*** and record final tightening torque for BP7 to BP12 correspondent bolts			
6.2.16	Fix **bonding bar #1** on the two ***PDS stiffeners*** As shown on sheet 4 of [AD2]			
6.2.17	Fix **bonding bar #2** and **bonding bar #3** as shown on sheet 4 of [AD2]			

Questo documento contiene informazioni di proprietà di CARLO GAVAZZI SPACE SpA. Tutti i diritti sono riservati.
All information contained in this document are property of CARLO GAVAZZI SPACE SpA. All right reserved.

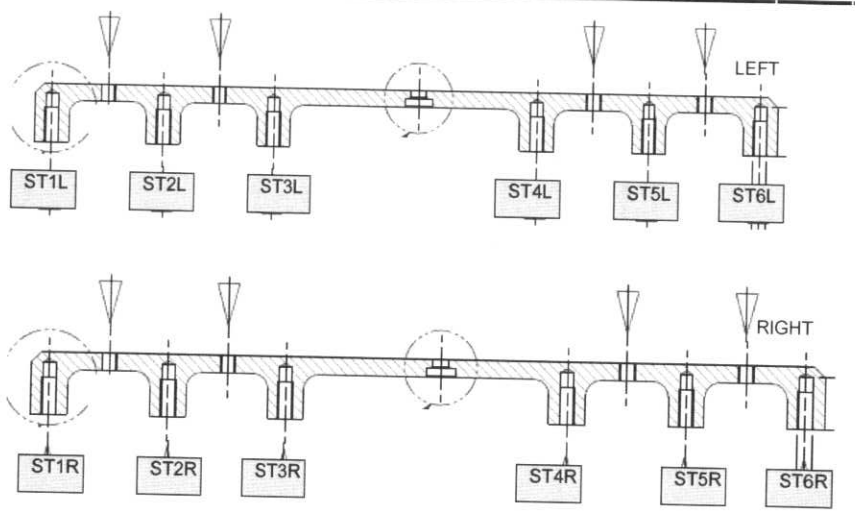

Fig 6-9 – Stiffener left and right

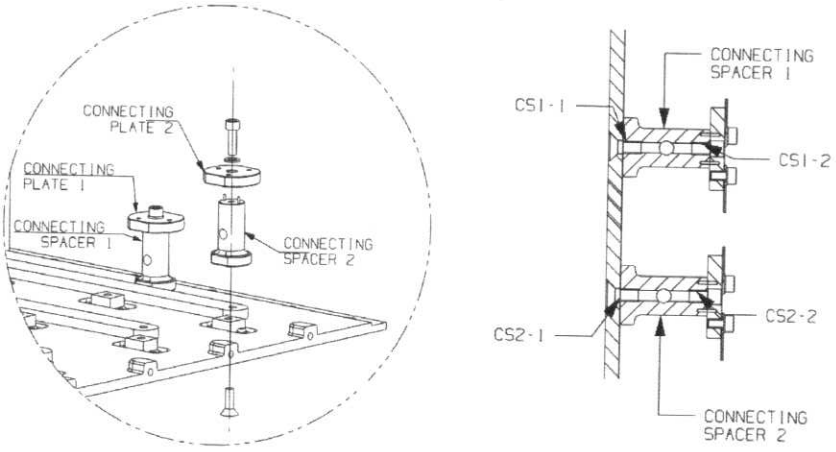

Fig 6-10 - connecting spacer 1 and 2

Questo documento contiene informazioni di proprietà di CARLO GAVAZZI SPACE SpA. Tutti i diritti sono riservati.
All information contained in this document are property of CARLO GAVAZZI SPACE SpA. All right reserved.

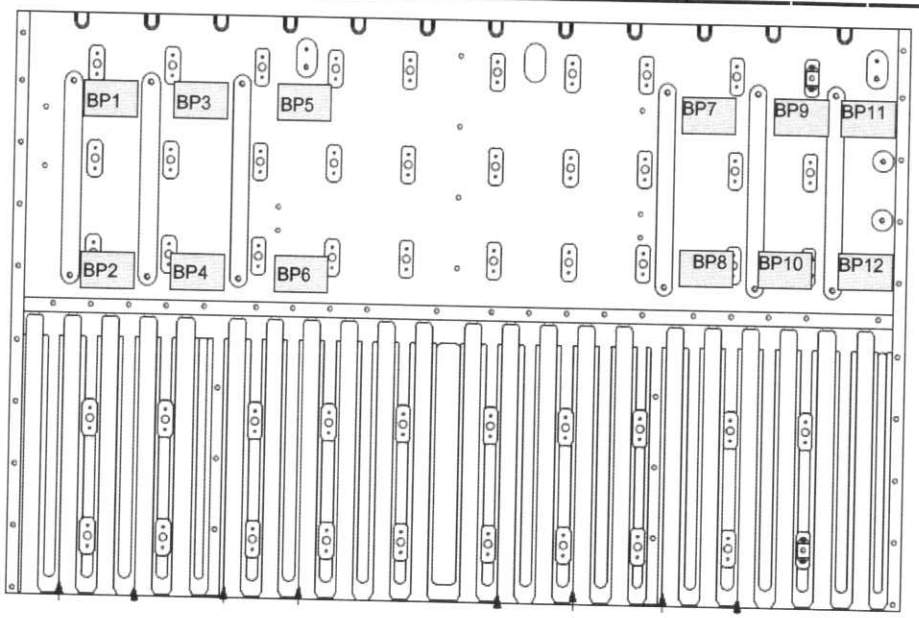

Fig 6-11 - Baseplate - connection for input stages holes

Questo documento contiene informazioni di proprietà di CARLO GAVAZZI SPACE SpA. Tutti i diritti sono riservati.
All information contained in this document are property of CARLO GAVAZZI SPACE SpA. All right reserved.

6.3 STEP3

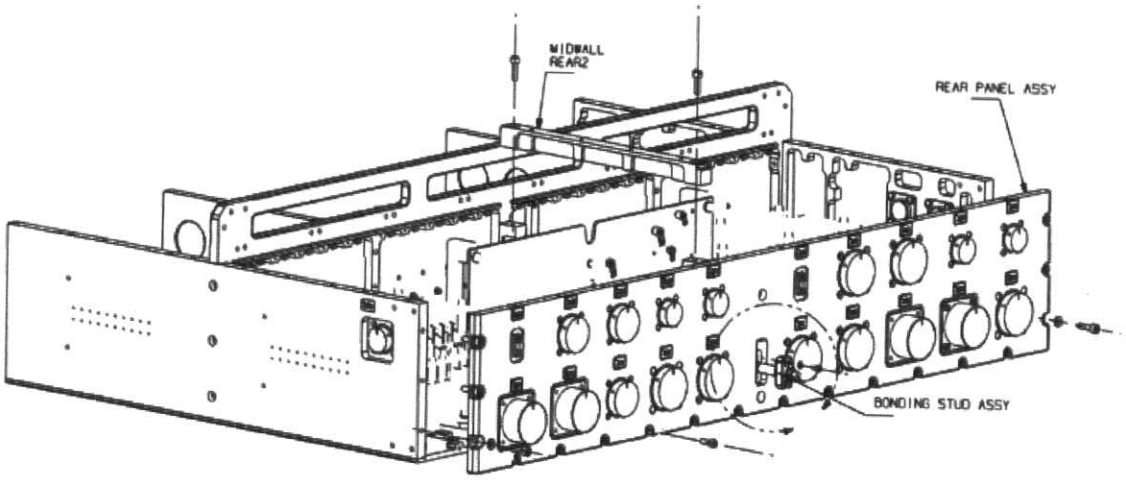

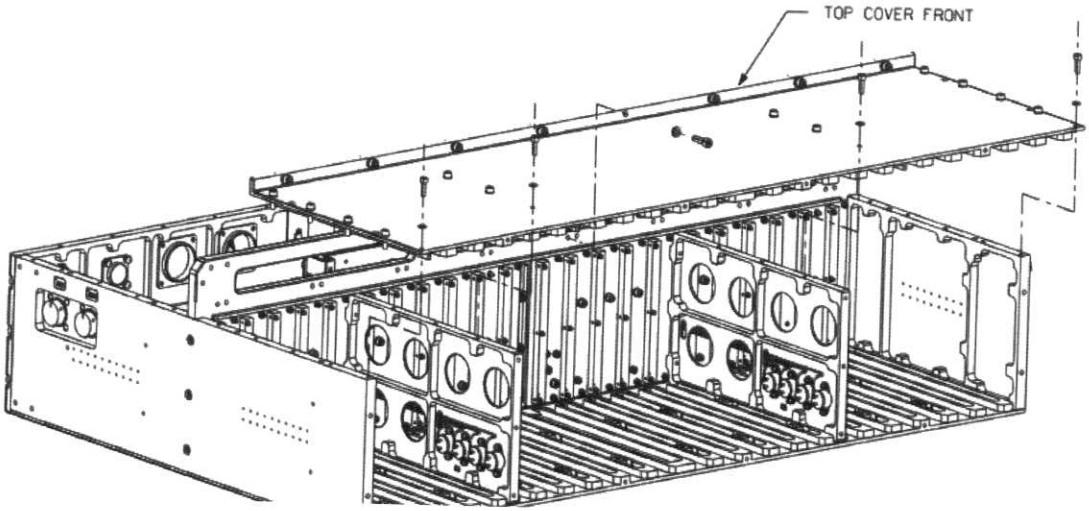

action	Description	Check date	PA	Remarks
6.3.1	Perform Running Torque measurement on the **baseplate** holes marked as BSR1 to BSR12 (see Fig 6-12). Report Running torque			
6.3.2	Fix **PDS Rear panel assy** with ***baseplate,*** and record final tightening torque for BSR1 to BSR12 correspondent bolts			
6.3.3	Fix **PDS Rear panel assy** with ***left panel,*** and record final tightening torque for LP23 to LP25 correspondent bolts			
6.3.4	Fix **PDS Rear panel assy** with ***right panel,*** and record final tightening torque for RP23 to RP25 correspondent bolts			
6.3.5	Fix **PDS Rear panel assy** with ***midwall rear1,*** and record final tightening torque for MW8 to MW10 correspondent bolts			

Questo documento contiene informazioni di proprietà di CARLO GAVAZZI SPACE SpA. Tutti i diritti sono riservati.
All information contained in this document are property of CARLO GAVAZZI SPACE SpA. All right reserved.

6.3.6	Fix **bonding stud assy** on ***PDS rear panel*** as shown on sheet 5 of [AD2]			
6.3.7	Fix **PDS Midwall rear2** with ***midwall rear1,*** and record final tightening torque for MW11 and MW12 correspondent bolts			
6.3.8	Perform Running Torque measurement on the **Midwall rear2** holes marked as MW20 to MV23 (see Fig 6-13). Report Running torque			
6.3.9	Fix all cables, acc . to internal cabling document [AD6] and assembly drawing [AD2]			
6.3.10	Perform Running Torque measurement on the **Motherboard mid frame** holes marked as MF1 to MF8 (see Fig 6-14). Report Running torque			
6.3.11	Fix **PDS Top cover front** with ***right panel,*** and record final tightening torque for RP1 to RP5 correspondent bolts			
6.3.12	Fix **PDS Top cover front** with ***left panel,*** and record final tightening torque for LP11 to LP15 correspondent bolts			
6.3.13	Fix **PDS Top cover front** with ***midwall front left,*** and record final tightening torque for MW1L to MW3L correspondent bolts			
6.3.14	Fix **PDS Top cover front** with ***midwall front right,*** and record final tightening torque for MW1R to MW3R correspondent bolts			
6.3.15	Fix **PDS Top cover front** with ***motherboard mid frame,*** and record final tightening torque for MF1 to MF8 correspondent bolts			

Questo documento contiene informazioni di proprietà di CARLO GAVAZZI SPACE SpA. Tutti i diritti sono riservati.
All information contained in this document are property of CARLO GAVAZZI SPACE SpA. All right reserved.

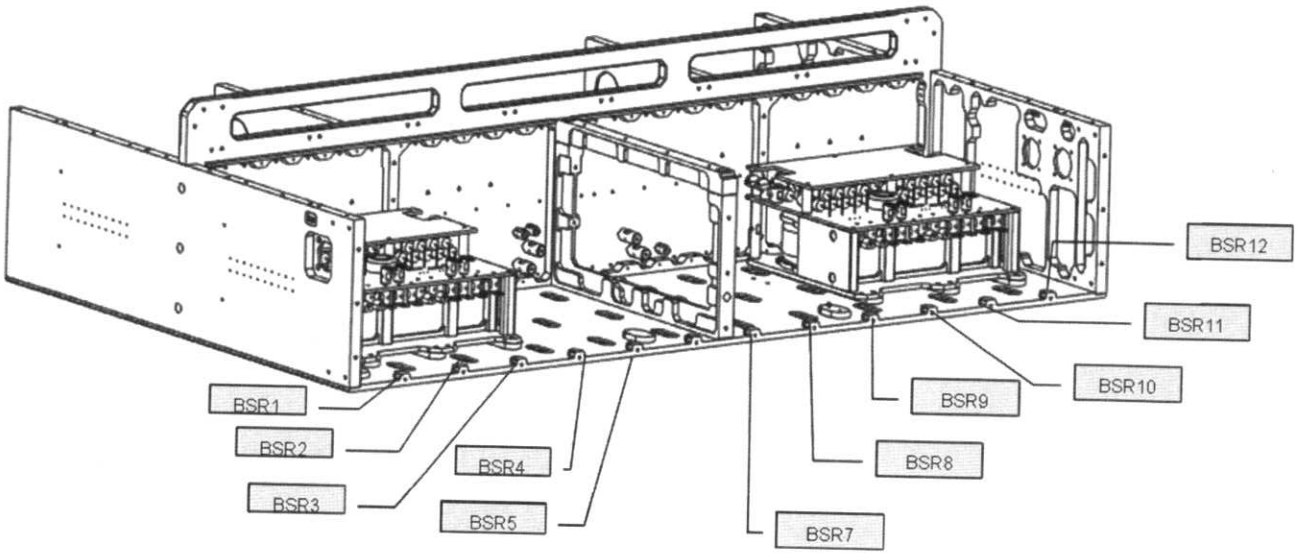

Fig 6-12 – baseplate : holes i/f with rear panel

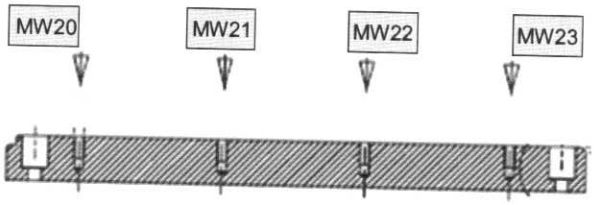

Fig 6-13 - Midwall Rear 2

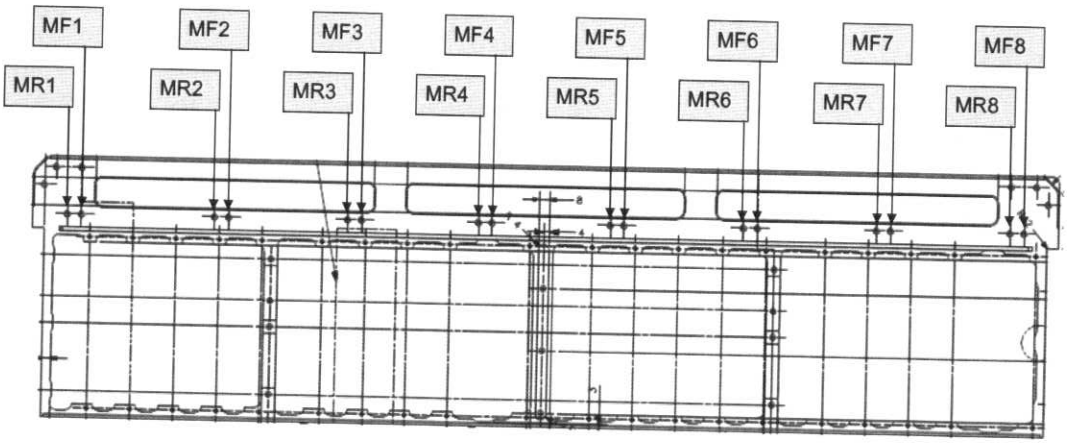

Fig 6-14 - Motherboard frame - connection to top covers

Questo documento contiene informazioni di proprietà di CARLO GAVAZZI SPACE SpA. Tutti i diritti sono riservati.
All information contained in this document are property of CARLO GAVAZZI SPACE SpA. All right reserved.

6.4 STEP4

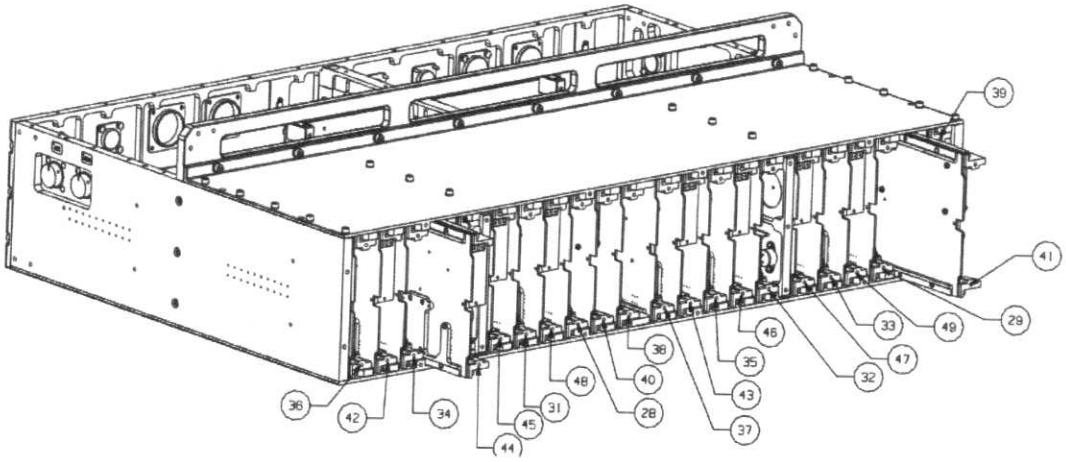

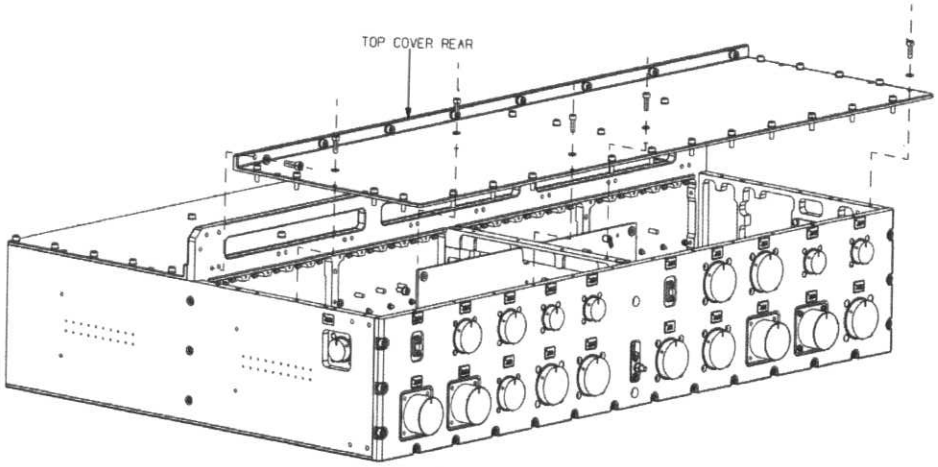

action	Description	Check date	PA	Remarks
6.4.1	Perform Running Torque measurement on the **PDS Top cover front** holes marked as TP1 to TP4 (see Fig 6-17). Report Running torque			
6.4.2	Install all the boards in the dedicated slots as indicated on sheet 7 of [AD2]; Screw both upper and lower card retainers for each board with a 0.68Nm torque			
6.4.3	Perform Running Torque measurement on the **PDS Rear panel assy** holes marked as RP1 to RP12 (see Fig 6-15). Report Running torque			
6.4.4	Fix **PDS Top cover Rear** with ***Rear panel,*** and record final tightening torque for RP1 to RP12			

Questo documento contiene informazioni di proprietà di CARLO GAVAZZI SPACE SpA. Tutti i diritti sono riservati.
All information contained in this document are property of CARLO GAVAZZI SPACE SpA. All right reserved.

	correspondent bolts			
6.4.5	Fix **PDS Top cover Rear** with ***left panel,*** and record final tightening torque for LP16 to LP20 correspondent bolts			
6.4.6	Fix **PDS Top Cover Rear** with ***right panel,*** and record final tightening torque for RP6 to RP10 correspondent bolts			
6.4.7	Fix **PDS Top cover rear** with ***midwall rear2 right,*** and record final tightening torque for MW20 to MW23 correspondent bolts			
6.4.8	Fix **PDS Top cover rear** with ***supports left and right,*** and record final tightening torque for SPL5 and SPR5 correspondent bolts			
6.4.9	Fix **PDS Top cover rear** with ***motherboard mid frame,*** and record final tightening torque for MR1 to MR8 correspondent bolts			
6.4.10	Perform Running Torque measurement on the **baseplate** holes marked as BSF1 to BSF4 (see Fig 6-16). Report Running torque			
6.4.11	Fix **PDS Front panel** with ***baseplate,*** and record final tightening torque for BSF1 to BSF4 correspondent bolts			
6.4.12	Fix **PDS Front panel** with ***left panel,*** and record final tightening torque for LP21 to LP22 correspondent bolts			
6.4.13	Fix **PDS Front panel** with ***right panel,*** and record final tightening torque for RP21 to RP22 correspondent bolts			
6.4.14	Fix **PDS Front panel** with ***midwall front left,*** and record final tightening torque for MW10L to MW12L correspondent bolts			
6.4.15	Fix **PDS Front panel** with ***midwall front right,*** and record final tightening torque for MW10R to MW12R correspondent bolts			
6.4.16	Glue **PDS Label** on ***front panel*** as shown on sheet 10 of [AD2]			
6.4.17	Install **thermal coverage** (silver Teflon) on ***top cover rear*** as depicted on Chapter 8			
6.4.18	Place **the protective cover** for J300 P/N MS27510F14CL As shown on sheet 10 of [AD2]			
6.4.19	Check PB2 torques two weeks after first installation. If necessary (i.e. the torque is lower than the nominal one), set torque to 0.68Nm			

Questo documento contiene informazioni di proprietà di CARLO GAVAZZI SPACE SpA. Tutti i diritti sono riservati.
All information contained in this document are property of CARLO GAVAZZI SPACE SpA. All right reserved.

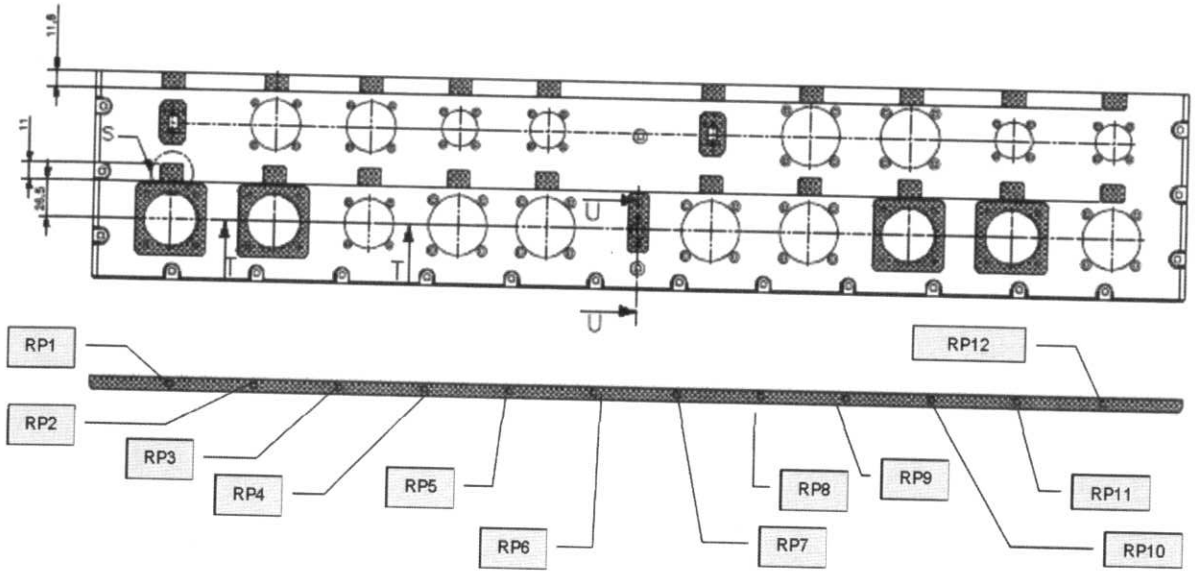

Fig 6-15 - Rear panel : holes i/f with Top cover Rear

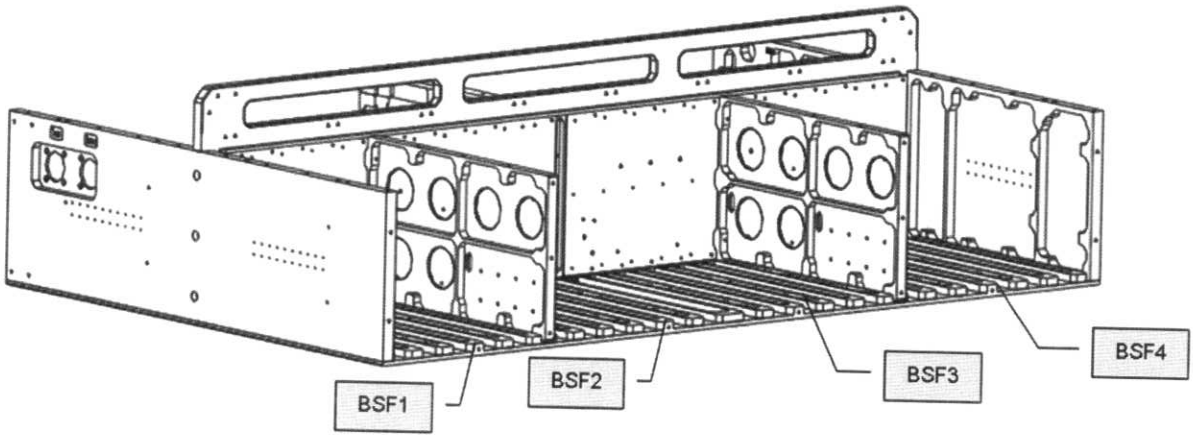

Fig 6-16 – baseplate : holes i/f with front panel

Questo documento contiene informazioni di proprietà di CARLO GAVAZZI SPACE SpA. Tutti i diritti sono riservati.
All information contained in this document are property of CARLO GAVAZZI SPACE SpA. All right reserved.

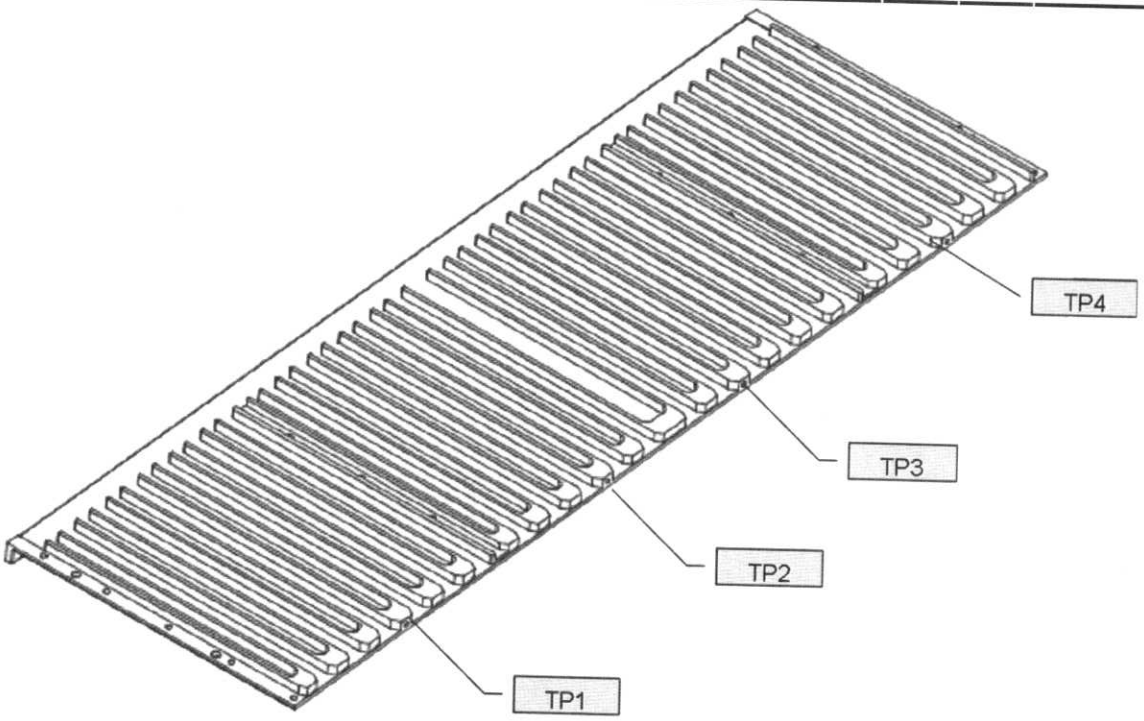

Fig 6-17 - Top cover front

Questo documento contiene informazioni di proprietà di CARLO GAVAZZI SPACE SpA. Tutti i diritti sono riservati.
All information contained in this document are property of CARLO GAVAZZI SPACE SpA. All right reserved.

7. TEST PROCEDURE VARIATION SHEET

In case that for any reason the test procedure has to be changed, the change shall be described in a Procedure Variation Sheet (PVS) as shown in the next page.

The PVS shall contain:

- Reference to the procedure to be changed
- Reference to the relevant procedure page and paragraph
- Description of the change, possibly in the form was….is…..
- Reason for change
- Technician, QA, Responsible signatures and dates
- Customer signature and date (when required).

Each PVS shall be identified by a reference number provided in sequential order.

All the generated PVS shall be collected in a dedicated section of the Activity Report.

Questo documento contiene informazioni di proprietà di CARLO GAVAZZI SPACE SpA. Tutti i diritti sono riservati.
All information contained in this document are property of CARLO GAVAZZI SPACE SpA. All right reserved.

PROCEDURE VARIATION SHEET ref. N°:

Procedure Ref.:	Page Revised:	Paragraph Revised:

Description of Change:

Reason for Change:

CONCURRENCE

Technician	QA	System Eng.		Customer
Date	Date	Date		Date

Questo documento contiene informazioni di proprietà di CARLO GAVAZZI SPACE SpA. Tutti i diritti sono riservati.
All information contained in this document are property of CARLO GAVAZZI SPACE SpA. All right reserved.

8. SILVER TEFLON TAPE APPLICATION PROCEDURE INTRODUCTION

This chapter describes the procedure to apply silver tape to top rear cover of PDS, as derived from the thermal mathematical and geometrical model of AMS-02 wake radiator described in [RD1].

8.1 TAPE ARTICLE

The tape article is a FEP (Teflon) film – adhesive on the back side- with the following characteristics:

- Part number : 146415-002 (G401905)
- Lay-up (5 mils thick) : Teflon /AG/Inc/966 adhesive
- Perforated

The tape will be available in rolls, 2 inch wide , 108 feet long

8.2 TAPE CONFIGURATION

FEP film is to be applied only over the top rear cover of PDS (green zone in figure).

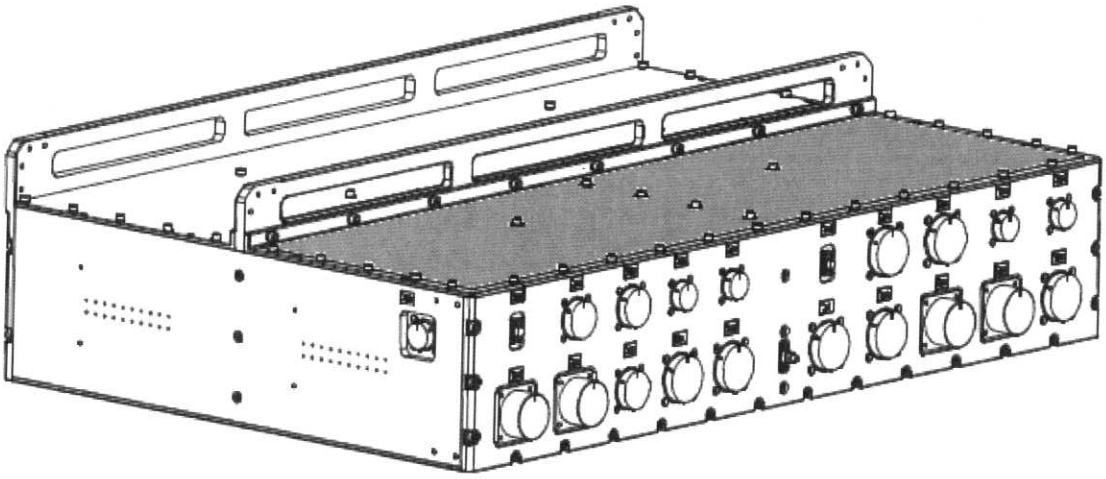

Fig 8-1 - Tape application area on PDS

A general remark: on the PDS top rear cover, there are areas with alodine surface treatment; these areas are shown in drawing 10-AMS02PDS-000.11 [AD7]:

Tape MUST NOT be installed on the surfaces which have been alodined for bonding reasons.

Particular care must be used on the surface next to holes. Tape must not be installed on a 10mm circa wide strip around the holes on the border.
Two blank – w/o tape - areas (10mmx10mm) shall be foreseen tape in the zones where the holes for connection with the two PDS supports (P/N 10-AMS02PDS-000.14) are located.
Four additional blank – w/o tape - areas (10mmx10mm) shall be foreseen where the four holes in the middle are located.

Questo documento contiene informazioni di proprietà di CARLO GAVAZZI SPACE SpA. Tutti i diritti sono riservati.
All information contained in this document are property of CARLO GAVAZZI SPACE SpA. All right reserved.

The green surface in the following figure show the area where the tape has to be applied.

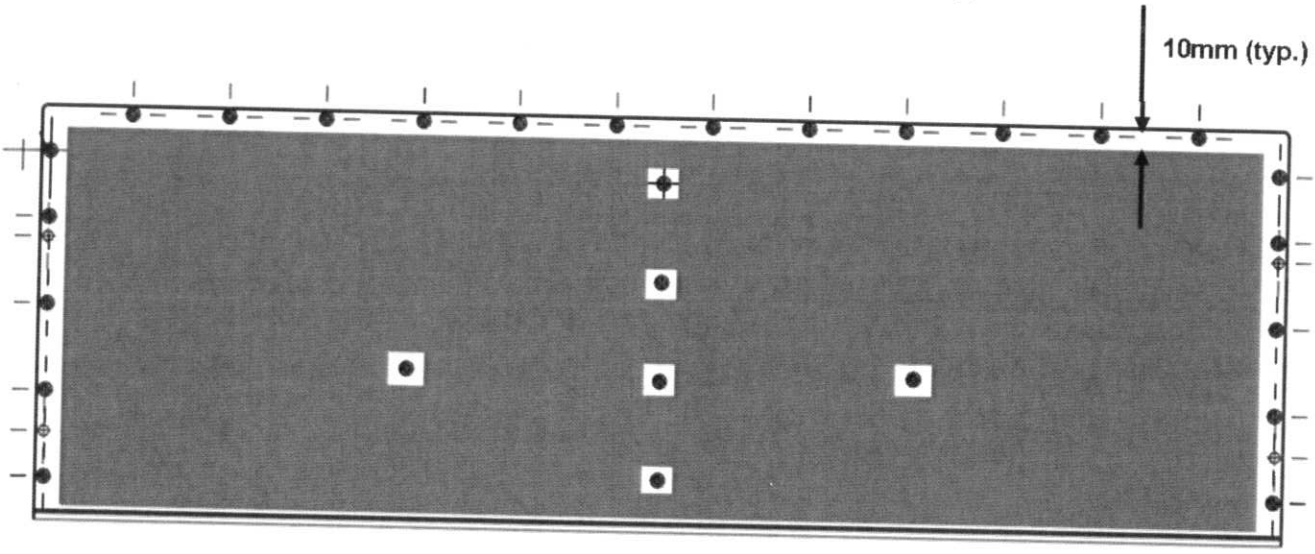

Fig 8-2 - Detail of stay-out zones

8.3 STEP BY STEP PROCEDURE

The step-by-step procedure sheets are provided in the following pages.

The following fields of the data sheets:

- UUT DATA
- Measured value

shall be filled during the test performances and shall be part of the Activity Report together with photographs, sketches, etc. that could be useful to document the activity execution/results.

The Remarks field shall be used to provide, where appropriate, reference to NCRs and PVS.

Activity Report reference data shall be added in the relevant field.

Each data sheet (including the attachments) shall be certified by the System Engineer's signature and date.

Questo documento contiene informazioni di proprietà di CARLO GAVAZZI SPACE SpA. Tutti i diritti sono riservati.
All information contained in this document are property of CARLO GAVAZZI SPACE SpA. All right reserved.

Step	Tape application sequence	Date	operator	PA	remarks
1	**PDS top rear cover PRELIMINARY OPERATIONS**				
1.1	Identify the surfaces of the PDS top rear cover where the tape is to be applied according to the following sketch:				Holes and areas which were alodined for bonding purposes are NOT to be covered.
2	**PDS top rear cover tape application**				
2.1	Clean the surface of top rear cover where the tape is to be applied with Isopropyl Alcohol.				
2.2	Cut the Teflon tape 2" into stripes (not longer than 15 " or 38,1cm) according to the surface side to be covered (in order to keep the tape area less than 31 square inch =200cm2). LEAVE the orange protective cover on the tape. Record the stripes length (for weight considerations).				
2.3	If the surface where the tape is to be applied is equipped with holes and areas which have been alodined for bonding purposes, adjust the tape with the suitable tools (LEAVE the orange protective cover on the tape). For edge holes leave the complete row on the part uncovered. For the centred holes leave a squared area 10mm x 10mm uncovered. For the areas which have been alodined for bonding purposes, adjust the tape over the part accordingly.				
2.4	Once the tape stripe is ready, remove gradually the liner "rolling" the tape down on the surface. Apply finger pressure to the tape in the direction parallel to the stripe length and perpendicularly from the center to the external edges in a manner that will squeeze out any air bubble.				
2.5	In case additional tape is needed to cover the same angle side, do NOT overlap with the previous tape stripe.				
2.6	Repeat steps from 2.2 to 2.5 until PDS top rear cover surface is fully covered by tape.				
2.7	Perform a visual check of the installed tape.				
2.8	REMOVE the orange protective cover on the tape before Thermal Test Campain				

Questo documento contiene informazioni di proprietà di CARLO GAVAZZI SPACE SpA: Tutti i diritti sono riservati
All information contained in this document are property of CARLO GAVAZZI SPACE SpA. All right reserved.

ANNEX 1. – SCREW TORQUE LOG SHEET

Questo documento contiene informazioni di proprietà di CARLO GAVAZZI SPACE SpA: Tutti i diritti sono riservati
All information contained in this document are property of CARLO GAVAZZI SPACE SpA. All right reserved.

part	Screw ID	BOLT size	Running torque limits [Nm]	Meas. Running torque [Nm]	Required Seating Torque limits [Nm]	Final Integ.				remarks
						Final torque [Nm] = Meas. Running torque + Seating Torque	Date	Signature	PA. Signature	
MOTHERBOARD FRAME	MB1	MS244671-14	1.1÷ 0.17		1.2					
	MB2	MS244671-14	1.1÷ 0.17		1.2					
	MB3	MS244671-14	1.1÷ 0.17		1.2					
	MB4	MS244671-14	1.1÷ 0.17		1.2					
	MB5	MS244671-14	1.1÷ 0.17		1.2					
	MB6	MS244671-14	1.1÷ 0.17		1.2					
	MB7	MS244671-14	1.1÷ 0.17		1.2					
	MB8	MS244671-14	1.1÷ 0.17		1.2					
	MB9	MS244671-14	1.1÷ 0.17		1.2					
	MB10	MS244671-14	1.1÷ 0.17		1.2					
	MB11	MS244671-14	1.1÷ 0.17		1.2					
	MB12	MS244671-14	1.1÷ 0.17		1.2					
	MB13	MS244671-14	1.1÷ 0.17		1.2					
	MB14	MS244671-14	1.1÷ 0.17		1.2					
	MB15	MS244671-14	1.1÷ 0.17		1.2					
	MB16	MS244671-14	1.1÷ 0.17		1.2					
	MB17	MS244671-14	1.1÷ 0.17		1.2					

Questo documento contiene informazioni di proprietà di CARLO GAVAZZI SPACE SpA. Tutti i diritti sono riservati.
All information contained in this document are property of CARLO GAVAZZI SPACE SpA. All right reserved.

part	Screw ID	BOLT size	Running torque limits [Nm]	Meas. Running torque [Nm]	Required Seating Torque limits [Nm]	Final Integ.				remarks
						Final torque [Nm] = Meas. Running torque + Seating Torque	Date	Signature	PA. Signature	
MOTHERBOARD FRAME	MB18	MS244671-14	1.1÷ 0.17		1.2					
	MB19	MS244671-14	1.1÷ 0.17		1.2					
	MB20	MS244671-14	1.1÷ 0.17		1.2					
	MB21	NAS1352N08-6	1.1÷ 0.17		2.3÷ 2					
	MB22	NAS1352N08-6	1.1÷ 0.17		2.3÷ 2					
	MB23	NAS1352N08-6	1.1÷ 0.17		2.3÷ 2					
	MB24	NAS1352N08-6	1.1÷ 0.17		2.3÷ 2					
	MB25	NAS1352N08-6	1.1÷ 0.17		2.3÷ 2					
	MB26	NAS1352N08-6	1.1÷ 0.17		2.3÷ 2					
	MB27	NAS1352N08-10	1.1÷ 0.17		2.3÷ 2					
	MB28	NAS1352N08-10	1.1÷ 0.17		2.3÷ 2					
	MF1	NAS1352N3-10	2÷ 0.2		3.6÷3.4					
	MF2	NAS1352N3-10	2÷ 0.2		3.6÷3.4					
	MF3	NAS1352N3-10	2÷ 0.2		3.6÷3.4					
	MF4	NAS1352N3-10	2÷ 0.2		3.6÷3.4					
	MF5	NAS1352N3-10	2÷ 0.2		3.6÷3.4					
	MF6	NAS1352N3-10	2÷ 0.2		3.6÷3.4					
	MF7	NAS1352N3-10	2÷ 0.2		3.6÷3.4					
	MF8	NAS1352N3-10	2÷ 0.2		3.6÷3.4					

Questo documento contiene informazioni di proprietà di CARLO GAVAZZI SPACE SpA. Tutti i diritti sono riservati.
All information contained in this document are property of CARLO GAVAZZI SPACE SpA. All right reserved.

part	Screw ID	BOLT size	Running torque limits [Nm]	Meas. Running torque [Nm]	Required Seating Torque limits [Nm]	Final Integ.				remarks
						Final torque [Nm] = Meas. Running torque + Seating Torque	Date	Signature	PA. Signature	
MOTHERBOARD FRAME	MR1	NAS1352N3-10	2÷ 0.2		3.6÷3.4					
	MR2	NAS1352N3-10	2÷ 0.2		3.6÷3.4					
	MR3	NAS1352N3-10	2÷ 0.2		3.6÷3.4					
	MR4	NAS1352N3-10	2÷ 0.2		3.6÷3.4					
	MR5	NAS1352N3-10	2÷ 0.2		3.6÷3.4					
	MR6	NAS1352N3-10	2÷ 0.2		3.6÷3.4					
	MR7	NAS1352N3-10	2÷ 0.2		3.6÷3.4					
	MR8	NAS1352N3-10	2÷ 0.2		3.6÷3.4					

Questo documento contiene informazioni di proprietà di CARLO GAVAZZI SPACE SpA. Tutti i diritti sono riservati.
All information contained in this document are property of CARLO GAVAZZI SPACE SpA. All right reserved.

part	Screw ID	BOLT size	Running torque limits [Nm]	Meas. Running torque [Nm]	Required Seating Torque limits [Nm]	Final Integ.				remarks
						Final torque [Nm] = Meas. Running torque + Seating Torque	Date	Signature	PA. Signature	
MIDWALL REAR 1	MW1	MS244671-14	1.1÷ 0.17		1.2					
	MW2	MS244671-14	1.1÷ 0.17		1.2					
	MW3	MS244671-14	1.1÷ 0.17		1.2					
	MW4	MS244671-14	1.1÷ 0.17		1.2					
	MW5	NAS1352N08-8	1.1÷ 0.17		2.3÷ 2					
	MW6	NAS1352N08-8	1.1÷ 0.17		2.3÷ 2					
	MW7	NAS1352N08-8	1.1÷ 0.17		2.3÷ 2					
	MW8	NAS1351N3-8	2÷ 0.2		3.6÷3.4					
	MW9	NAS1351N3-8	2÷ 0.2		3.6÷3.4					
	MW10	NAS1351N3-8	2÷ 0.2		3.6÷3.4					
	MW11	NAS1352N3-10	2÷ 0.2		3.6÷3.4					
	MW12	NAS1352N3-10	2÷ 0.2		3.6÷3.4					
MIDWALL REAR 2	MW20	NAS1352N08-8	1.1÷ 0.17		2.3÷ 2					
	MW21	NAS1352N08-8	1.1÷ 0.17		2.3÷ 2					
	MW22	NAS1352N08-8	1.1÷ 0.17		2.3÷ 2					
	MW23	NAS1352N08-8	1.1÷ 0.17		2.3÷ 2					

Questo documento contiene informazioni di proprietà di CARLO GAVAZZI SPACE SpA. Tutti i diritti sono riservati.
All information contained in this document are property of CARLO GAVAZZI SPACE SpA. All right reserved.

part	Screw ID	BOLT size	Running torque limits [Nm]	Meas. Running torque [Nm]	Required Seating Torque limits [Nm]	Final Integ.				remarks
						Final torque [Nm] = Meas. Running torque + Seating Torque	Date	Signature	PA. Signature	
MIDWALL FRONT left	MWL1	NAS1352N08-8	1.1÷ 0.17		2.3÷ 2					
	MWL2	NAS1352N08-8	1.1÷ 0.17		2.3÷ 2					
	MWL3	NAS1352N08-8	1.1÷ 0.17		2.3÷ 2					
	MWL4	MS244671-14	1.1÷ 0.17		1.2					
	MWL5	MS244671-14	1.1÷ 0.17		1.2					
	MWL6	MS244671-14	1.1÷ 0.17		1.2					
	MWL7	NAS1352N08-12	1.1÷ 0.17		2.3÷ 2					
	MWL8	NAS1352N08-12	1.1÷ 0.17		2.3÷ 2					
	MWL9	NAS1352N08-12	1.1÷ 0.17		2.3÷ 2					
	MWL10	NAS1352N08-8	1.1÷ 0.17		2.3÷ 2					
	MWL11	NAS1352N08-8	1.1÷ 0.17		2.3÷ 2					
	MWL12	NAS1352N08-8	1.1÷ 0.17		2.3÷ 2					

Questo documento contiene informazioni di proprietà di CARLO GAVAZZI SPACE SpA. Tutti i diritti sono riservati.
All information contained in this document are property of CARLO GAVAZZI SPACE SpA. All right reserved.

part	Screw ID	BOLT size	Running torque limits [Nm]	Meas. Running torque [Nm]	Required Seating Torque limits [Nm]	Final Integ.				remarks
						Final torque [Nm] = Meas. Running torque + Seating Torque	Date	Signature	PA. Signature	
MIDWALL FRONT right	MWR1	NAS1352N08-8	1.1÷ 0.17		2.3÷ 2					
	MWR2	NAS1352N08-8	1.1÷ 0.17		2.3÷ 2					
	MWR3	NAS1352N08-8	1.1÷ 0.17		2.3÷ 2					
	MWR4	MS244671-14	1.1÷ 0.17		1.2					
	MWR5	MS244671-14	1.1÷ 0.17		1.2					
	MWR6	MS244671-14	1.1÷ 0.17		1.2					
	MWR7	NAS1352N08-12	1.1÷ 0.17		2.3÷ 2					
	MWR8	NAS1352N08-12	1.1÷ 0.17		2.3÷ 2					
	MWR9	NAS1352N08-12	1.1÷ 0.17		2.3÷ 2					
	MWR10	NAS1352N08-8	1.1÷ 0.17		2.3÷ 2					
	MWR11	NAS1352N08-8	1.1÷ 0.17		2.3÷ 2					
	MWR12	NAS1352N08-8	1.1÷ 0.17		2.3÷ 2					

Questo documento contiene informazioni di proprietà di CARLO GAVAZZI SPACE SpA. Tutti i diritti sono riservati.
All information contained in this document are property of CARLO GAVAZZI SPACE SpA. All right reserved.

part	Screw ID	BOLT size	Running torque limits [Nm]	Meas. Running torque [Nm]	Required Seating Torque limits [Nm]	Final Integ.				remarks
						Final torque [Nm] = Meas. Running torque + Seating Torque	Date	Signature	PA. Signature	
PDS SUPPORT left	SP1L	MS244671-14	1.1÷ 0.17		1.2					
	SP2L	MS244671-14	1.1÷ 0.17		1.2					
	SP3L	NAS1351N3-8	2÷ 0.2		3.6÷3.4					
	SP4L	NAS1351N3-8	2÷ 0.2		3.6÷3.4					
	SP5L	NAS1352N08-6	1.1÷ 0.17		2.3÷ 2					
PDS SUPPORT right	SP1R	MS244671-14	1.1÷ 0.17		1.2					
	SP2R	MS244671-14	1.1÷ 0.17		1.2					
	SP3R	NAS1351N3-8	2÷ 0.2		3.6÷3.4					
	SP4R	NAS1351N3-8	2÷ 0.2		3.6÷3.4					
	SP5R	NAS1352N08-6	1.1÷ 0.17		2.3÷ 2					
BONDING BAR SPACER	BS1	NAS1351N3-10	2÷ 0.2		3.6÷3.4					

Questo documento contiene informazioni di proprietà di CARLO GAVAZZI SPACE SpA. Tutti i diritti sono riservati.
All information contained in this document are property of CARLO GAVAZZI SPACE SpA. All right reserved.

part	Screw ID	BOLT size	Running torque limits [Nm]	Meas. Running torque [Nm]	Required Seating Torque limits [Nm]	Final Integ.				remarks
						Final torque [Nm] = Meas. Running torque + Seating Torque	Date	Signature	PA. Signature	
RIGHT PANEL	RP1	NAS1352N08-8	1.1÷ 0.17		2.3÷ 2					
	RP2	NAS1352N08-8	1.1÷ 0.17		2.3÷ 2					
	RP3	NAS1352N08-8	1.1÷ 0.17		2.3÷ 2					
	RP4	NAS1352N08-8	1.1÷ 0.17		2.3÷ 2					
	RP5	NAS1352N08-8	1.1÷ 0.17		2.3÷ 2					
	RP6	NAS1352N08-8	1.1÷ 0.17		2.3÷ 2					
	RP7	NAS1352N08-8	1.1÷ 0.17		2.3÷ 2					
	RP8	NAS1352N08-8	1.1÷ 0.17		2.3÷ 2					
	RP9	NAS1352N08-8	1.1÷ 0.17		2.3÷ 2					
	RP10	NAS1352N08-8	1.1÷ 0.17		2.3÷ 2					
	RP11	MS244671-14	1.1÷ 0.17		1.2					
	RP12	MS244671-14	1.1÷ 0.17		1.2					
	RP13	MS244671-14	1.1÷ 0.17		1.2					
	RP14	MS244671-14	1.1÷ 0.17		1.2					
	RP15	MS244671-14	1.1÷ 0.17		1.2					
	RP16	MS244671-14	1.1÷ 0.17		1.2					
	RP17	MS244671-14	1.1÷ 0.17		1.2					
	RP18	MS244671-14	1.1÷ 0.17		1.2					

Questo documento contiene informazioni di proprietà di CARLO GAVAZZI SPACE SpA. Tutti i diritti sono riservati.
All information contained in this document are property of CARLO GAVAZZI SPACE SpA. All right reserved.

part	Screw ID	BOLT size	Running torque limits [Nm]	Meas. Running torque [Nm]	Required Seating Torque limits [Nm]	Final Integ.				remarks
						Final torque [Nm] = Meas. Running torque + Seating Torque	Date	Signature	PA. Signature	
RIGHT PANEL	RP19	MS244671-14	1.1÷ 0.17		1.2					
	RP20	MS244671-14	1.1÷ 0.17		1.2					
	RP21	NAS1351N3-10	2÷ 0.2		3.6÷3.4					
	RP22	NAS1351N3-10	2÷ 0.2		3.6÷3.4					
	RP23	NAS1351N3-10	2÷ 0.2		3.6÷3.4					
	RP24	NAS1351N3-10	2÷ 0.2		3.6÷3.4					
	RP25	NAS1351N3-10	2÷ 0.2		3.6÷3.4					

Questo documento contiene informazioni di proprietà di CARLO GAVAZZI SPACE SpA. Tutti i diritti sono riservati.
All information contained in this document are property of CARLO GAVAZZI SPACE SpA. All right reserved.

part	Screw ID	BOLT size	Running torque limits [Nm]	Meas. Running torque [Nm]	Required Seating Torque limits [Nm]	Final Integ.				remarks
						Final torque [Nm] = Meas. Running torque + Seating Torque	Date	Signature	PA. Signature	
LEFT PANEL	LP1	MS244671-14	1.1÷ 0.17		1.2					
	LP2	MS244671-14	1.1÷ 0.17		1.2					
	LP3	MS244671-14	1.1÷ 0.17		1.2					
	LP4	MS244671-14	1.1÷ 0.17		1.2					
	LP5	MS244671-14	1.1÷ 0.17		1.2					
	LP6	MS244671-14	1.1÷ 0.17		1.2					
	LP7	MS244671-14	1.1÷ 0.17		1.2					
	LP8	MS244671-14	1.1÷ 0.17		1.2					
	LP9	MS244671-14	1.1÷ 0.17		1.2					
	LP10	MS244671-14	1.1÷ 0.17		1.2					
	LP11	NAS1352N08-8	1.1÷ 0.17		2.3÷ 2					
	LP12	NAS1352N08-8	1.1÷ 0.17		2.3÷ 2					
	LP13	NAS1352N08-8	1.1÷ 0.17		2.3÷ 2					
	LP14	NAS1352N08-8	1.1÷ 0.17		2.3÷ 2					
	LP15	NAS1352N08-8	1.1÷ 0.17		2.3÷ 2					
	LP16	NAS1352N08-8	1.1÷ 0.17		2.3÷ 2					
	LP17	NAS1352N08-8	1.1÷ 0.17		2.3÷ 2					
	LP18	NAS1352N08-8	1.1÷ 0.17		2.3÷ 2					

Questo documento contiene informazioni di proprietà di CARLO GAVAZZI SPACE SpA. Tutti i diritti sono riservati.
All information contained in this document are property of CARLO GAVAZZI SPACE SpA. All right reserved.

part	Screw ID	BOLT size	Running torque limits [Nm]	Meas. Running torque [Nm]	Required Seating Torque limits [Nm]	Final Integ.				remarks
						Final torque [Nm] = Meas. Running torque + Seating Torque	Date	Signature	PA. Signature	
LEFT PANEL	LP19	NAS1352N08-8	1.1÷ 0.17		2.3÷ 2					
	LP20	NAS1352N08-8	1.1÷ 0.17		2.3÷ 2					
	LP21	NAS1351N3-10	2÷ 0.2		3.6÷3.4					
	LP22	NAS1351N3-10	2÷ 0.2		3.6÷3.4					
	LP23	NAS1351N3-10	2÷ 0.2		3.6÷3.4					
	LP24	NAS1351N3-10	2÷ 0.2		3.6÷3.4					
	LP25	NAS1351N3-10	2÷ 0.2		3.6÷3.4					

Questo documento contiene informazioni di proprietà di CARLO GAVAZZI SPACE SpA. Tutti i diritti sono riservati.
All information contained in this document are property of CARLO GAVAZZI SPACE SpA. All right reserved.

part	Screw ID	BOLT size	Running torque limits [Nm]	Meas. Running torque [Nm]	Required Seating Torque limits [Nm]	Final Integ.				remarks
						Final torque [Nm] = Meas. Running torque + Seating Torque	Date	Signature	PA. Signature	
STIFFENER RIGHT	ST1L	NAS1352N08-8	1.1÷ 0.17		2.3÷ 2					
	ST2L	NAS1352N08-8	1.1÷ 0.17		2.3÷ 2					
	ST3L	NAS1352N08-8	1.1÷ 0.17		2.3÷ 2					
	ST4L	NAS1352N08-8	1.1÷ 0.17		2.3÷ 2					
	ST5L	NAS1352N08-8	1.1÷ 0.17		2.3÷ 2					
	ST6L	NAS1352N08-8	1.1÷ 0.17		2.3÷ 2					
STIFFENER LEFT	ST1R	NAS1352N08-8	1.1÷ 0.17		2.3÷ 2					
	ST2R	NAS1352N08-8	1.1÷ 0.17		2.3÷ 2					
	ST3R	NAS1352N08-8	1.1÷ 0.17		2.3÷ 2					
	ST4R	NAS1352N08-8	1.1÷ 0.17		2.3÷ 2					
	ST5R	NAS1352N08-8	1.1÷ 0.17		2.3÷ 2					
	ST6R	NAS1352N08-8	1.1÷ 0.17		2.3÷ 2					
CONN SPACER 1	CS1-1	MS244671-14	1.1÷ 0.17		1.2					
	CS1-2	NAS1352N08-8	1.1÷ 0.17		2.3÷ 2					
CONN SPACER 2	CS2-1	MS244671-14	1.1÷ 0.17		1.2					
	CS2-2	NAS1352N08-8	1.1÷ 0.17		2.3÷ 2					

Questo documento contiene informazioni di proprietà di CARLO GAVAZZI SPACE SpA. Tutti i diritti sono riservati.
All information contained in this document are property of CARLO GAVAZZI SPACE SpA. All right reserved.

part	Screw ID	BOLT size	Running torque limits [Nm]	Meas. Running torque [Nm]	Required Seating Torque limits [Nm]	Final Integ.				remarks
						Final torque [Nm] = Meas. Running torque + Seating Torque	Date	Signature	PA. Signature	
BASEPLATE	BP1	NAS1351N3-8	2÷ 0.2		3.6÷3.4					
	BP2	NAS1351N3-8	2÷ 0.2		3.6÷3.4					
	BP3	NAS1351N3-8	2÷ 0.2		3.6÷3.4					
	BP4	NAS1351N3-8	2÷ 0.2		3.6÷3.4					
	BP5	NAS1351N3-8	2÷ 0.2		3.6÷3.4					
	BP6	NAS1351N3-8	2÷ 0.2		3.6÷3.4					
	BP7	NAS1351N3-8	2÷ 0.2		3.6÷3.4					
	BP8	NAS1351N3-8	2÷ 0.2		3.6÷3.4					
	BP9	NAS1351N3-8	2÷ 0.2		3.6÷3.4					
	BP10	NAS1351N3-8	2÷ 0.2		3.6÷3.4					
	BP11	NAS1351N3-8	2÷ 0.2		3.6÷3.4					
	BP12	NAS1351N3-8	2÷ 0.2		3.6÷3.4					
	BSF1	NAS1352N08-8	1.1÷ 0.17		2.3÷ 2					
	BSF2	NAS1352N08-8	1.1÷ 0.17		2.3÷ 2					
	BSF3	NAS1352N08-8	1.1÷ 0.17		2.3÷ 2					
	BSF4	NAS1352N08-8	1.1÷ 0.17		2.3÷ 2					

Questo documento contiene informazioni di proprietà di CARLO GAVAZZI SPACE SpA. Tutti i diritti sono riservati.
All information contained in this document are property of CARLO GAVAZZI SPACE SpA. All right reserved.

part	Screw ID	BOLT size	Running torque limits [Nm]	Meas. Running torque [Nm]	Required Seating Torque limits [Nm]	Final Integ.				remarks
						Final torque [Nm] = Meas. Running torque + Seating Torque	Date	Signature	PA. Signature	
BASEPLATE	BSR1	NAS1352N08-8	1.1÷ 0.17		2.3÷ 2					
	BSR2	NAS1352N08-8	1.1÷ 0.17		2.3÷ 2					
	BSR3	NAS1352N08-8	1.1÷ 0.17		2.3÷ 2					
	BSR4	NAS1352N08-8	1.1÷ 0.17		2.3÷ 2					
	BSR5	NAS1352N08-8	1.1÷ 0.17		2.3÷ 2					
	BSR6	NAS1352N08-8	1.1÷ 0.17		2.3÷ 2					
	BSR7	NAS1352N08-8	1.1÷ 0.17		2.3÷ 2					
	BSR8	NAS1352N08-8	1.1÷ 0.17		2.3÷ 2					
	BSR9	NAS1352N08-8	1.1÷ 0.17		2.3÷ 2					
	BSR10	NAS1352N08-8	1.1÷ 0.17		2.3÷ 2					
	BSR11	NAS1352N08-8	1.1÷ 0.17		2.3÷ 2					
	BSR12	NAS1352N08-8	1.1÷ 0.17		2.3÷ 2					

Questo documento contiene informazioni di proprietà di CARLO GAVAZZI SPACE SpA. Tutti i diritti sono riservati.
All information contained in this document are property of CARLO GAVAZZI SPACE SpA. All right reserved.

part	Screw ID	BOLT size	Running torque limits [Nm]	Meas. Running torque [Nm]	Required Seating Torque limits [Nm]	Final Integ.				remarks
						Final torque [Nm] = Meas. Running torque + Seating Torque	Date	Signature	PA. Signature	
REAR PANEL	RP1	NAS1352N08-8	1.1÷ 0.17		2.3÷ 2					
	RP2	NAS1352N08-8	1.1÷ 0.17		2.3÷ 2					
	RP3	NAS1352N08-8	1.1÷ 0.17		2.3÷ 2					
	RP4	NAS1352N08-8	1.1÷ 0.17		2.3÷ 2					
	RP5	NAS1352N08-8	1.1÷ 0.17		2.3÷ 2					
	RP6	NAS1352N08-8	1.1÷ 0.17		2.3÷ 2					
	RP7	NAS1352N08-8	1.1÷ 0.17		2.3÷ 2					
	RP8	NAS1352N08-8	1.1÷ 0.17		2.3÷ 2					
	RP9	NAS1352N08-8	1.1÷ 0.17		2.3÷ 2					
	RP10	NAS1352N08-8	1.1÷ 0.17		2.3÷ 2					
	RP11	NAS1352N08-8	1.1÷ 0.17		2.3÷ 2					
	RP12	NAS1352N08-8	1.1÷ 0.17		2.3÷ 2					

Questo documento contiene informazioni di proprietà di CARLO GAVAZZI SPACE SpA. Tutti i diritti sono riservati.
All information contained in this document are property of CARLO GAVAZZI SPACE SpA. All right reserved.

part	Screw ID	BOLT size	Running torque limits [Nm]	Meas. Running torque [Nm]	Required Seating Torque limits [Nm]	Final Integ.				remarks
						Final torque [Nm] = Meas. Running torque + Seating Torque	Date	Signature	PA. Signature	
TOP COVER FRONT	TP1	NAS1352N08-8	1.1÷ 0.17		2.3÷ 2					
	TP2	NAS1352N08-8	1.1÷ 0.17		2.3÷ 2					
	TP3	NAS1352N08-8	1.1÷ 0.17		2.3÷ 2					
	TP4	NAS1352N08-8	1.1÷ 0.17		2.3÷ 2					

Questo documento contiene informazioni di proprietà di CARLO GAVAZZI SPACE SpA. Tutti i diritti sono riservati.
All information contained in this document are property of CARLO GAVAZZI SPACE SpA. All right reserved.