ORIGINALE ARCHIVIO

CARLO GAVAZZI

CARLO GAVAZZI SPACE SpA

AMS02-PDS

Tipo Doc.: *Doc.Type:*	PROCEDURE			N° DRD: *DRD N°:*	DEL 096 - 097
N° Doc.: *Doc. N°:*	**PDS-PR-CGS-016**	Ediz.: *Issue:* **2**	Data: *Date:* **24/07/2009**	Pagina *Page* **1**	Di *Of* **135**
Titolo : *Title :*	PDS PFM EMC PRECOMPLIANCE AND REDUCED RADIATED TEST PROCEDURE				

	Nome & Funzione *Name & Function*	Firma *Signature*	Data *Date*
Preparato da: *Prepared by:*	Alia S. (DT/EE)		30-7-09
Approvato da: *Approved by:*	Grossi R. (DT/EE) Alia S. (DT/EE) Francini E. (PA/QA) Cinquepalmi C. (PA/CC)		30/7/09 30-7-09 30/07/09 30/07/09
Applicazione autorizzata da: *Application authorized by:*	Olivier M. (PM)		30/07/09
Customer / Higher Level Contractor			
Accettato da: *Accepted by:*	ASI		
Approvato da: *Approved by:*	ASI		

LISTA DI DISTRIBUZIONE *DISTRIBUTION LIST*	N	A	I
Interna / Internal			
Olivier M. (PM)	1	X	
Alia S.(DT/EE)	1	X	
Francini E. (PA/QA)	1		X
Esterna / *External*			
Russo E. (ASI)	1		X

N=Numero di copie A=Applicazione I=Informazione
N=Number of copy A=Application I=Information

Gestione documenti: *Data Management:*	Firma / *Signature*	Data / *Date* 30/07/09
File: PDS-PR-CGS-016 Is2.doc		

Questo documento contiene informazioni di proprietà di CARLO GAVAZZI SPACE SpA: Tutti i diritti sono riservati
All information contained in this document are property of CARLO GAVAZZI SPACE SpA. All right reserved.

REGISTRAZIONE DELLE MODIFICHE / *CHANGE RECORD*

EDIZIONE *ISSUE*	DATA *DATE*	AUTORIZZAZIONE *CHANGE AUTHORITY*	OGGETTO DELLA MODIFICA E SEZIONI AFFETTE *REASON FOR CHANGE AND AFFECTED SECTIONS*
1	13/03/2009	-	First Issue
2	24/07/2009	Engineering update And TRR PDS opening DC-IPC-2009-081 Dated 04-05/06/2009	Pag 7 Added applicable document: o *PDS-PL-CGS-003* *AMS02 PDS Design Development And Qualification Plan* o SSP 57003 Rev B *Attached Payload Interface requirements Document. International Space Station Program* Pag all Updated the input current expected value Pag 24 Updated Table 6-1: requirement cross reference with respect to SSP 57003 requirements

Questo documento contiene informazioni di proprietà di CARLO GAVAZZI SPACE SpA. Tutti i diritti sono riservati.
All information contained in this document are property of CARLO GAVAZZI SPACE SpA. All right reserved.

LISTA DELLE PAGINE VALIDE / *LIST OF VALID PAGES*

PAGINA *PAGE*	EDIZIONE *ISSUE*	PAGINA *PAGE*	EDIZIONE *ISSUE*	PAGINA *PAGE*	EDIZIONE *ISSUE*	PAGINA *PAGE*	EDIZIONE *ISSUE*	PAGINA *PAGE*	EDIZIONE *ISSUE*
1 - 135	2								

Questo documento contiene informazioni di proprietà di CARLO GAVAZZI SPACE SpA. Tutti i diritti sono riservati.
All information contained in this document are property of CARLO GAVAZZI SPACE SpA. All right reserved.

TABLE OF CONTENT

1. SCOPE 7

2. DOCUMENTS 7

2.1 APPLICABLE DOCUMENTS 7
2.2 REFERENCE DOCUMENTS 7

3. ACRONYMS 7

4. PARTICIPANTS REQUIRED 8

4.1 GENERAL 8
4.2 RESPONSIBILITY 8
4.3 QA WITNESS OF TEST AND SIGN-OFF 8
4.4 NON CONFORMANCE AND FAILURES 8
4.5 CALIBRATION REQUIREMENTS 8

5. TEST ARTICLE 9

6. TEST CONFIGURATION 9

6.1 TEST SETUP 10
6.2 GROUNDING 23
6.2.1 GROUNDING OF THE UNIT UNDER TEST 23
6.2.2 GROUNDING OF THE TEST INSTRUMENTATION 23
6.3 AMBIENT NOISE 23
6.4 REQUIREMENTS CROSS REFERENCE 24
6.5 PDS TEST EQUIPMENT 25
6.6 SPECTRUM ANALYZER 26
6.7 10 μF CAPACITOR AND LISN 27
6.8 CURRENT PROBE 29
6.9 TEST HARNESS 29
6.10 TEST ANTENNAS 30
6.11 MEASUREMT ANTENNAS POSITION 30
6.11.1 LOCATION 30
6.11.2 LINEARLY POLARIZED ANTENNAS 30
6.12 TEST INSTRUMENT LIST 31

7. TEST CONDITIONS 32

8. TEST PROCEDURE VARIATION SHEET 33

9. TEST DATA SHEETS 35

9.1 DATA SHEETS FILLING UP 35

10. PDS EMC PRECOMPLIANCE TEST PROCEDURE 36

10.1 BONDING 36
10.1.1 B.01: UNIT BONDING STRUCTURE VERIFICATION 36
10.1.2 B.02: TEST SITE BONDING VERIFICATION 39
10.2 CONDUCTED EMISSIONS ON A SECTION 41
10.2.1 EC-01: LOAD NB CURRENT EMISSION 41
10.2.2 EC-02: RIPPLE VOLTAGE AND NOISE 47
10.2.3 EC-03: LOAD TRANSIENT 50
10.2.4 EC-04: PEAK AND SURGE CURRENT 53
10.3 CONDUCTED EMISSIONS ON B SECTION 55
10.3.1 EC-01: LOAD NB CURRENT EMISSION 55

Questo documento contiene informazioni di proprietà di CARLO GAVAZZI SPACE SpA. Tutti i diritti sono riservati.
All information contained in this document are property of CARLO GAVAZZI SPACE SpA. All right reserved.

10.3.2 EC-02: RIPPLE VOLTAGE AND NOISE 58
10.3.3 EC-03: LOAD TRANSIENT 61
10.3.4 EC-04: PEAK AND SURGE CURRENT 63
10.4 SECTION "A" CONDUCTED SUSCEPTIBILITY 65
10.4.1 SC-01: SINE WAVE INJECTION ON INPUT DC POWER SUPPLY 65
10.4.2 SC-02: INPUT IMPEDANCE 70
10.4.3 SC-03: VOLTAGE SPIKE TRANSIENTS INJECTION ON DC POWER LINES 74
10.4.4 SC-04: NORMAL VOLTAGE TRANSIENT INJECTION ON DC POWER LINES 82
10.4.5 SC-05: ABNORMAL VOLTAGE TRANSIENT 86
10.4.6 LARGE SIGNAL STABILITY 90
10.5 SECTION "B" CONDUCTED SUSCEPTIBILITY 94
10.5.1 SC-01: SINE WAVE INJECTION ON INPUT DC POWER SUPPLY 94
10.5.2 SC-02: INPUT IMPEDANCE 98
10.5.3 SC-03: VOLTAGE SPIKE TRANSIENTS INJECTION ON DC POWER LINES 100
10.5.4 SC-04: NORMAL VOLTAGE TRANSIENT INJECTION ON DC POWER LINES 107
10.5.5 SC-05: ABNORMAL VOLTAGE TRANSIENT 110
10.5.6 LARGE SIGNAL STABILITY 113
10.6 REVERSE CURRENT 116
10.7 SR-A: ARC DISCHARGE SUSCEPTIBILITY 121
10.8 RE02, SECTION "A" RADIATED EMISSIONS 125
10.9 RE02, SECTION "B" RADIATED EMISSIONS 128
10.10 RS03 SECTION "A" RADIATED SUSCEPTIBILITY 130
10.11 RS03 SECTION "B" RADIATED SUSCEPTIBILITY 133

11. CONCLUSIONS 135

LIST OF FIGURES

Figure 6-1: General EMC Test Set-up 10
Figure 6-2: Conducted Emission Frequency Domain Test Set-up 11
Figure 6-3: Conducted Emission Current Time Domain (Inrush Current) Test Set-up 12
Figure 6-4: Conducted Emission Load Broad Band Voltage Emission / Load Transient Test Set-up 13
Figure 6-5: Input Sine Wave Injection (30Hz ÷ 50kHz) Test Set-up (Transformer Coupling) 14
Figure 6-6: Input Sine Wave Injection (50kHz ÷ 50MHz) Test Set-up (Capacitor Coupling) 15
Figure 6-7: Transient Voltage Spikes Conducted Susceptibility Test Set-up 16
Figure 6-8: Normal & Abnormal Voltage Transients and Large Signal Stability Test Set-up 17
Figure 6-9: Output Sine Wave Injection (30Hz ÷ 50kHz) Test Set-up (Transformer Coupling) 18
Figure 6-10: Output Sine Wave Injection (50kHz ÷ 50MHz) Test Set-up (Capacitor Coupling) 19
Figure 6-11: Radiated emissions setup 20
Figure 6-12: Radiated susceptibility setup 21
Figure 6-13: Reverse current 22
Figure 6-14: PDS Test Equipment 25
Figure 6-15: 10μF Capacitor Insertion Loss 27
Figure 6-16: LISN Electrical Schematic 28
Figure 6-17: LISN Impedance 28
Figure 6-18: Power Cable For Conducted Emission and Susceptibility Tests 29
Figure 10-1: Test Site Bonding Verification Set-up 38
Figure 10-2: Test Site Bonding Verification Set-up 40
Figure 10-3: Transients Emission Limit 52
Figure 10-4: Sine Wave Injection Mask 69
Figure 10-5: Load Impedance Magnitude Limits 72
Figure 10-6: Load Impedance Phase Limits 73
Figure 10-7: Transient Injection Mask 81
Figure 10-8: Normal Transient Mask 85
Figure 10-9: Abnormal Voltage Transient Mask 89
Figure 10-10: Pulse applied to the power input of the integrated external payload load 93

Questo documento contiene informazioni di proprietà di CARLO GAVAZZI SPACE SpA. Tutti i diritti sono riservati.
All information contained in this document are property of CARLO GAVAZZI SPACE SpA. All right reserved.

LIST OF TABLES

Table 6-1: Requirements Cross Reference 24
Table 6-2: Conducted Emission Resolution Bandwidth 26
Table 6-3: LISN or 10uF Capacitor use during EMC Tests 27
Table 6-4: Recommended test antenna characteristics 30
Table 6-5: Instruments List 31
Table 10-1: Nominal Load Table 46
Table 10-2 : Field emissions limits 127
Table 10-3: RS 03 Emission limits 132

Questo documento contiene informazioni di proprietà di CARLO GAVAZZI SPACE SpA. Tutti i diritti sono riservati.
All information contained in this document are property of CARLO GAVAZZI SPACE SpA. All right reserved.

1. SCOPE

This document provides the run test procedure applicable to the EMC tests of the AMS02-PDS:

Model: PFM
Part number: 10-AMS02PDS-000.00
Serial number: FM 01

The tests to be performed according to this procedure are to demonstrate the compliance of the above item to the requirements specified in the applicable documents as part of the overall verification program. The test results shall be collected in a Test Report.

The document merges the following contract deliverables:

- DEL 096
- DEL 097

2. DOCUMENTS

2.1 APPLICABLE DOCUMENTS

AD	Doc. Number	Issue / Date	Rev	Title / Applicability	Remarks
1	*AMS-RQ-CGS-002*	*1 / April 2007*	*N.A.*	*PDS Specification*	
2	*PDS-PL-CGS-003*	*1 / 11-05-2009*	*N.A.*	*AMS02 PDS DESIGN DEVELOPMENT AND QUALIFICATION PLAN*	
3	*SSP 57003*	*June 17, 2003*	*B*	*Attached Payload Interface Requirements Document. International Space Station Program*	

2.2 REFERENCE DOCUMENTS

RD	Doc. Number	Issue / Date	Rev	Title / Applicability	Remarks
1	*10-AMS02PDS-000.00*	*28/07/2008*	*/*	*AMS02 Power Distribution System Assembly*	
2	*10-AMS02PDS-000.01*	*28/07/2008*	*/*	*AMS02 Power Distribution System Assembly Parts List*	
3	*10-AMS02PDS-000.02*	*08/06/2009*	*A*	*AMS02 Power Distribution System ICD*	

3. ACRONYMS

APM Attached Payload Model
C.I. Configuration Item. Also called Part Number (P/N)
CGS Carlo Gavazzi Space
CE Conducted Emissions
CS Conducted Susceptibility

Questo documento contiene informazioni di proprietà di CARLO GAVAZZI SPACE SpA. Tutti i diritti sono riservati.
All information contained in this document are property of CARLO GAVAZZI SPACE SpA. All right reserved.

FM	Flight Model
NA	Not Applicable
P/N	Part Number. Also called Configuration Item C.I.
PA	Product Assurance
PDS	Power Distribution System
PFM	Proto Flight Model
PVS	Procedure Variation Sheet
RE	Radiated Emissions
RS	Radiated Susceptibility
QA	Quality Assurance
S/N	Serial Number
TE	Test Equipment
UUT	Unit Under Test

4. PARTICIPANTS REQUIRED

4.1 GENERAL

All test will be performed under QA surveillance in accordance with and following detailed procedure of applicable PA Plan.

4.2 RESPONSIBILITY

The technical responsibility for testing and test results is up to the Engineering Department.

QA is responsible for ensuring that all the agreed procedures are carefully observed, that test equipment and instrumentation used during testing are calibrated and within validity date, that the test data sheets are recorded in the Test Report and signed by the operators and QA witnesses, that all non conforming condition and test results are properly documented and notified to the Prime Contractor and that all requirements of applicable PA Plan, Specification and Statement of Work pertaining to the acceptance tests are fully satisfied.

4.3 QA WITNESS OF TEST AND SIGN-OFF

QA inspector, or its delegate, shall witness the tests described in this procedure in accordance to the requirement specified in the applicable PA Plans.

4.4 NON CONFORMANCE AND FAILURES

Any malfunction/defect which occurred during the test will be processed along the Non Conformance Procedure described in the applicable PA Plans.

4.5 CALIBRATION REQUIREMENTS

All instruments used for testing shall be calibrated.

Evidence of certification shall be provided by a label attached to the instruments itself, showing the calibration date, the expiring date and the signature of the operator.

Questo documento contiene informazioni di proprietà di CARLO GAVAZZI SPACE SpA. Tutti i diritti sono riservati.
All information contained in this document are property of CARLO GAVAZZI SPACE SpA. All right reserved.

5. TEST ARTICLE

The test article consists of AMS02-PDS PFM Unit (see Para. 1 for Part Number and Serial Number)

Before starting the test, model, P/N and S/N of the test article to be tested shall be recorded on the step-by-step procedure sheets under the table cell "UNIT UNDER TEST".

6. TEST CONFIGURATION

The following general requirements shall be taken into consideration:

- During EMC tests the UUT shall be placed on and grounded to a copper test table.
- Power cable from LISN to UUT during conducted tests shall be 2 meter long.
- All cables shall be placed 5 cm above the ground plane using insulated stand-off's.
- Power and signal cables shall be taken 2 cm far one to each other.
- Power cables shall be routed 10 cm from the edge of the copper test table.
- UUT shall be operated by UUT TE and as prescribed in the User Manual
- UUT TE shall be used for providing, where applicable, on/off-line requirements verification.
- To avoid high frequency ground loops, test receiver for test above 30MHz shall be placed outside the test chamber. All accessory equipment shall be checked to ensure that they will not affect measurement integrity.
- During emission tests the indicated levels shall be never exceeded when the equipment power supply and operations are set to the conditions yielding the maximum emissions.
- During susceptibility tests the equipment operation and test set-up shall be such that the susceptibility is maximized.
  If susceptibility is noted, the level of the disturbance shall be decreased until full performances of the UUT are reached.
  Investigation shall be performed to verify which is the most interfering signal (in terms of modulation, repetition rate, sweep rate, etc...) for the UUT.
  The threshold level and each pertinent data shall be recorded.

Questo documento contiene informazioni di proprietà di CARLO GAVAZZI SPACE SpA. Tutti i diritti sono riservati.
All information contained in this document are property of CARLO GAVAZZI SPACE SpA. All right reserved.

6.1 TEST SETUP

This paragraph contains the test set up to be used during the EMC tests.

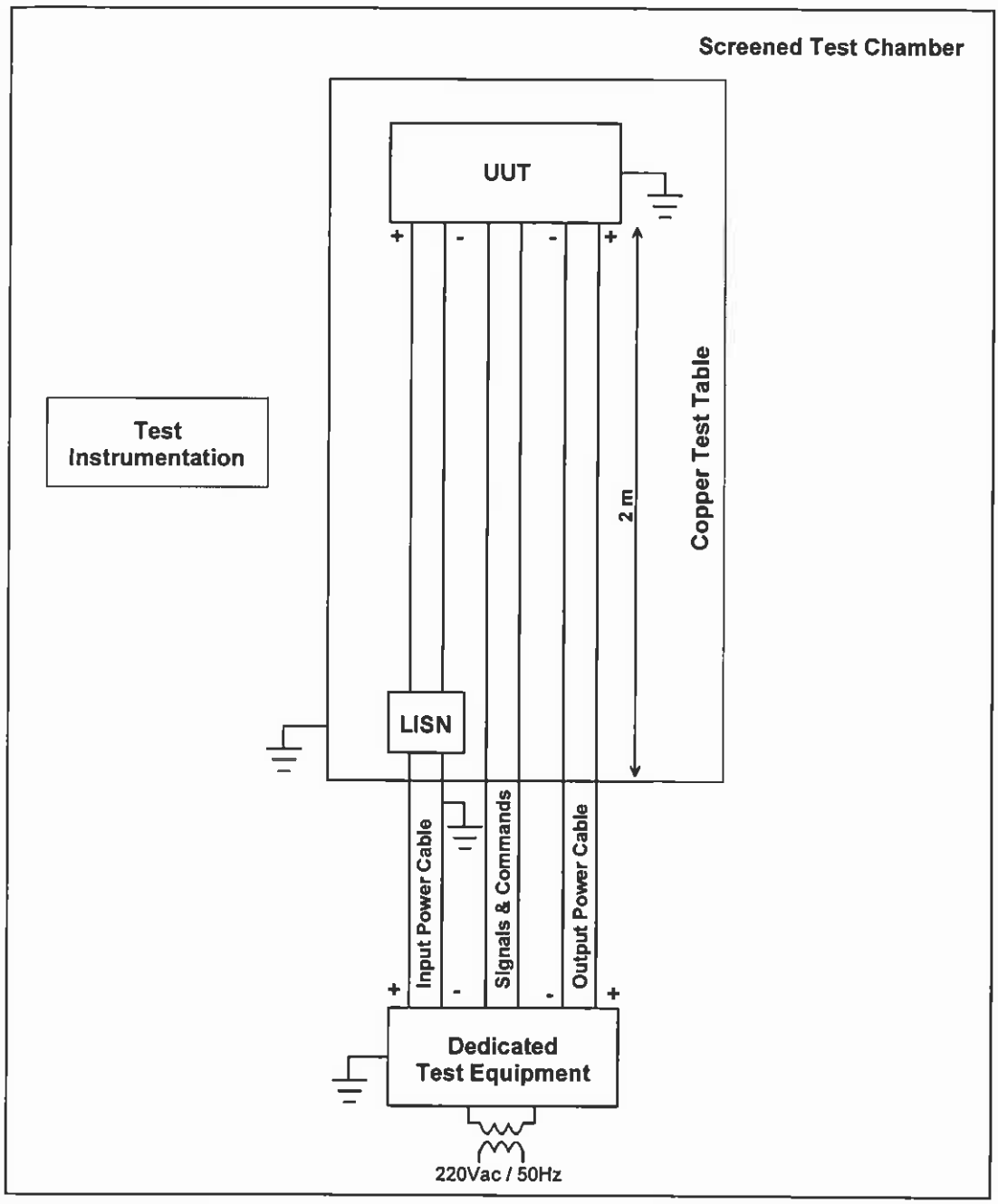

Figure 6-1: General EMC Test Set-up

Questo documento contiene informazioni di proprietà di CARLO GAVAZZI SPACE SpA. Tutti i diritti sono riservati.
All information contained in this document are property of CARLO GAVAZZI SPACE SpA. All right reserved.

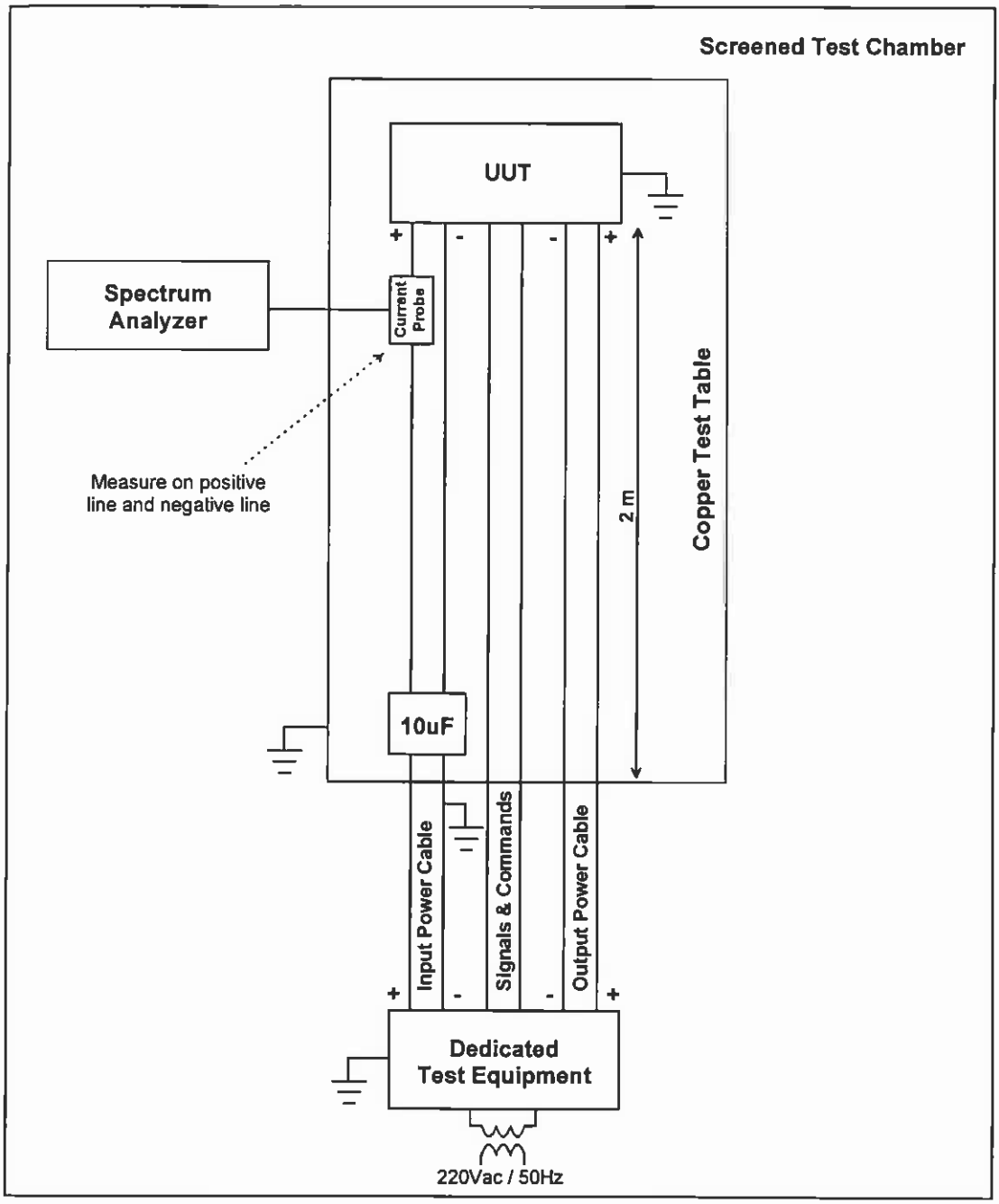

Figure 6-2: Conducted Emission Frequency Domain Test Set-up

Questo documento contiene informazioni di proprietà di CARLO GAVAZZI SPACE SpA. Tutti i diritti sono riservati.
All information contained in this document are property of CARLO GAVAZZI SPACE SpA. All right reserved.

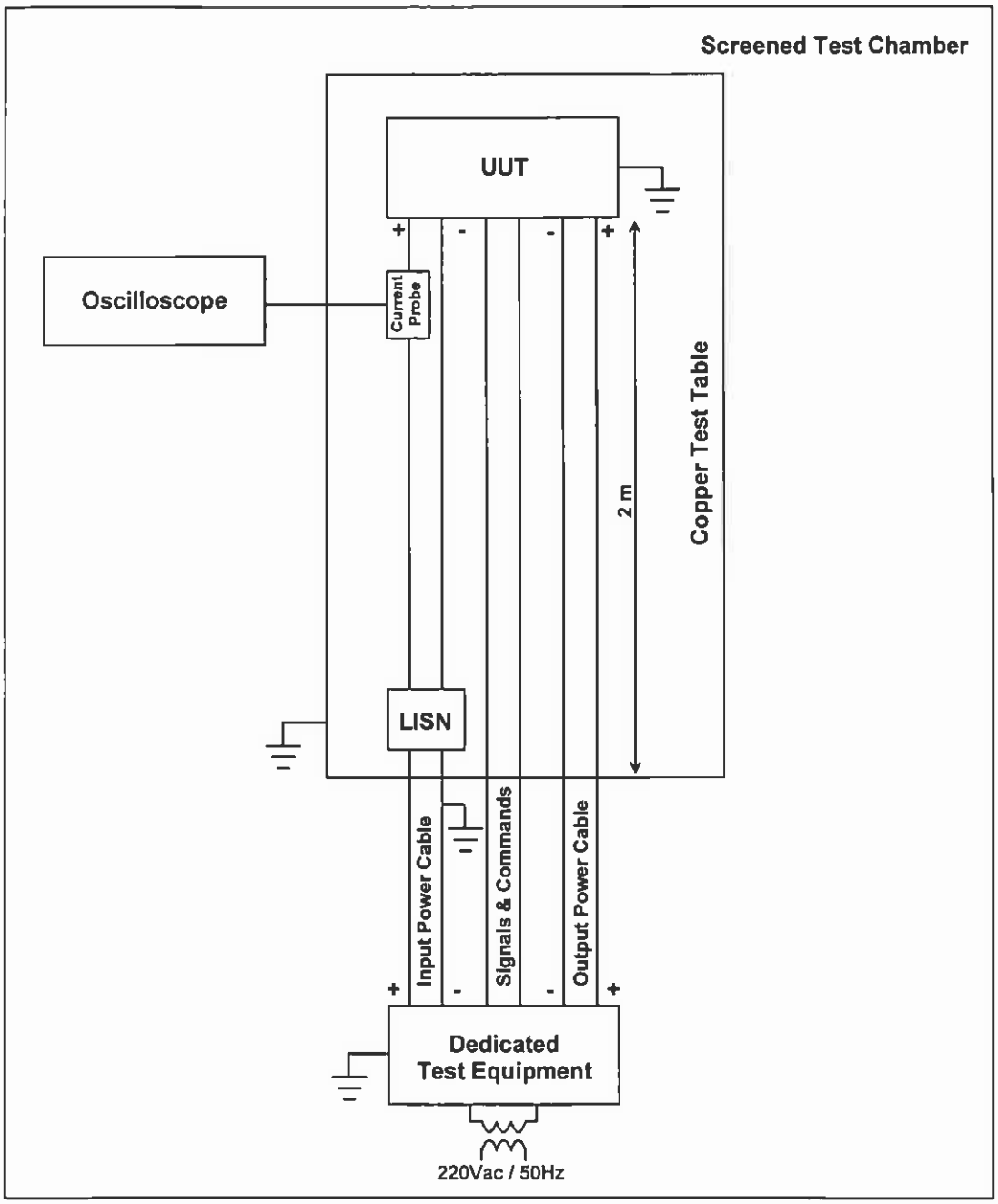

Figure 6-3: Conducted Emission Current Time Domain (Inrush Current) Test Set-up

Questo documento contiene informazioni di proprietà di CARLO GAVAZZI SPACE SpA. Tutti i diritti sono riservati.
All information contained in this document are property of CARLO GAVAZZI SPACE SpA. All right reserved.

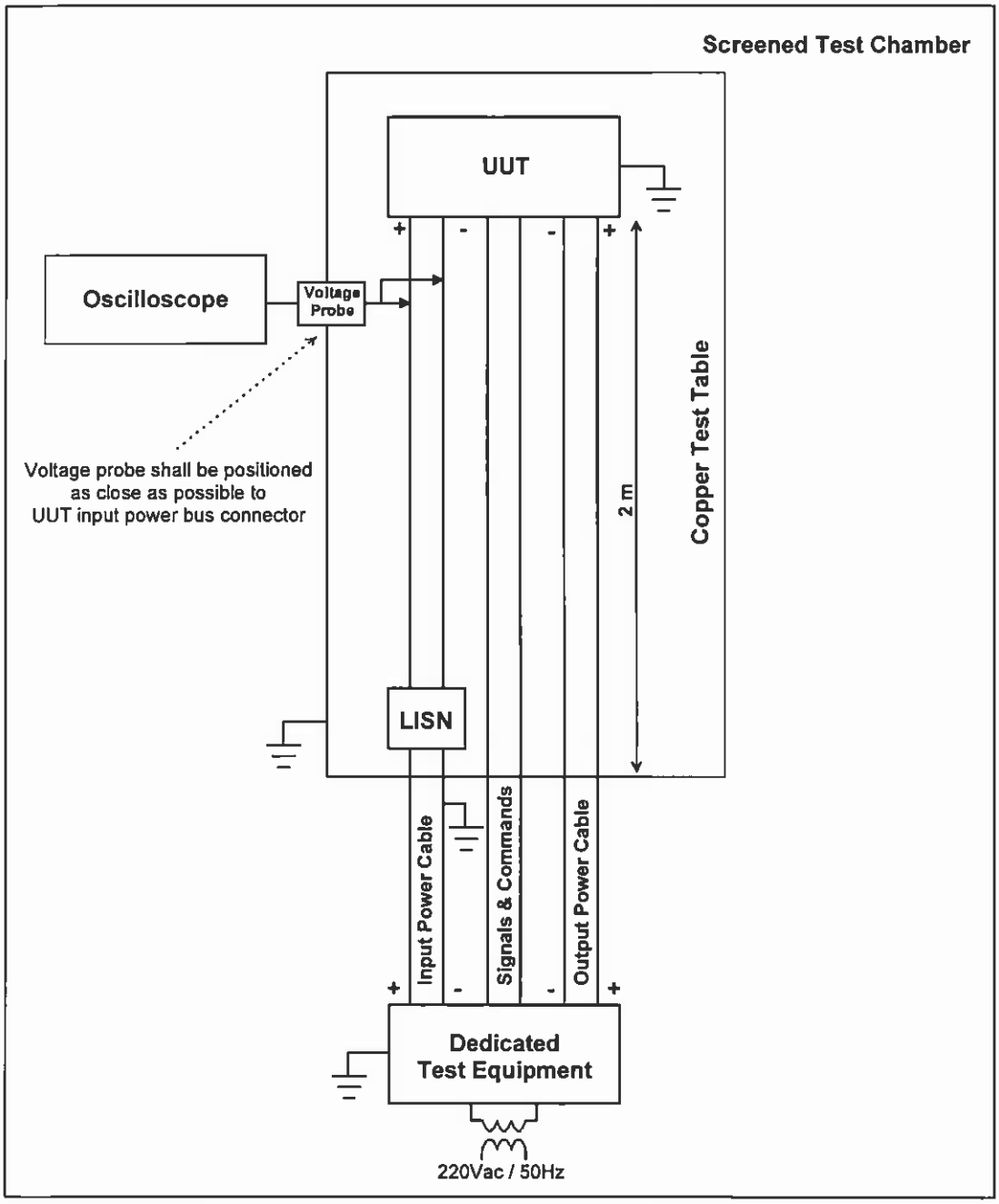

Figure 6-4: Conducted Emission Load Broad Band Voltage Emission / Load Transient Test Set-up

Questo documento contiene informazioni di proprietà di CARLO GAVAZZI SPACE SpA. Tutti i diritti sono riservati.
All information contained in this document are property of CARLO GAVAZZI SPACE SpA. All right reserved.

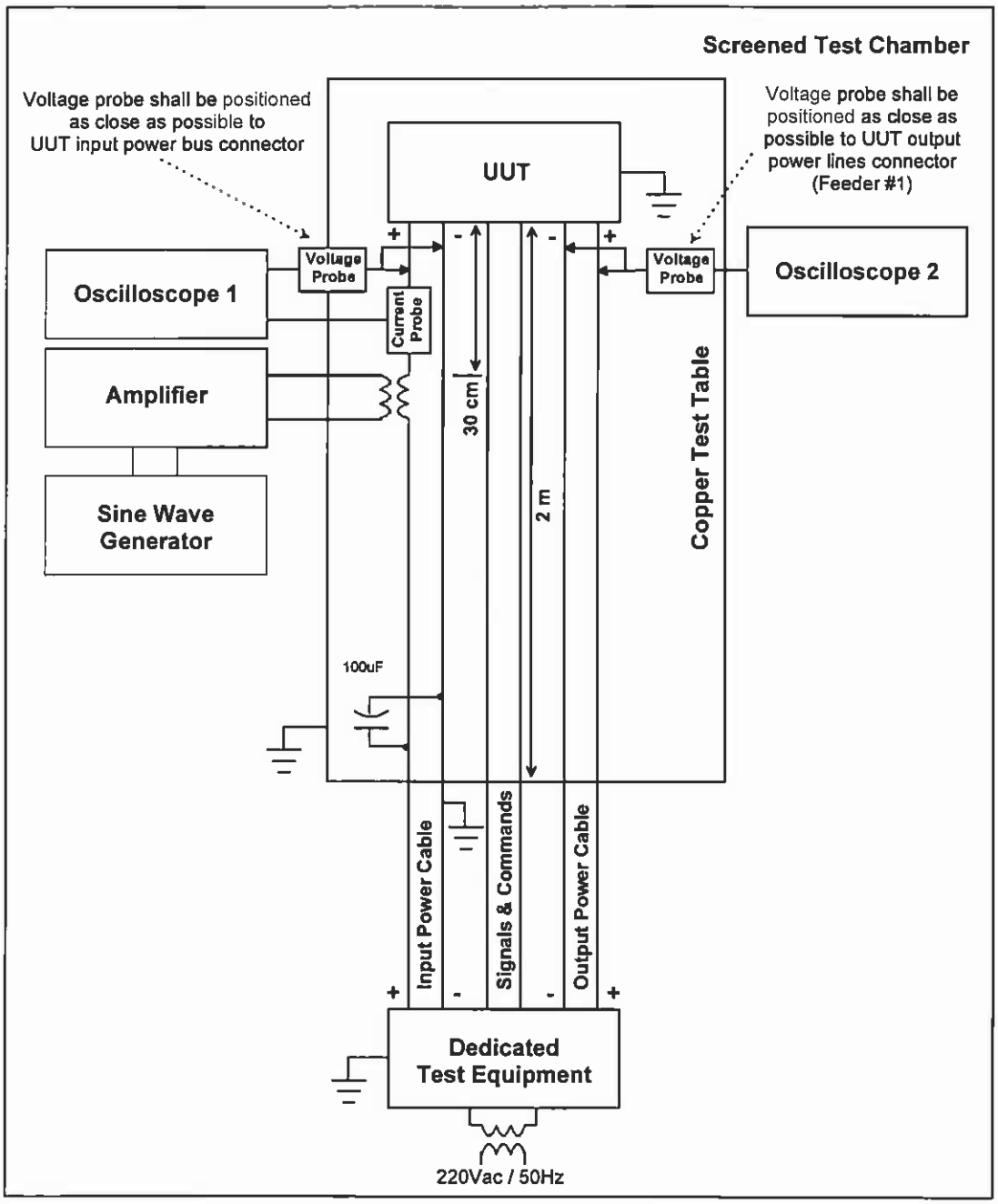

Figure 6-5: Input Sine Wave Injection (30Hz + 50kHz) Test Set-up (Transformer Coupling)

The 100 microfarad capacitor may be required as a shunt to dc power source impedance if difficulty is encountered in obtaining the required test voltage.

Questo documento contiene informazioni di proprietà di CARLO GAVAZZI SPACE SpA. Tutti i diritti sono riservati.
All information contained in this document are property of CARLO GAVAZZI SPACE SpA. All right reserved.

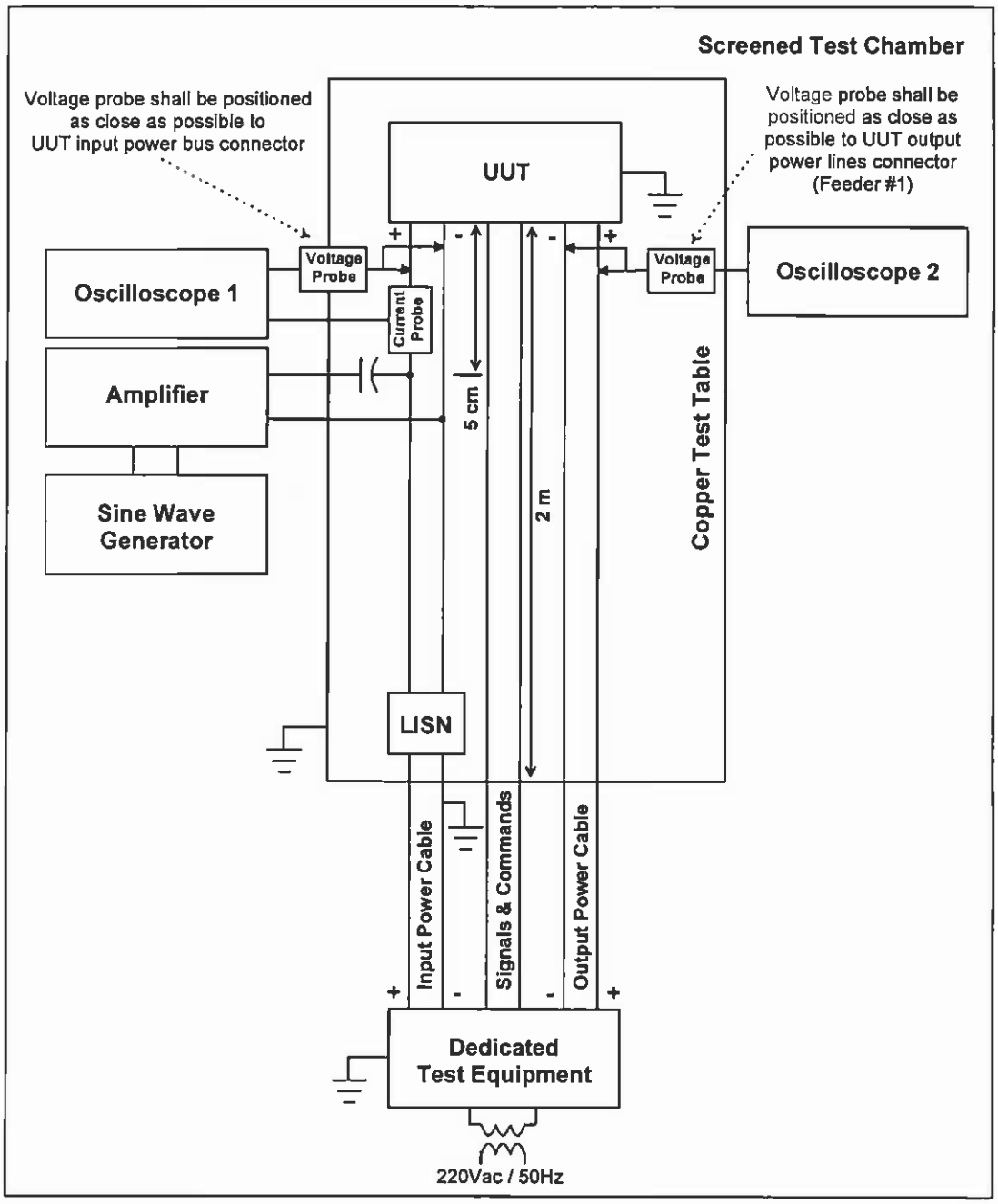

Figure 6-6: Input Sine Wave Injection (50kHz ÷ 50MHz) Test Set-up (Capacitor Coupling)

Questo documento contiene informazioni di proprietà di CARLO GAVAZZI SPACE SpA. Tutti i diritti sono riservati.
All information contained in this document are property of CARLO GAVAZZI SPACE SpA. All right reserved.

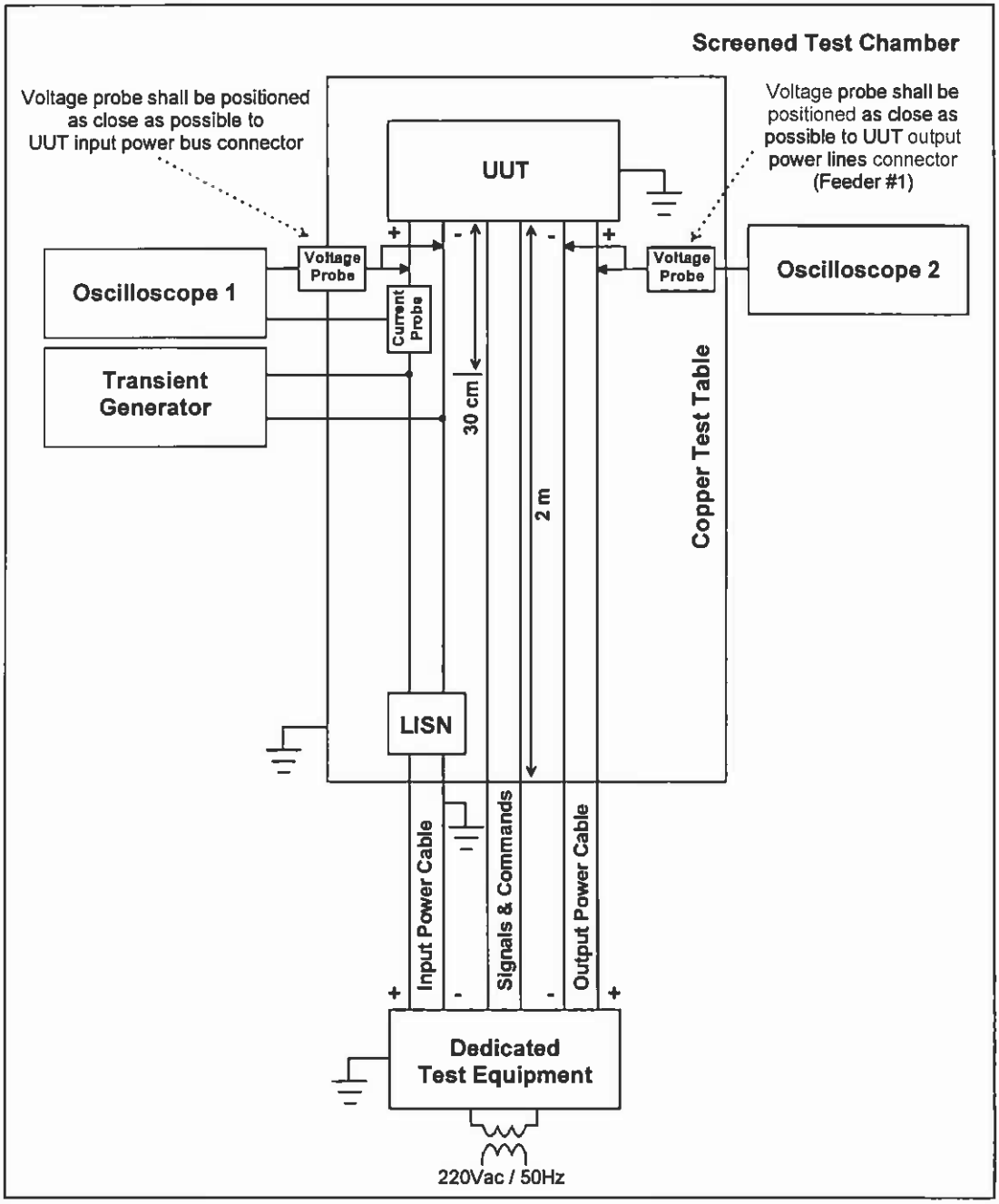

Figure 6-7: Transient Voltage Spikes Conducted Susceptibility Test Set-up

Questo documento contiene informazioni di proprietà di CARLO GAVAZZI SPACE SpA. Tutti i diritti sono riservati.
All information contained in this document are property of CARLO GAVAZZI SPACE SpA. All right reserved.

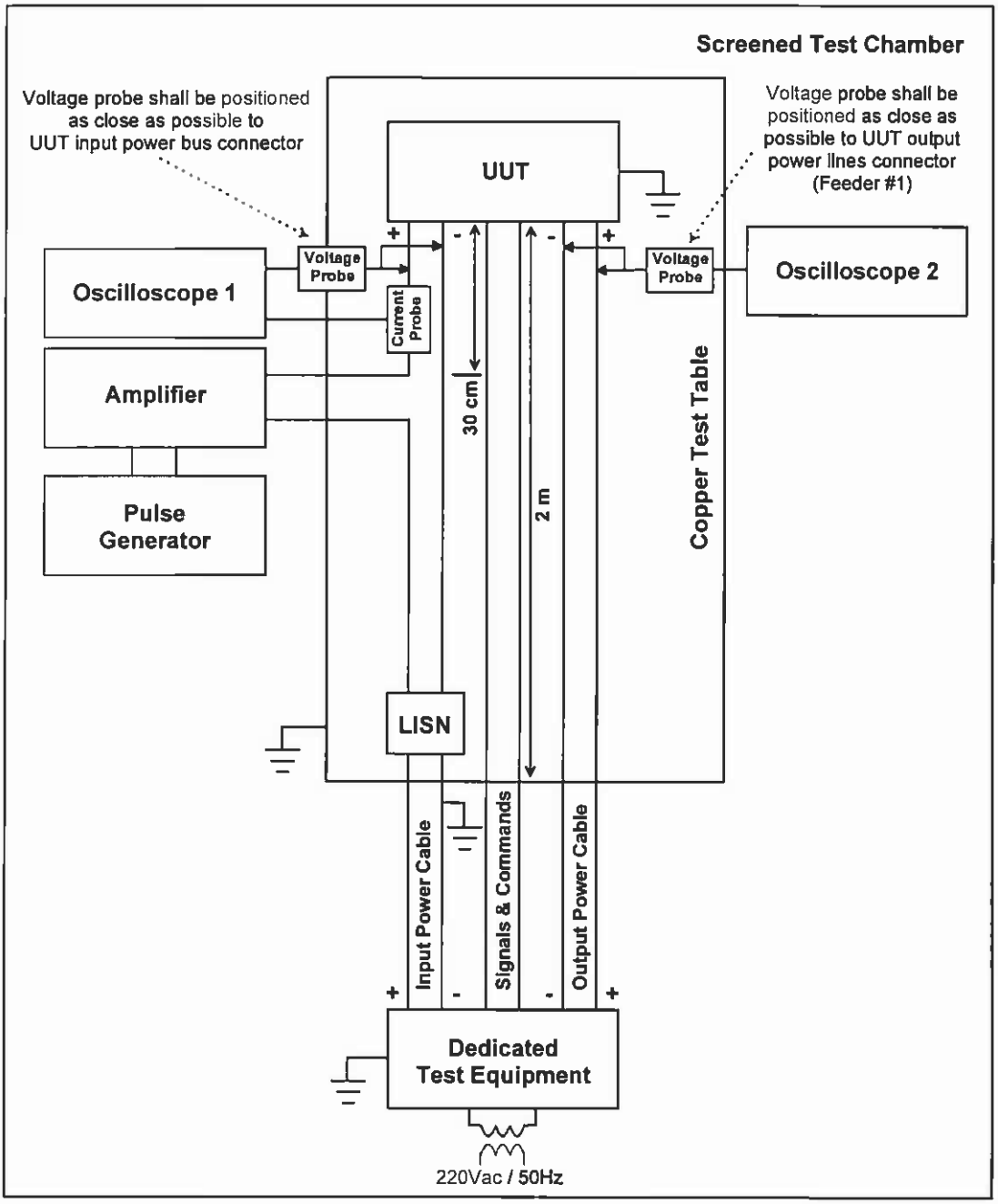

Figure 6-8: Normal & Abnormal Voltage Transients and Large Signal Stability Test Set-up

Questo documento contiene informazioni di proprietà di CARLO GAVAZZI SPACE SpA. Tutti i diritti sono riservati.
All information contained in this document are property of CARLO GAVAZZI SPACE SpA. All right reserved.

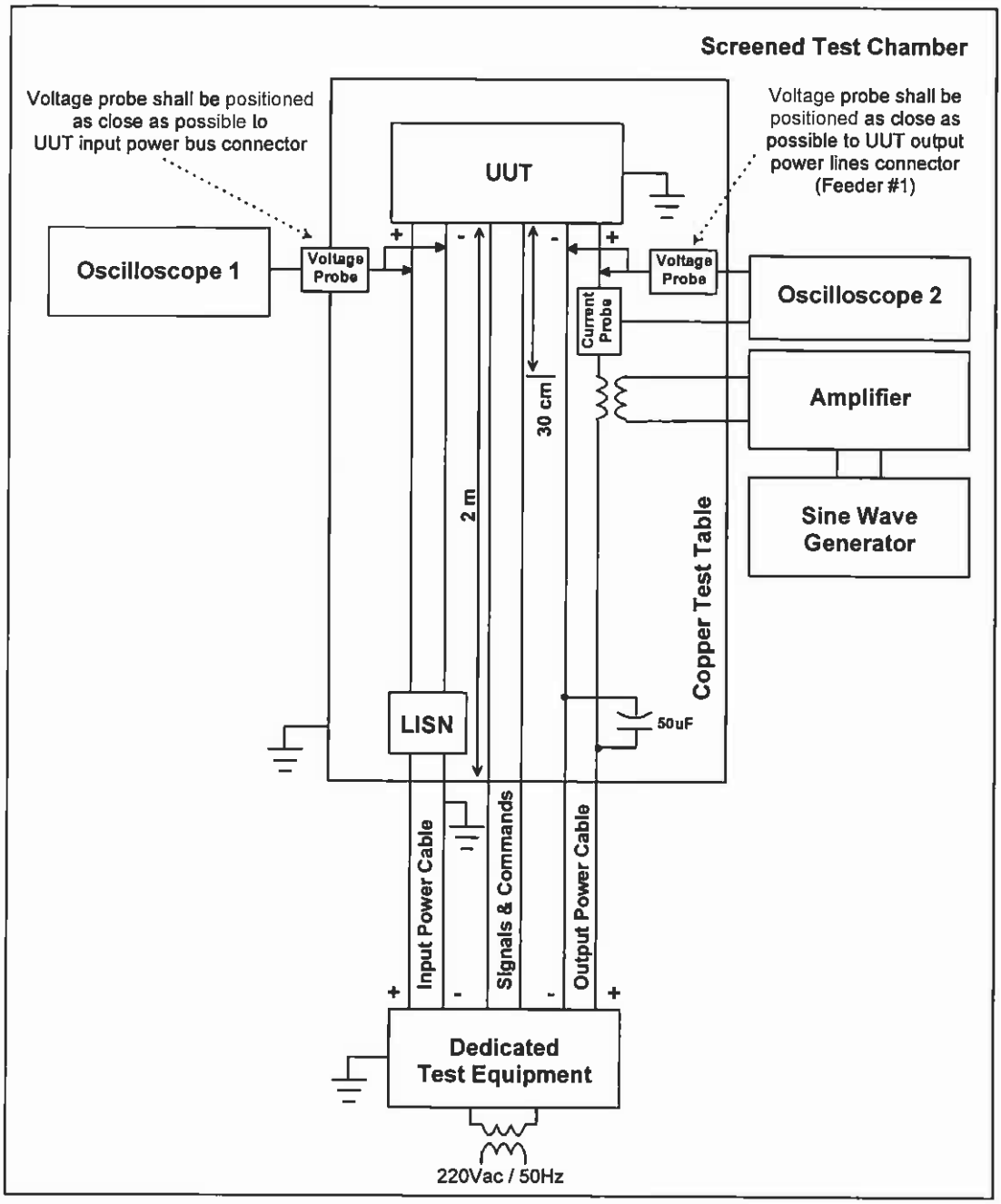

Figure 6-9: Output Sine Wave Injection (30Hz + 50kHz) Test Set-up (Transformer Coupling)

Questo documento contiene informazioni di proprietà di CARLO GAVAZZI SPACE SpA. Tutti i diritti sono riservati.
All information contained in this document are property of CARLO GAVAZZI SPACE SpA. All right reserved.

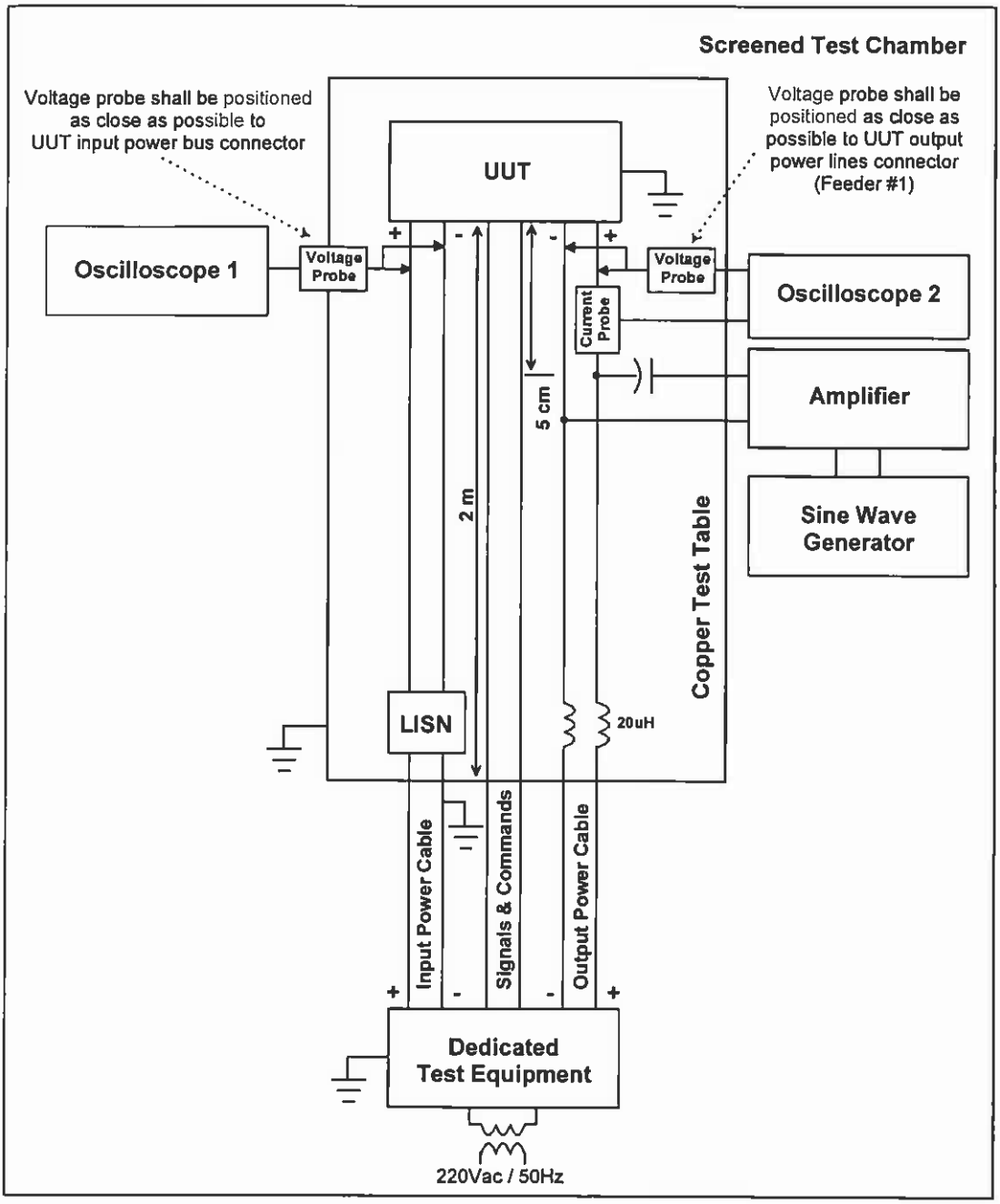

Figure 6-10: Output Sine Wave Injection (50kHz ÷ 50MHz) Test Set-up (Capacitor Coupling)

Questo documento contiene informazioni di proprietà di CARLO GAVAZZI SPACE SpA. Tutti i diritti sono riservati.
All information contained in this document are property of CARLO GAVAZZI SPACE SpA. All right reserved.

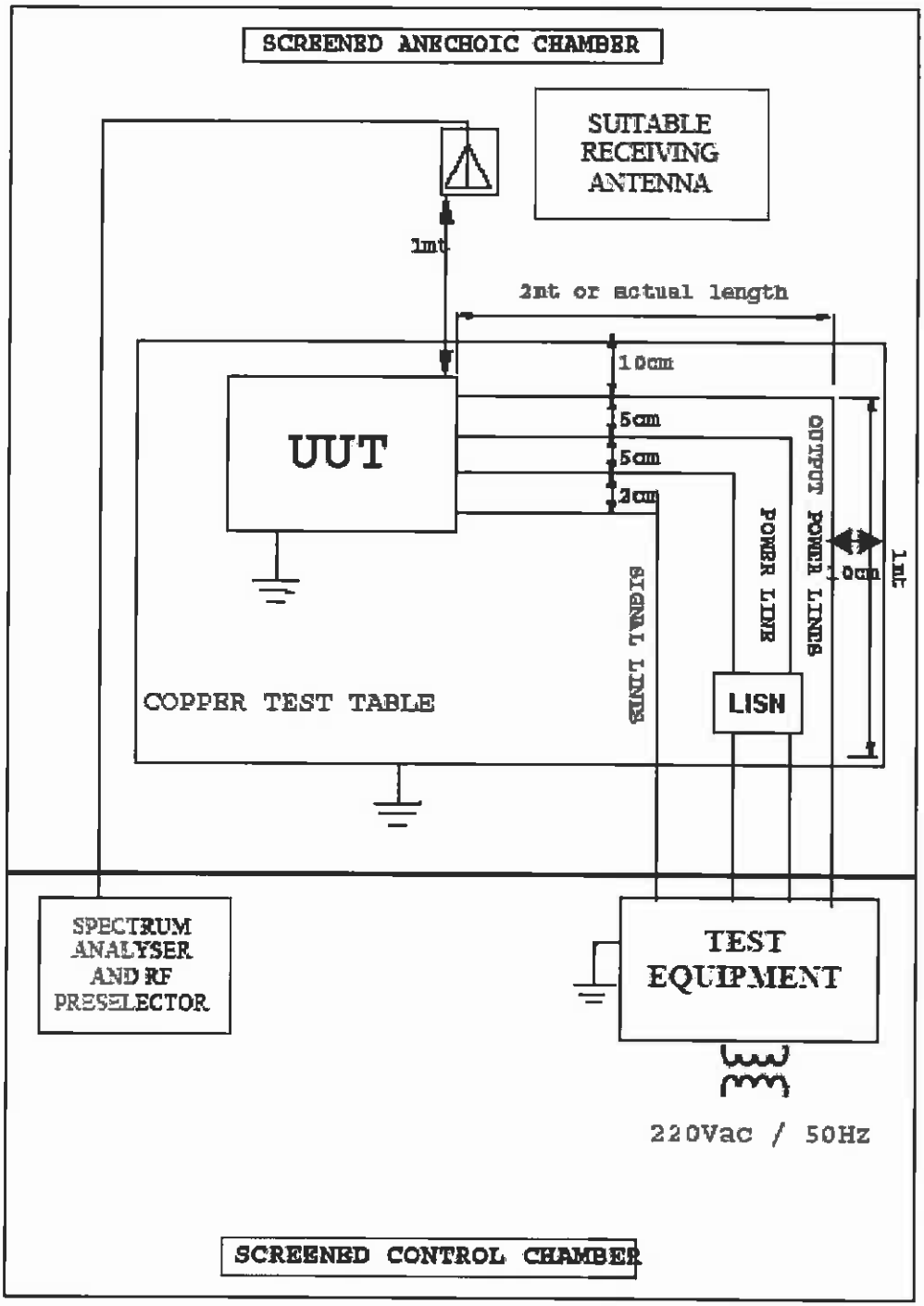

Figure 6-11: Radiated emissions setup

Questo documento contiene informazioni di proprietà di CARLO GAVAZZI SPACE SpA. Tutti i diritti sono riservati.
All information contained in this document are property of CARLO GAVAZZI SPACE SpA. All right reserved.

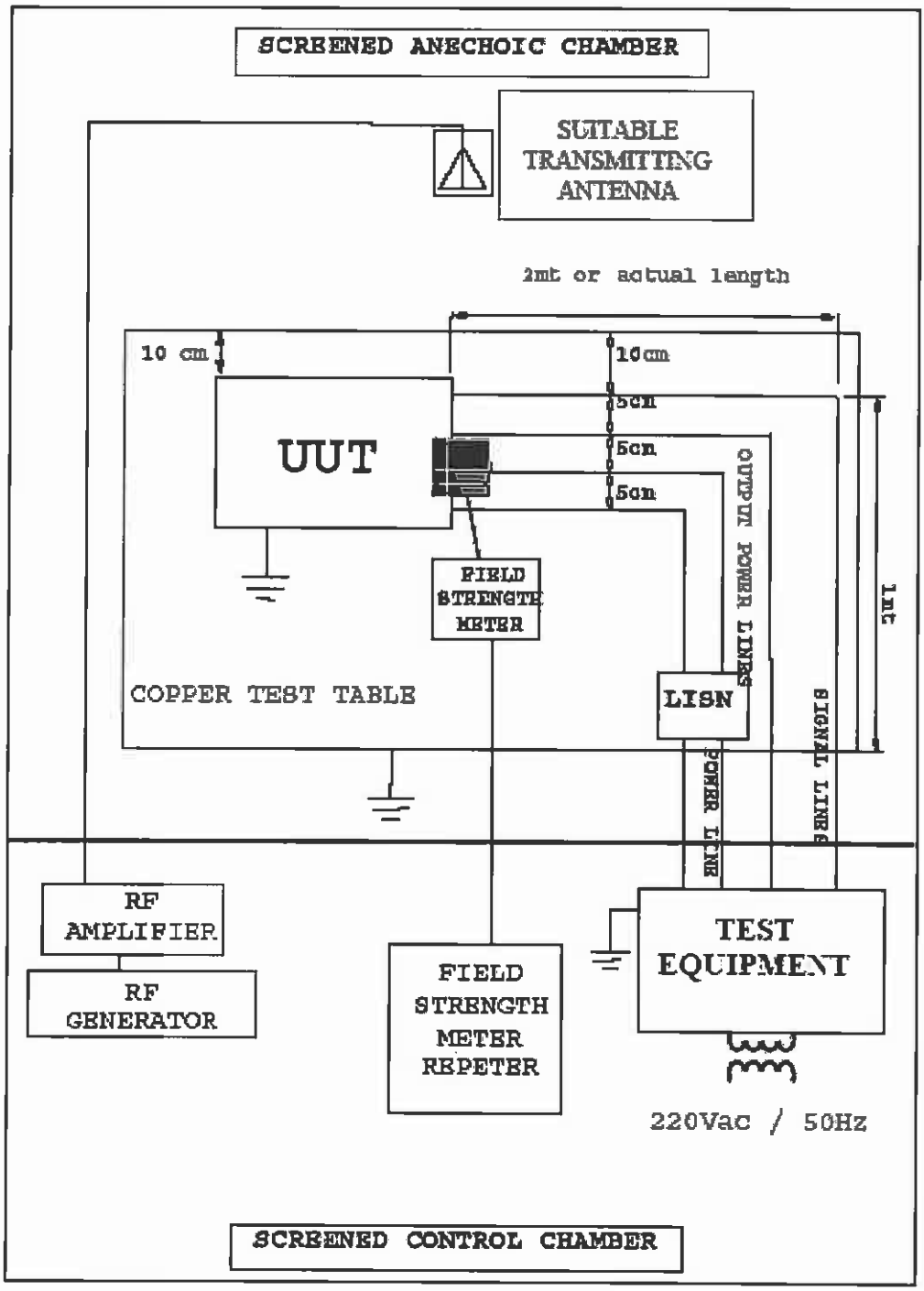

Figure 6-12: Radiated susceptibility setup

Questo documento contiene informazioni di proprietà di CARLO GAVAZZI SPACE SpA. Tutti i diritti sono riservati.
All information contained in this document are property of CARLO GAVAZZI SPACE SpA. All right reserved.

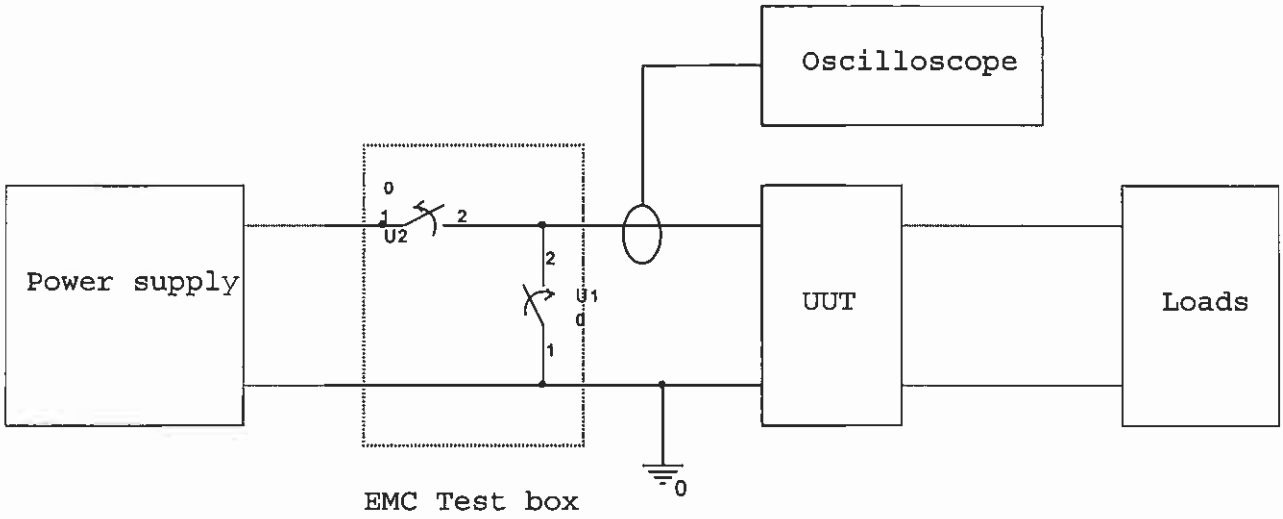

Figure 6-13: Reverse current

Questo documento contiene informazioni di proprietà di CARLO GAVAZZI SPACE SpA. Tutti i diritti sono riservati.
All information contained in this document are property of CARLO GAVAZZI SPACE SpA. All right reserved.

6.2 GROUNDING

6.2.1 GROUNDING OF THE UNIT UNDER TEST

During all the EMC tests the unit under test shall be bonded to a copper table. The thickness of the table shall be 5 mm and the area shall be 2 square meters with the smaller side of 1 meter.
The table shall be bonded to the shielded chamber. The DC resistance between table and shielded chamber shall be less than 10mΩ.
Only the provision included in the design of the unit under test shall be used to bond the unit under test to the ground plane. The bonding strap used to connect the unit under test to the copper test table shall have its length lower than five times its width. The bonding strap shall consist of copper and shall have a minimum thickness of 0.5mm.

6.2.2 GROUNDING OF THE TEST INSTRUMENTATION

The grounding of test instrumentation shall be in accordance with the following rules to avoid the generation of false data which may be introduced by ground loops:

- The interference measuring equipment shall be physically grounded with only one connection
- The interference instruments shall be connected to the AC power source through an isolation transformer
- The rod antenna metal base plate shall be bonded to the ground plane with strap of such length that the rod antenna can be positioned correctly. The width of the strap shall be the same of the metal base plate.

6.3 AMBIENT NOISE

During emission tests the ambient noise level, measured before starting the tests with the unit under test in "OFF" condition and all simulators and monitors (dedicated test equipment) in "ON" condition, shall be at least 6dB below the allowable specified limits.

Questo documento contiene informazioni di proprietà di CARLO GAVAZZI SPACE SpA. Tutti i diritti sono riservati.
All information contained in this document are property of CARLO GAVAZZI SPACE SpA. All right reserved.

6.4 REQUIREMENTS CROSS REFERENCE

Cross reference among requirements and procedure steps is provided in Table 6-1.

AMS-RQ-CGS-002 Requirement	SSP 57003 Requirement	Procedure Section
4.1.4.2 Peak surge current	3.2.2.2.4 Surge Current	10.2.4 – 10.3.4
4.1.4.3 Ripple voltage and noise	3.2.2.1.2.1 Ripple voltage and noise	10.2.2 – 10.3.2
4.1.4.4 Transient voltages	3.2.2.1.3.1 Normal Transient Voltages	10.4.4 – 10.5.4
4.1.4.5 Abnormal voltage conditions	3.2.2.1.3.2 Fault Clearing Protection	10.4.5 – 10.5.5
4.1.4.7 PDS power input impedance	3.2.2.2.7 Interface C attached payload complex load impedances	10.4.2 – 10.5.2
4.1.4.8 Large signal stability	3.2.2.2.8 Large Signal Stability	10.4.6 – 10.5.6
5.5.2.3.1 Conducted emissions	3.2.2.4.4 Electromagnetic Interference	10.2.1 – 10.3.1
5.5.2.3.2 Conducted susceptibility– ripple voltage	3.2.2.1.2.2 Ripple voltage spectrum	10.4.1 – 10.5.1
	3.2.2.2.5 Reverse Current	10.6
5.5.2.4 Electrostatic discharge	3.2.2.4.5 Electrostatic Discharge	10.7

Table 6-1: Requirements Cross Reference

Questo documento contiene informazioni di proprietà di CARLO GAVAZZI SPACE SpA. Tutti i diritti sono riservati.
All information contained in this document are property of CARLO GAVAZZI SPACE SpA. All right reserved.

6.5 PDS TEST EQUIPMENT

The complete list of instruments used during tests shall be recorded in Table 6-5. The list shall be filled up during tests and reported in Test Report.
The following figure shows the main parts constituting the PDS Test Equipment.

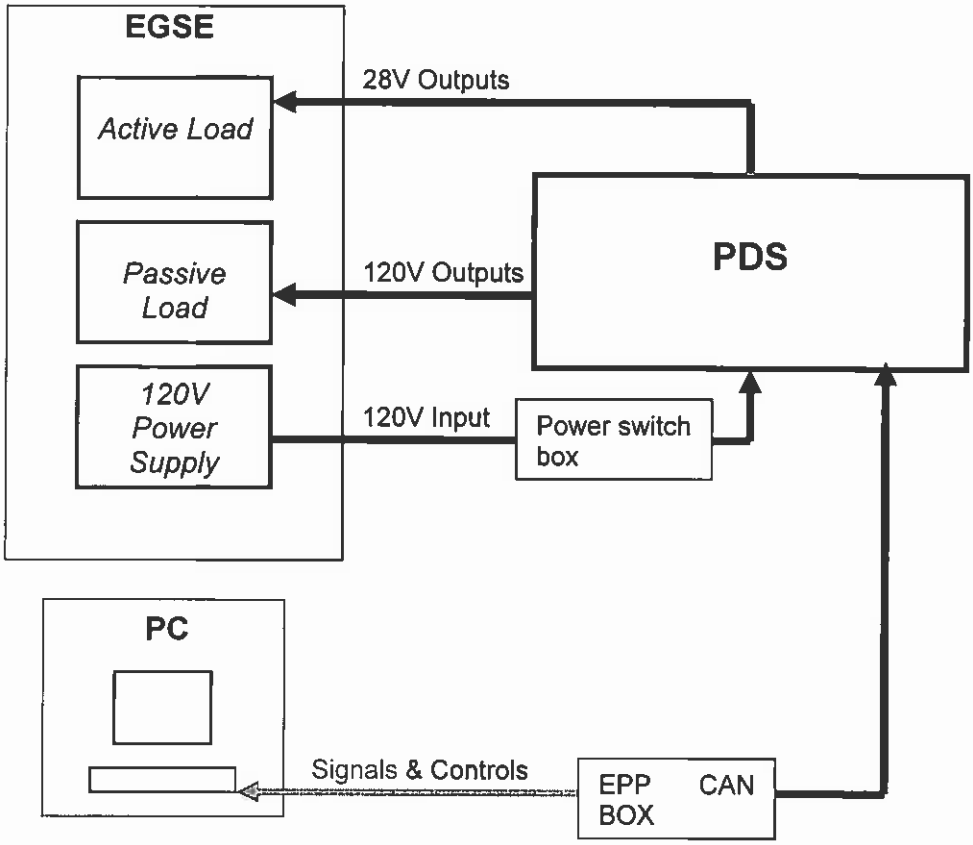

Figure 6-14: PDS Test Equipment

Questo documento contiene informazioni di proprietà di CARLO GAVAZZI SPACE SpA. Tutti i diritti sono riservati.
All information contained in this document are property of CARLO GAVAZZI SPACE SpA. All right reserved.

6.6 SPECTRUM ANALYZER

A spectrum analyzer shall be used for the measurements of both conducted and radiated emission in frequency domain. The spectrum analyzer shall be set in peak detection mode and shall present an accuracy better than +/-2 dB for levels and 2% for frequency. A R.F. pre-selector shall be used, together with the spectrum analyzer, to increase the analyzer's tolerance to broad band overload.

To perform the tests the following resolution bandwidth shall be used:

Frequency range	Narrowband Resolution BW
30 Hz ÷ 1 kHz	10 Hz
1 KHz ÷ 10 kHz	100 Hz
10 kHz ÷ 1 MHz	1 kHz
1 MHz ÷ 50 MHz	10 kHz

Table 6-2: Conducted Emission Resolution Bandwidth

For each frequency range the video BW shall be three times the specified Resolution BW. The following criteria shall be taken into account to determine if emissions are to be considered broadband or narrowband:

- In peak analysis mode, switch the bandwidth from W1 to W2 (assuming that W2/W1 = 10). If there is a change in the spectrum analyzer indications which is:
  - lower than 10 dB → the signal shall be considered narrowband
  - greater than 10 dB → the signal shall be considered broadband

- Alternatively:
  - Set the spectrum analyzer sweep time to a calibrated value
  - Record the number of measured spectrum lines ("A" measurement)
  - Increase the sweep time by a factor of two
  - Record the number of measured spectrum lines ("B" measurement)
  - If the ratio (A/B) is about two the signal shall be considered broadband, otherwise the signal shall be considered narrowband.

The broadband signals are to be related to 1 MHz bandwidth using the relation:

- dBuV/m/MHz = dBuV/m + 10 Log(W2/1 MHz) for incoherent signals
- dBuV/m/MHz = dBuV/m + 20 Log(W2/1 MHz) for coherent signals

Questo documento contiene informazioni di proprietà di CARLO GAVAZZI SPACE SpA. Tutti i diritti sono riservati.
All information contained in this document are property of CARLO GAVAZZI SPACE SpA. All right reserved.

6.7 10 μF CAPACITOR AND LISN

During EMC tests a 10μF capacitor or a LISN (Line Impedance Stabilization Network) shall be connected on the power line according to the following table:

TEST	10μF	LISN
EC-01: Load NB Current Emission		X
EC-02: RIPPLE VOLTAGE AND NOISE		X
EC-03: Load Transient		X
EC-04: PEAK and SURGE Current		X
SC-01: Sine Wave Injection On Input DC Power Supply	30Hz to 50kHz	50kHz to 50MHz
SC-02: Input Impedance		X
SC-03: Voltage Spike Transients Injection On DC Power Lines		X
SC-04: Normal Voltage Transient Injection On DC Power Lines		X
SC-05: Abnormal Voltage Transient		X

Table 6-3: LISN or 10uF Capacitor use during EMC Tests

The 10μF capacitor insertion loss, measured into a 50Ω circuit (as required by MIL STD 220A), is shown in Figure 6-15.

The LISN circuit's schematic adopted for EMC tests is shown in Figure 6-16; the LISN impedance is shown in Figure 6-17.

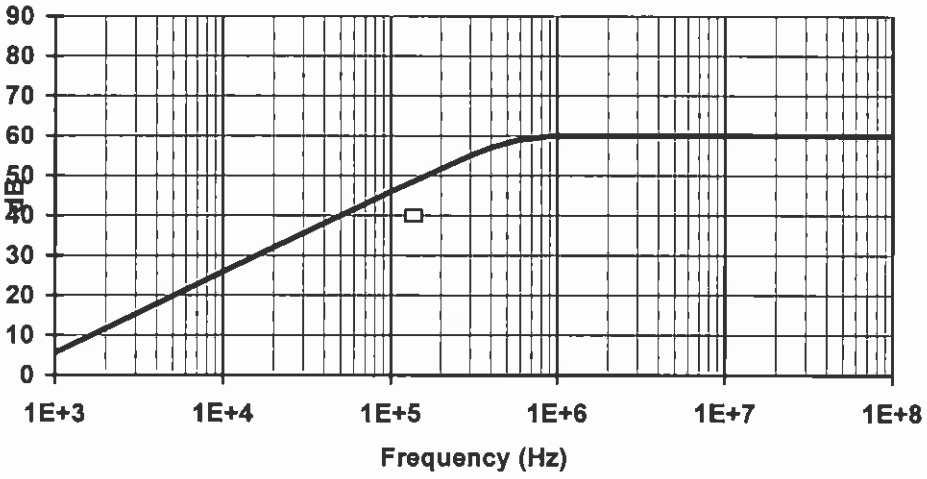

Figure 6-15: 10μF Capacitor Insertion Loss

Questo documento contiene informazioni di proprietà di CARLO GAVAZZI SPACE SpA. Tutti i diritti sono riservati.
All information contained in this document are property of CARLO GAVAZZI SPACE SpA. All right reserved.

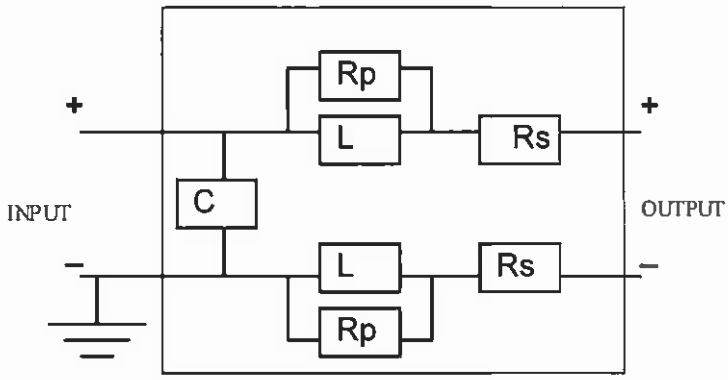

Electrical Component	Value for 120 Vdc
Rp	25Ω
Rs	0.05Ω
L	10μH
C	5000μF

Figure 6-16: LISN Electrical Schematic

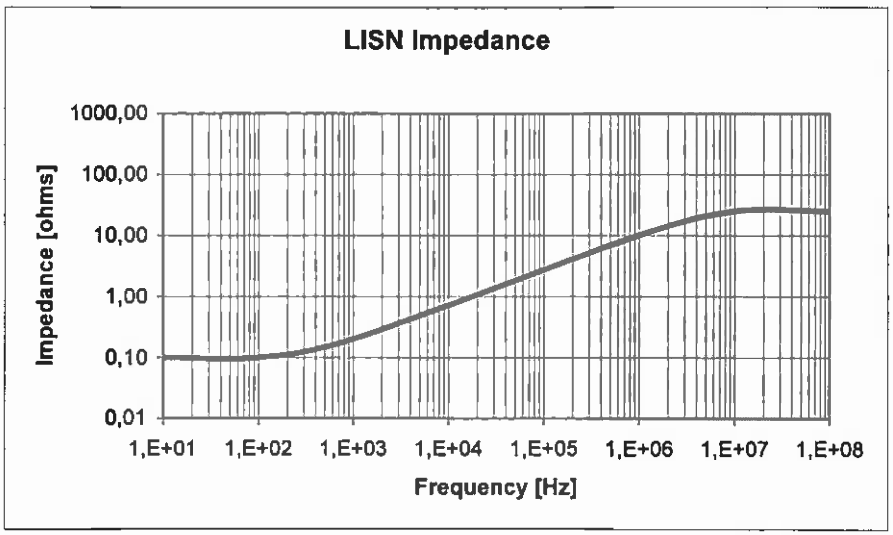

Figure 6-17: LISN Impedance

Questo documento contiene informazioni di proprietà di CARLO GAVAZZI SPACE SpA. Tutti i diritti sono riservati.
All information contained in this document are property of CARLO GAVAZZI SPACE SpA. All right reserved.

6.8 CURRENT PROBE

Conducted interference current shall be measured by means of special developed clamp-on current transformers. The current probe transfer impedance, which is defined as the ratio of secondary voltage across a 50Ω load to the primary current, shall be furnished by the current probe manufacturer.
The current probe correction factors shall be added to the Spectrum Analyzer measurement (read in dBuV) to obtain the real emission in dBuA.

6.9 TEST HARNESS

During conducted emission and susceptibility tests the power cable shown in Figure 6-18 shall be inserted between the TE Power Distribution Unit (PDU) and the UUT Power Input Connector.

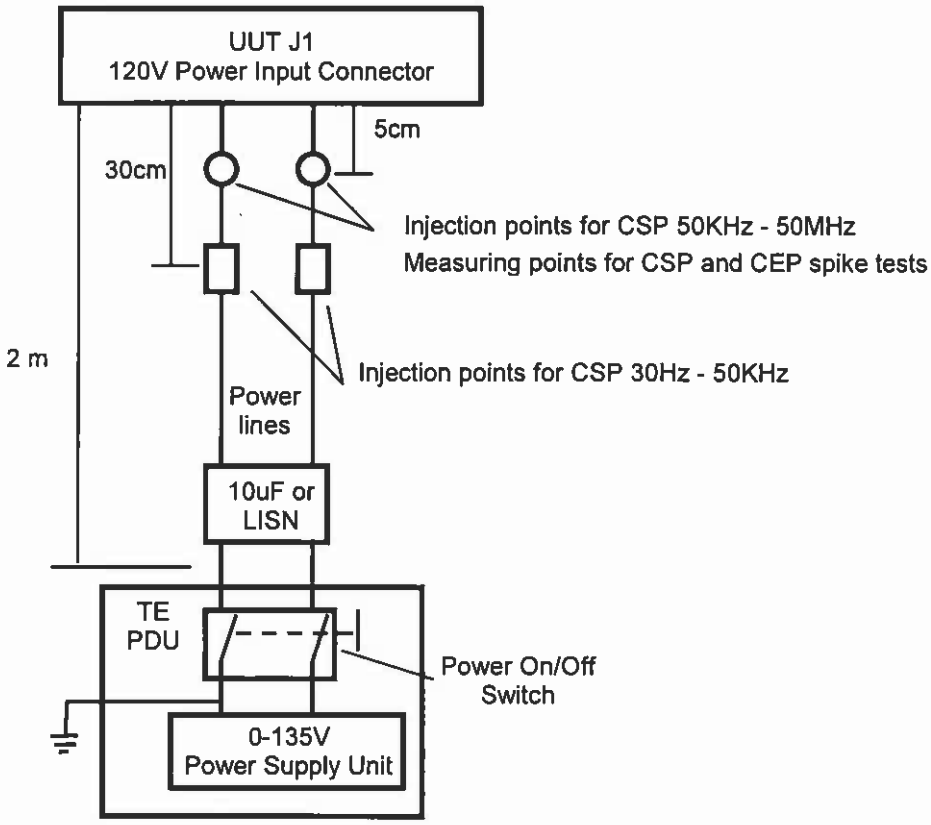

Figure 6-18: Power Cable For Conducted Emission and Susceptibility Tests

Questo documento contiene informazioni di proprietà di CARLO GAVAZZI SPACE SpA. Tutti i diritti sono riservati.
All information contained in this document are property of CARLO GAVAZZI SPACE SpA. All right reserved.

6.10 TEST ANTENNAS

During RE and CE test, the antennas of following table will be used.

FREQUENCY RANGE	TEST	ANTENNA CHARACTERISTICS
14kHz–30MHz	RE02	Electrically short high impedance electric field probe, vertically polarized. Traditionally the 41 inch rod with active or passive matching to 50 ohms.
14kHz–30MHz	RS03	The parallel plate (and numerous modifications), long wire, and E–field generator are available and listed in order of preference. The E–field generator should be reserved for the case in which the EUT is too large for other methods.
30MHz–200MHz	RE02 RS03	Dipole–like antennas. Typical antenna used in this band has been the MIL–STD–461 biconical. Care should be taken in the antenna selection to ascertain that the balun does an adequate job of matching the low frequency high antenna impedance of 50 ohms.
200MHz–1GHz	RE02 RS03	The traditional logconical and the logperiodic are available. The double ridge horn should be avoided, since the gain increases drastically with frequency.
1GHz–10GHz	RE03	RE02 Broadband (ridged) or standard gain horns. Logconicals are also available
10GHz–	RE02 RS03	20–dB standard gain horns.

Table 6-4: Recommended test antenna characteristics

6.11 MEASUREMT ANTENNAS POSITION

6.11.1 LOCATION

When performing radiated emission and susceptibility tests, no points of the antennas shall be less than 30 cm from the floor and ceiling and 1 meter from the walls of the shielded enclosure or obstruction.

6.11.2 LINEARLY POLARIZED ANTENNAS

For radiated emission measurements above 30 MHZ, linearly polarized antennas shall be positioned to measure the vertical and horizontal components of the emission.
For radiated susceptibility measurements above 30 MHz, linearly polarized test antennas shall be positioned so as to generate vertical and horizontal field.

Questo documento contiene informazioni di proprietà di CARLO GAVAZZI SPACE SpA. Tutti i diritti sono riservati.
All information contained in this document are property of CARLO GAVAZZI SPACE SpA. All right reserved.

6.12 TEST INSTRUMENT LIST

N.	EQUIPMENT	MANUFACTURER	P/N	S/N	ACCURACY (*)	NEXT CAL. DATE	REMARKS

Table 6-5: Instruments List

(*) Where not specified the accuracy is as stated on the instrument manufacturer data sheet

Questo documento contiene informazioni di proprietà di CARLO GAVAZZI SPACE SpA. Tutti i diritti sono riservati.
All information contained in this document are property of CARLO GAVAZZI SPACE SpA. All right reserved.

7. TEST CONDITIONS

- The UUT shall be tested in its defined configuration: it shall be properly closed, all electrical loads shall be present and the UUT interface function(s) shall be simulated.

- Unless otherwise specified, all measurements shall be performed at the following ambient conditions:

Temperature:	25°C +/- 3°C
Relative humidity:	between 30% and 60% RH
Pressure:	Ambient
Cleanliness:	100000 class

- All tests included in this document, unless otherwise specified, shall be performed in a proper test chamber in order to minimize measurement noise contribution that can false the verification of the requirements related to the running test procedure. General disposition shall be applied to maximize personnel safety from potential hazards

- Connectors savers shall be used on PFM as applicable to protect the UUT interface connectors.

- Skilled personnel shall be employed.

- All used instruments shall meet the necessary accuracy and shall not degrade the UUT performances.

Questo documento contiene informazioni di proprietà di CARLO GAVAZZI SPACE SpA. Tutti i diritti sono riservati.
All information contained in this document are property of CARLO GAVAZZI SPACE SpA. All right reserved.

8. TEST PROCEDURE VARIATION SHEET

In case that for any reason the test procedure has to be changed, the change shall be described in a Procedure Variation Sheet (PVS) as shown in the next page.

The PVS shall contain:

- Reference to the test procedure to be changed
- Reference to the relevant test, procedure page and paragraph
- Description of the change, possibly in the form was....is.....
- Reason for change
- Test Engineer, QA, Test conductor signatures and dates
- Customer signature and date (when required).

Each PVS shall be identified by a reference number provided in sequential order.

All the generated PVS shall be collected in a dedicated section of the Test Report.

Questo documento contiene informazioni di proprietà di CARLO GAVAZZI SPACE SpA. Tutti i diritti sono riservati.
All information contained in this document are property of CARLO GAVAZZI SPACE SpA. All right reserved.

PROCEDURE VARIATION SHEET ref. N°:

Test Procedure Ref.:	Page Revised:	Paragraph Revised:

Description of Change:

Reason for Change:

CONCURRENCE

Test Cond.	QA	System Eng.		Customer
Date	Date	Date		Date

Questo documento contiene informazioni di proprietà di CARLO GAVAZZI SPACE SpA. Tutti i diritti sono riservati.
All information contained in this document are property of CARLO GAVAZZI SPACE SpA. All right reserved.

9. TEST DATA SHEETS

The step-by-step procedure sheets are provided in the following pages.

9.1 DATA SHEETS FILLING UP

The following fields of the data sheets:

- UUT Data (including Model, Item, C.I., S/N)
- Measured value

shall be filled up during the tests execution and shall be part of the Test Report together with photographs, sketches, etc. eventually useful to document the tests execution/results.

Remarks field shall be used as a minimum to provide, where appropriate, reference to NCRs and PVS.

Test Report reference data shall be added in the relevant field.

Each data sheet (including the attachments) shall be certified by QA stamp and signature together with the Test Conductor signature and date.

Questo documento contiene informazioni di proprietà di CARLO GAVAZZI SPACE SpA. Tutti i diritti sono riservati.
All information contained in this document are property of CARLO GAVAZZI SPACE SpA. All right reserved.

UUT DATA :	Model	Item	C.I.	S/N

STEP n°	TEST SEQUENCE	EXPECTED VALUE	MEASURED VALUE	REMARKS

10. PDS EMC PRECOMPLIANCE TEST PROCEDURE

10.1 BONDING

10.1.1 B.01: UNIT BONDING STRUCTURE VERIFICATION

B-01.1	Objective: verify that the DC resistance between any mechanical part of PDS (including connectors body) and bonding stud is lower than 2.5 mΩ per bonding junction: between wall 1 and bonding stud between wall 2 and bonding stud between wall 3 and bonding stud between wall 4 and bonding stud between wall 5 and bonding stud between wall 6 and bonding stud	 <2.5mΩ <2.5mΩ <2.5mΩ <2.5mΩ <2.5mΩ <2.5mΩ		
B-01.2	Between the walls of PDS box and bonding stud: 1 and 3 1 and 4 1 and 5 1 and 6 2 and 3 2 and 4 2 and 5 2 and 6 3 and 5 3 and 6 4 and 5	 <2.5mΩ <2.5mΩ <2.5mΩ <2.5mΩ <2.5mΩ <2.5mΩ <2.5mΩ <2.5mΩ <2.5mΩ <2.5mΩ <2.5mΩ		

DATE:	TEST CONDUCTOR	QA	CUSTOMER

Questo documento contiene informazioni di proprietà di CARLO GAVAZZI SPACE SpA. Tutti i diritti sono riservati.
All information contained in this document are property of CARLO GAVAZZI SPACE SpA. All right reserved.

UUT DATA :	Model	Item	C.I.	S/N

STEP n°	TEST SEQUENCE	EXPECTED VALUE	MEASURED VALUE	REMARKS
	4 and 6	<2.5mΩ		

DATE:	TEST CONDUCTOR	QA	CUSTOMER

Questo documento contiene informazioni di proprietà di CARLO GAVAZZI SPACE SpA. Tutti i diritti sono riservati.
All information contained in this document are property of CARLO GAVAZZI SPACE SpA. All right reserved.

UUT DATA :	Model	Item	C.I.	S/N

STEP n°	TEST SEQUENCE	EXPECTED VALUE	MEASURED VALUE	REMARKS

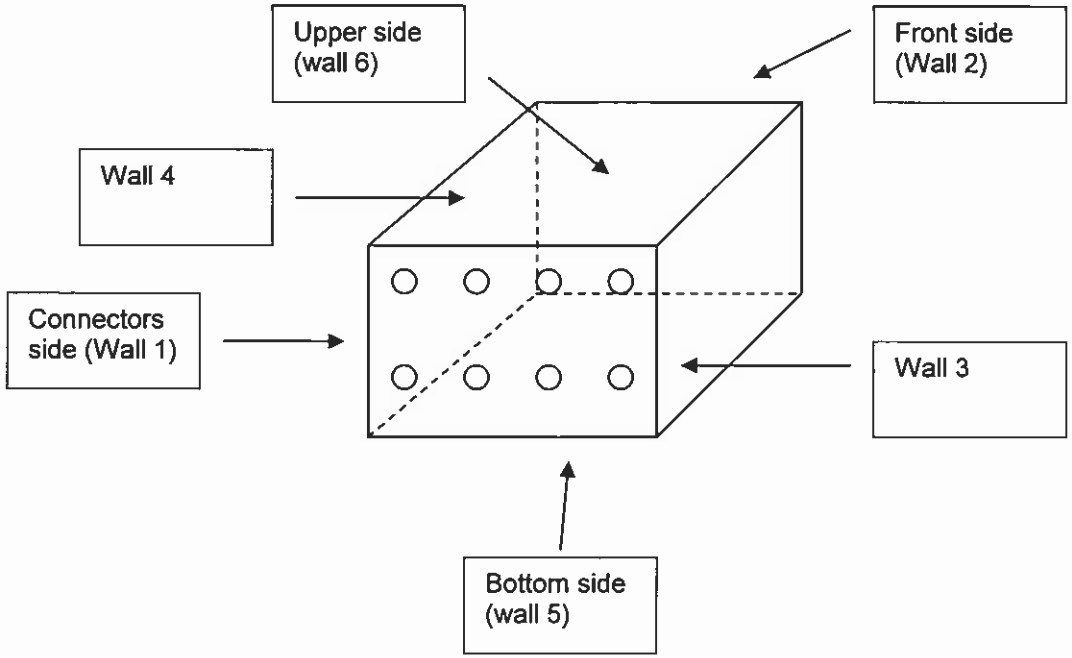

Figure 10-1: Test Site Bonding Verification Set-up

DATE:	TEST CONDUCTOR	QA	CUSTOMER

Questo documento contiene informazioni di proprietà di CARLO GAVAZZI SPACE SpA. Tutti i diritti sono riservati.
All information contained in this document are property of CARLO GAVAZZI SPACE SpA. All right reserved.

UUT DATA :	Model	Item	C.I.	S/N

STEP n°	TEST SEQUENCE	EXPECTED VALUE	MEASURED VALUE	REMARKS

10.1.2 B.02: TEST SITE BONDING VERIFICATION

B-02.1	Objective of this test is to verify the bonding resistance between equipment chassis and EMC test table. The test is performed at closed box. See Figure 10-2			
B-02.2	Connect the UUT to the EMC table via EMC table grounding strip	OK		
B-02.3	Use micro-ohmter to perform the measurement	OK		
B-02.4	Connect the instrument between UUT bonding stud and the other couple to the EMC table	OK		
B-02.5	Take note of the measurement	≤ 10 mΩ		
B-02.6	Connect the instrument between the EMC table bonding stud screw-point and the chamber ground point	OK		
B-02.7	Take note of the measurement	≤ 10 mΩ		

DATE:	TEST CONDUCTOR	QA	CUSTOMER

Questo documento contiene informazioni di proprietà di CARLO GAVAZZI SPACE SpA. Tutti i diritti sono riservati.
All information contained in this document are property of CARLO GAVAZZI SPACE SpA. All right reserved.

UUT DATA :	Model	Item	C.I.	S/N

STEP n°	TEST SEQUENCE	EXPECTED VALUE	MEASURED VALUE	REMARKS

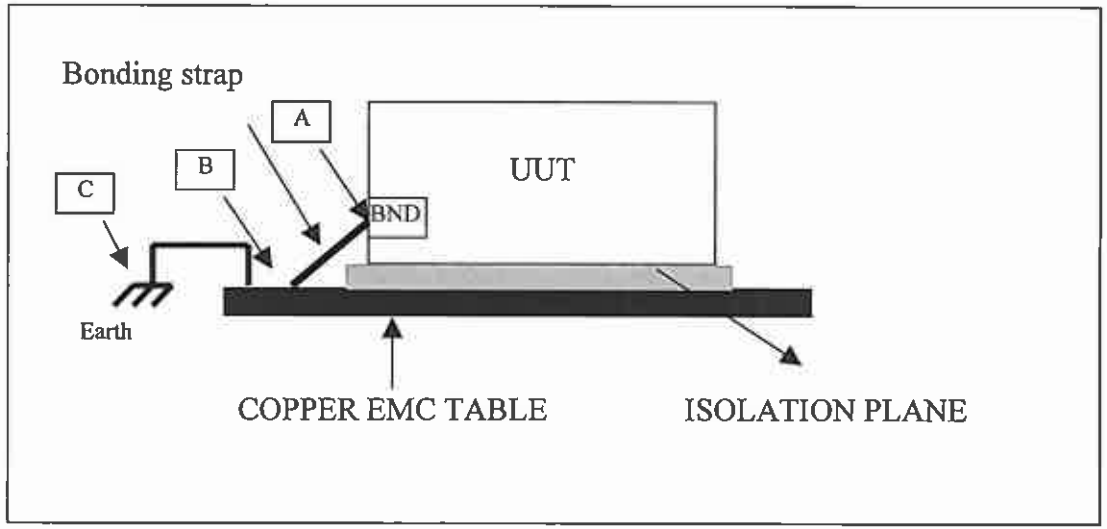

Figure 10-2: Test Site Bonding Verification Set-up

DATE:	TEST CONDUCTOR	QA	CUSTOMER

Questo documento contiene informazioni di proprietà di CARLO GAVAZZI SPACE SpA. Tutti i diritti sono riservati.
All information contained in this document are property of CARLO GAVAZZI SPACE SpA. All right reserved.

UUT DATA :	Model	Item	C.I.	S/N

STEP n°	TEST SEQUENCE	EXPECTED VALUE	MEASURED VALUE	REMARKS

10.2 CONDUCTED EMISSIONS ON A SECTION

10.2.1 EC-01: LOAD NB CURRENT EMISSION

EC-01.1	**OBJECTIVE** To verify the current ripple appearing on the input power lines in the frequency domain. The test is performed at closed box.			
EC-01.2	**TEST SET-UP** Test set-up is shown in Figure 6-2			
EC-01.3	**TEST FEATURE** - measurement type: differential and common mode - frequency range: 30 Hz ÷ 50 MHz - emission type: narrowband - measurement line: UUT Input Power Lines The test shall be performed on the following UUT Input Power Bus Lines: Operational BUS - J100 (AI_120V (positive) - J100 (AI_120V_RTN (negative))			
EC-01.4	**EMISSION LIMITS** **30 hertz (Hz) to 15 kilohertz (kHz):** 30 Hz–200 Hz: 110 dB above 1 microampere 200 Hz–15 kHz: Decreasing log linearly with increasing frequency from 110 to 74 dB above 1 microampere For equipment drawing more than one amp, the limits, in decibels (dB) shall be raised by 20 x log I, where I equals the total dc current used by the			

DATE:	TEST CONDUCTOR	QA	CUSTOMER

Questo documento contiene informazioni di proprietà di CARLO GAVAZZI SPACE SpA. Tutti i diritti sono riservati.
All information contained in this document are property of CARLO GAVAZZI SPACE SpA. All right reserved.

UUT DATA :	Model	Item	C.I.	S/N

STEP n°	TEST SEQUENCE	EXPECTED VALUE	MEASURED VALUE	REMARKS
	equipment under test. **15 kHz to 50 megahertz (MHz):** 15 KHz–500 KHz: Decreasing log linearly with increasing frequency from 74 to 45 dB above 1 microampere 500 kHz–50 MHz: 45 dB above 1 microampere For equipment drawing more than one amp, the limits shall be raised by 20 x log I, where I equals the total dc current used by the equipment under test.			
EC-01.5	**TEST RUN** Verify that UUT and Operational Bus are switched off	OK		
EC-01.6	Switch ON test equipment	OK		
EC-01.7	Take ambient noise measurement on the operational input power bus lines. Take measurements on: **HOT** input power bus line **RETURN** input power bus line Both **HOT and RETURN** (common mode) input power bus lines	OK		Annex plots in the end of document
EC-01.8	Verify that the emissions measurement are at least 6dB below the limits otherwise check for UUT TE emission	OK		
EC-01.9	Connect main power supply cable J100 (AI_120V (positive) and AI_120V_RTN (negative)) to the "power switch box"	J100 connected		
EC-01.10	Set Power supply to 120V	120,00V±1,00V		V1
EC-01.11	Set output current limitation to 27,5A	27,5A±0,05V		
EC-01.12	Enable power supply output	enabled		
EC-01.13	Verify that green led of **"power switch box"** is lighted	Green led lighted		
EC-01.14	Switch ON the **"power switch "**of **"power switch box"**	Switch ON		

DATE:	TEST CONDUCTOR	QA	CUSTOMER

Questo documento contiene informazioni di proprietà di CARLO GAVAZZI SPACE SpA. Tutti i diritti sono riservati.
All information contained in this document are property of CARLO GAVAZZI SPACE SpA. All right reserved.

UUT DATA :	Model	Item	C.I.	S/N

STEP n°	TEST SEQUENCE	EXPECTED VALUE	MEASURED VALUE	REMARKS
EC-01.15	Verify that red led of **"power switch box"** is lighted	Red led lighted		
EC-01.16	Load the PDS unit at the nominal load configuration (See Table 11.1)	OK		
EC-01.17	Measure the UUT current consumption	17,8A ± 0.2A		
EC-01.18	Perform measurement on **HOT** input power bus line	OK		Annex plot in the end of document
EC-01.19	Perform measurement on **RETURN** input power bus line	OK		Annex plot in the end of document
EC-01.20	Perform measurement on both **HOT and RETURN** (common mode) input power bus lines	OK		Annex plot in the end of document
EC-01.21	Switch OFF the **"power switch "**of **"power switch box"**	OK		
EC-01.22	**OFF-LINE REQUIREMENT VERIFICATION** Verify that the measurements are inside the limits	OK		

DATE:	TEST CONDUCTOR	QA	CUSTOMER

Questo documento contiene informazioni di proprietà di CARLO GAVAZZI SPACE SpA. Tutti i diritti sono riservati.
All information contained in this document are property of CARLO GAVAZZI SPACE SpA. All right reserved.

UUT DATA :	Model	Item	C.I.	S/N

STEP n°	TEST SEQUENCE	EXPECTED VALUE	MEASURED VALUE	REMARKS

BOARD	OUT NAME	DEF STATUS	CONNECTOR	Current [A]	Nominal Current config [A]
ESEM3B 1				**@120V**	**@120V**
out1	ECAL	ON	J103	1,2	
out2	Ram Rad., Set#1	ON	J104	3,2	
out3	TRD+TRD Gas	ON	J103	1,2	
out4	Tracker Rad. -Wake	OFF	J103	1,2	
out5	Ram Rad., Set#2	OFF	J103	2,4	
out6	(E,R)HV+E-Crates	ON	J103	1,2	
out7	RICH+LTOF	OFF	J103	1,2	
out8	Wake Rad.+CAB	OFF	J104	1,2	
out9	Cryocoolers	OFF	J104	1,2	
out10	Tracker Rad.-Ram	OFF	J104	1,2	
out11	CAB LHPs	OFF	J104	1,2	
out12	CCEB	OFF	J102	3,8	3,8
ESEM3B 2				**@120V**	**@120V**
out1	ECAL	ON	J203	1,2	
out2	Ram Rad., Set#1	ON	J204	3,2	
out3	TRD+TRD Gas	ON	J203	1,2	
out4	Tracker Rad. -Wake	OFF	J203	1,2	
out5	Ram Rad., Set#2	OFF	J203	2,4	
out6	(E,R)HV+E-Crates	ON	J203	1,2	
out7	RICH+LTOF	OFF	J203	1,2	
out8	Wake Rad.+CAB	OFF	J204	1,2	

DATE:	TEST CONDUCTOR	QA	CUSTOMER

Questo documento contiene informazioni di proprietà di CARLO GAVAZZI SPACE SpA. Tutti i diritti sono riservati.
All information contained in this document are property of CARLO GAVAZZI SPACE SpA. All right reserved.

UUT DATA :	Model	Item	C.I.	S/N

STEP n°	TEST SEQUENCE				EXPECTED VALUE	MEASURED VALUE	REMARKS
out9	Cryocoolers	OFF	J204		1,2		
out10	Tracker Rad.-Ram	OFF	J204		1,2		
out11	CAB LHPs	OFF	J204		1,2		
out12	CCEB	OFF	J202		3,8	3,8	
PB2+ESEM3A - 1					**@28V**	**@28V**	
28V.1.1	TPD3	OFF	J113		2,9	2,9	
28V.1.2	TPD7	OFF	J113		2,9	2,9	
28V.1.3	JPD_N	ON	J113		1,8	1,8	
28V.1.4	SPD1_N	OFF	J113		1,5	1,5	
28V.1.5	UGPD_N	OFF	J111		1,2	1,2	
28V.1.6	SPD0_R	OFF	J210		-	-	
28V.1.7	TPD1	OFF	J210		2,9	2,9	
28V.1.8	TTPD_R	OFF	J210		-	-	
PB2+ESEM3A - 2					**@28V**	**@28V**	
28V.2.1	ER1_N	OFF	J113		3.4	3.4	
28V.2.2	TPD2	OFF	J112		2,9	2,9	
28V.2.3	TPD6	OFF	J112		2,9	2,9	
28V.2.4	SPD3_N	OFF	J112		1,5	1,5	
28V.2.5	MPD_N	OFF	J112		1,8	1,8	
28V.2.6	UPD1	OFF	J112		1,6	1,6	
28V.2.7	SPD2_N	OFF	J111		1,5	1,5	
28V.2.8	CAB_R	OFF	J210		0,7	0,7	
PB2+ESEM3A - 3					**@28V**	**@28V**	
28V.3.1	TPD0	OFF	J111		2,9	2,9	
28V.3.2	TPD4	OFF	J111		2,9	2,9	
28V.3.3	ER0_N	OFF	J111		3.4	3.4	
28V.3.4	MPD_R	OFF	J212		-	-	

DATE:	TEST CONDUCTOR	QA	CUSTOMER

Questo documento contiene informazioni di proprietà di CARLO GAVAZZI SPACE SpA. Tutti i diritti sono riservati.
All information contained in this document are property of CARLO GAVAZZI SPACE SpA. All right reserved.

UUT DATA :	Model	Item	C.I.	S/N

STEP n°	TEST SEQUENCE				EXPECTED VALUE	MEASURED VALUE	REMARKS
28V.3.5	SPD3_R	OFF	J212		-	-	
28V.3.6	UGPD_R	OFF	J211		-	-	
28V.3.7	SPD2_R	OFF	J211		-	-	
28V.3.8	CAB_N	OFF	J110		2,6	2,6	
PB2+ESEM3A.- 4					**@28V**	**@28V**	
28V.4.1	JPD_R	ON	J213		-	-	
28V.4.2	ER1_R	OFF	J213		-	-	
28V.4.3	SPD1_R	OFF	J213		-	-	
28V.4.4	ER0_R	OFF	J211		-	-	
28V.4.5	UPD0	OFF	J110		1,6	1,6	
28V.4.6	SPD0_N	OFF	J110		1,5	1,5	
28V.4.7	TPD5	OFF	J110		2,9	2,9	
28V.4.8	TTPD_N	OFF	J110		4,8	4,8	

Table 10-1: Nominal Load Table

Questo documento contiene informazioni di proprietà di CARLO GAVAZZI SPACE SpA. Tutti i diritti sono riservati.
All information contained in this document are property of CARLO GAVAZZI SPACE SpA. All right reserved.

UUT DATA :	Model	Item	C.I.	S/N

STEP n°	TEST SEQUENCE	EXPECTED VALUE	MEASURED VALUE	REMARKS

10.2.2 EC-02: RIPPLE VOLTAGE AND NOISE

EC-02.1	**OBJECTIVE** To verify the voltage ripple generated by the UUT on the input power bus line is lower than limits. The test is performed at closed box			
EC-02.2	**TEST SET-UP** Test set-up is shown in Figure 6-4			
EC-02.3	**TEST FEATURE** - measurement type: differential mode - oscilloscope time base: 10mS, 1mS, 100uS, 10uS, 1uS, 100nS - oscilloscope trigger mode: normal - trigger level: close to the limit - bandwidth: 50 MHz - measurement line: UUT Input Power Lines (Worst Load Case) - applicable limit: 0.3Vpp * sqr (current A) The test shall be performed on the following UUT Input Power Bus Lines: Operational BUS - J100 (AI_120V (positive)) - J100 (AI_120V_RTN (negative))			
EC-02.4	**TEST RUN** Verify that UUT and Operational Bus are switched off	OK		
EC-02.5	Connect main power supply cable J100 (AI_120V (positive) and AI_120V_RTN (negative))to the "power switch box"	J100 connected		

DATE:	TEST CONDUCTOR	QA	CUSTOMER

Questo documento contiene informazioni di proprietà di CARLO GAVAZZI SPACE SpA. Tutti i diritti sono riservati.
All information contained in this document are property of CARLO GAVAZZI SPACE SpA. All right reserved.

UUT DATA :	Model	Item	C.I.	S/N

STEP n°	TEST SEQUENCE	EXPECTED VALUE	MEASURED VALUE	REMARKS
EC-02.6	Place the voltage probes in differential mode on positive and negative power leads of the input power bus lines	OK		
EC-02.7	Switch ON test equipment	OK		Main bus OFF
EC-02.8	Take and record the ambient noise measurement	OK		Annex picture in the end of the document
EC-02.9	Verify that the emission is at least 6dB below the limit	OK		
EC-02.10	Set power supply at 113Vdc	113,00V±1,00V		Worst case (maximum emissions)
EC-02.11	Set output current limitation to 27,5A	27,5A±0,05V		
EC-02.12	Enable power supply output	enabled		
EC-02.13	Verify that green led of "power switch box" is lighted	Green led ligthed		
EC-02.14	Switch ON the "power switch "of "power switch box"	Switch ON		
EC-02.15	Verify that red led of "power switch box" is lighted	Red led lighted		
EC-02.16	Set PDS unit in nominal configuration described in Table 11.1	OK		
EC-02.17	Measure the UUT current consumption	18,7A ± 0.2A		
EC-02.18	Set the time base of the oscilloscope to 10mS	OK		
EC-02.19	Verify that noise is lower than 0.3Vpp * sqr (current without 120V lines)	0.3*sqr(15)= 1.16Vpp		Annex plot in the end of document
EC-02.20	Set the time base of the oscilloscope to 1mS	OK		
EC-02.21	Verify that noise is lower than 0.3Vpp * sqr (current without 120V lines)	0.3*sqr(15)= 1.16Vpp		Annex plot in the end of document
EC-02.22	Set the time base of the oscilloscope to 100uS	OK		
EC-02.23	Verify that noise is lower than 0.3Vpp * sqr (current without 120V lines)	0.3*sqr(15)= 1.16Vpp		Annex plot in the end of document
EC-02.24	Set the time base of the oscilloscope to 10uS	OK		
EC-02.25	Verify that noise is lower than 0.3Vpp * sqr (current without 120V lines)	0.3*sqr(15)= 1.16Vpp		Annex plot in the end of document

DATE:	TEST CONDUCTOR	QA	CUSTOMER

Questo documento contiene informazioni di proprietà di CARLO GAVAZZI SPACE SpA. Tutti i diritti sono riservati.
All information contained in this document are property of CARLO GAVAZZI SPACE SpA. All right reserved.

UUT DATA :	Model	Item	C.I.	S/N

STEP n°	TEST SEQUENCE	EXPECTED VALUE	MEASURED VALUE	REMARKS
EC-02.26	Set the time base of the oscilloscope to 1uS	OK		
EC-02.27	Verify that noise is lower than 0.3Vpp * sqr (current without 120V lines)	0.3*sqr(15)= 1.16Vpp		Annex plot in the end of document
EC-02.28	Set the time base of the oscilloscope to 10uS	OK		
EC-02.29	Verify that noise is lower than 0.3Vpp * sqr (current without 120V lines)	0.3*sqr(15)= 1.16Vpp		Annex plot in the end of document
EC-02.30	Switch Off the "power switch "of "power switch box"			
EC-02.31	Switch off main bus			

DATE:	TEST CONDUCTOR	QA	CUSTOMER

Questo documento contiene informazioni di proprietà di CARLO GAVAZZI SPACE SpA. Tutti i diritti sono riservati.
All information contained in this document are property of CARLO GAVAZZI SPACE SpA. All right reserved.

UUT DATA :	Model	Item	C.I.	S/N

STEP n°	TEST SEQUENCE	EXPECTED VALUE	MEASURED VALUE	REMARKS

10.2.3 EC-03: LOAD TRANSIENT

EC-03.1	**OBJECTIVE** To verify that no pulse is exceeding the limit during the global ON/OFF operation and representative outlets ON/OFF operations. The voltage transients are measured during the ON/OFF operations as defined in the following steps. The test is performed at closed box			
EC-03.2	**TEST SET-UP** Test set-up is shown in Figure 6-4 Important note: the power switch box must be connected between LISN and PDS unit			ESEM 3-B loads connected. External heaters not connected
EC-03.3	**TEST FEATURE** - measurement type: differential mode - bandwidth: 50 MHz - measurement line: UUT Input Power Lines - **applicable limit: see** Figure 10-3: Transients Emission Limit The test shall be performed on the following UUT Input Power Bus Lines: Operational BUS - J100 (AI_120V (positive)) - J100 (AI_120V_RTN (negative))			
EC-03.4	**TEST RUN**			
EC-03.5	Verify that TE is on (with Operational Bus off)	OK		
EC-03.6	Set main bus to 120V	120V±1V		
EC-03.7	Switch ON the "power switch "of "power switch box"	OK		

DATE:	TEST CONDUCTOR	QA	CUSTOMER

Questo documento contiene informazioni di proprietà di CARLO GAVAZZI SPACE SpA. Tutti i diritti sono riservati.
All information contained in this document are property of CARLO GAVAZZI SPACE SpA. All right reserved.

UUT DATA :	Model	Item	C.I.	S/N

STEP n°	TEST SEQUENCE	EXPECTED VALUE	MEASURED VALUE	REMARKS
EC-03.8	Set the unit in nominal configuration	OK		17,8A input current absorption
EC-03.9	Set the oscilloscope in single mode acquisition	OK		
EC-03.10	From remote switch off PB2-2			
EC-03.11	Record the voltage transient	OK		Annex plot in the end of document
EC-03.12	Verify that the voltage transition is within the limit shown in Figure 10-3	OK		
EC-03.13	Set the oscilloscope in single mode acquisition	OK		
EC-03.14	From remote switch ON PB2-2	OK		
EC-03.15	Record the voltage transient	OK		Annex plot in the end of document
EC-03.16	Verify that the voltage transition is within the limit shown in Figure 10-3	OK		
EC-03.17	Set the oscilloscope in single mode acquisition	OK		
EC-03.18	From remote, ESEM 3-B window, switch off outlet 12	OK		ESEM 3-B on transient measure
EC-03.19	Record the voltage transient	OK		Annex plot in the end of document
EC-03.20	Verify that the voltage transition is within the limit shown in Figure 10-3	OK		
EC-03.21	Set the oscilloscope in single mode acquisition	OK		
EC-03.22	From remote, ESEM 3-B window, switch on outlet 12	OK		ESEM 3-B off transient measure
EC-03.23	Record the voltage transient	OK		Annex plot in the end of document
EC-03.24	Verify that the voltage transition is within the limit shown in Figure 10-3	OK		
EC-03.25	Switch off the "power switch "of "power switch box"	OK		Global switch off command test
EC-03.26	Switch off main bus	OK		

DATE:	TEST CONDUCTOR	QA	CUSTOMER

Questo documento contiene informazioni di proprietà di CARLO GAVAZZI SPACE SpA. Tutti i diritti sono riservati.
All information contained in this document are property of CARLO GAVAZZI SPACE SpA. All right reserved.

UUT DATA :	Model	Item	C.I.	S/N

STEP n°	TEST SEQUENCE	EXPECTED VALUE	MEASURED VALUE	REMARKS

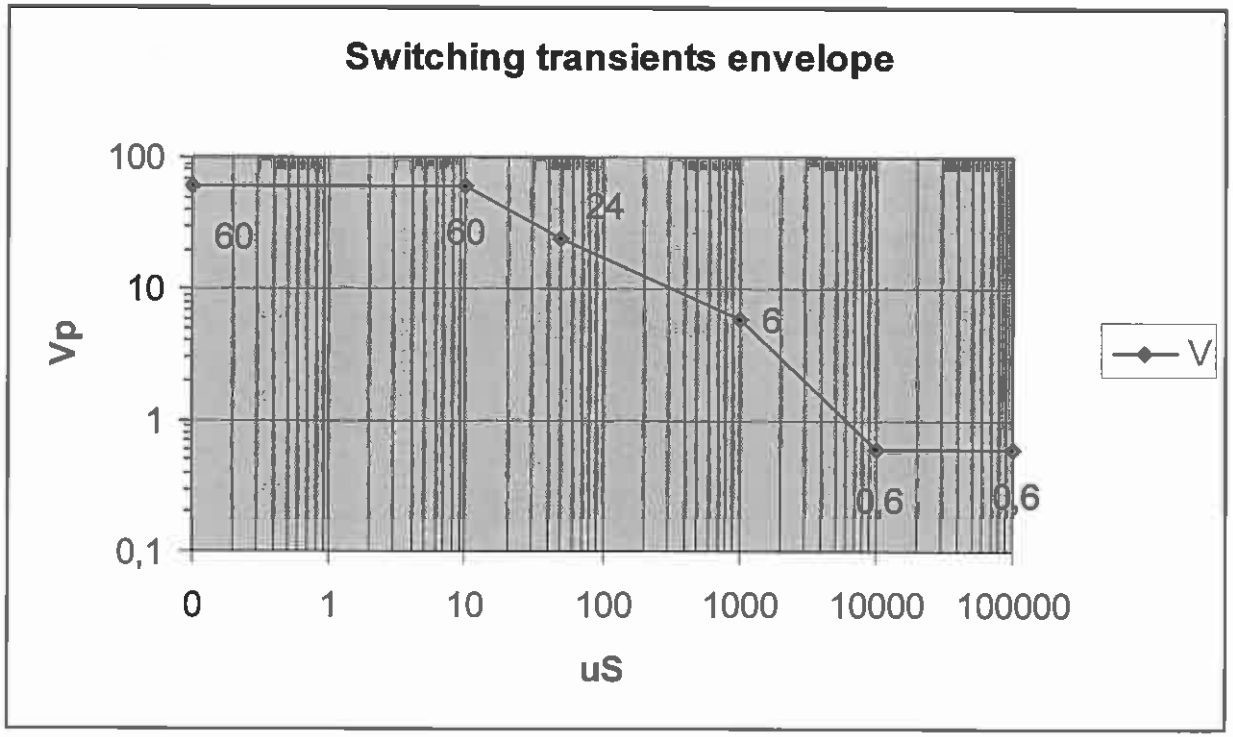

Figure 10-3: Transients Emission Limit

DATE:	TEST CONDUCTOR	QA	CUSTOMER

Questo documento contiene informazioni di proprietà di CARLO GAVAZZI SPACE SpA. Tutti i diritti sono riservati.
All information contained in this document are property of CARLO GAVAZZI SPACE SpA. All right reserved.

UUT DATA :	Model	Item	C.I.	S/N

STEP n°	TEST SEQUENCE	EXPECTED VALUE	MEASURED VALUE	REMARKS

10.2.4 EC-04: PEAK AND SURGE CURRENT

EC-04.1	**OBJECTIVE** To verify that the inrush and surge current appearing on the input power lines in the time domain does not exceed the limits. The test is performed at closed box			
EC-04.2	**TEST SET-UP** Test set up is shown in Figure 6-3			ESEM 3-B loads connected External heaters not connected
EC-04.3	Set all the loads in nominal value			
EC-04.4	**TEST FEATURE** - measurement type: differential mode - bandwidth: 50 MHz - measurement line: UUT Input Power Lines - **applicable limits:** o **Ipk** = 27.3 A for Vbus=126V and 28.5 A for Vbus=113V o **dI/dt** = 163.5 A/ms A/ms for Vbus=126V and 157.5 A/ms for Vbus=113V The test shall be performed on the following UUT Input Power Bus Lines: Operational BUS - J100 (AI_120V (positive)) - J100 (AI_120V_RTN (negative))			
EC-04.5	**TEST RUN** Verify that UUT and Operational Bus are switched off	OK		
EC-04.6	Verify that TE is on (with Operational Bus off)	OK		

DATE:	TEST CONDUCTOR	QA	CUSTOMER

Questo documento contiene informazioni di proprietà di CARLO GAVAZZI SPACE SpA. Tutti i diritti sono riservati.
All information contained in this document are property of CARLO GAVAZZI SPACE SpA. All right reserved.

UUT DATA :	Model	Item	C.I.	S/N

STEP n°	TEST SEQUENCE	EXPECTED VALUE	MEASURED VALUE	REMARKS
EC-04.7	Connect main and return power bus lines to power supply through the LISN	OK		
EC-04.8	Place the current probe on the positive power lead of the input power bus line	OK		
EC-04.9	Set out JPD_N to 1.8A current absorption	1.8A±0.2A		
EC-04.10	Set out JPD_R to 0A current absorption	0±0.2A		
EC-04.11	Set power supply at 113Vdc	113Vdc ± 1Vdc		
EC-04.12	Set the oscilloscope in single mode acquisition	OK		
EC-04.13	Switch ON the "power switch "of "power switch box"	Switch ON		
EC-04.14	Record the current transient	OK		Annex measure in the end of document
EC-04.15	Switch OFF the "power switch "of "power switch box"	OK		
EC-04.16	Verify the measurements at 113Vdc:			
EC-04.17	- Ipk	< 28.5A		
EC-04.18	- dI/dt	< 157.5 A/ms		
EC-04.19	Set power supply at 126Vdc	126Vdc ± 1Vdc		
EC-04.20	Set the oscilloscope in single mode acquisition	OK		
EC-04.21	Switch ON the "power switch "of "power switch box"	OK		
EC-04.22	Record the current transient	OK		Annex measure in the end of document
EC-04.23	Switch OFF the "power switch "of "power switch box"	OK		
EC-04.24	Verify the measurements at 126Vdc:			
EC-04.25	- Ipk	< 27.3A		
EC-04.26	- dI/dt	< 163.5 A/ms		
EC-04.27	Switch-off the Operational Bus by operating on the power supply on/off switch	OK		

DATE:	TEST CONDUCTOR	QA	CUSTOMER

Questo documento contiene informazioni di proprietà di CARLO GAVAZZI SPACE SpA. Tutti i diritti sono riservati.
All information contained in this document are property of CARLO GAVAZZI SPACE SpA. All right reserved.

UUT DATA :	Model	Item	C.I.	S/N

STEP n°	TEST SEQUENCE	EXPECTED VALUE	MEASURED VALUE	REMARKS

10.3 CONDUCTED EMISSIONS ON B SECTION

10.3.1 EC-01: LOAD NB CURRENT EMISSION

EC-01.23	**OBJECTIVE** To verify the current ripple appearing on the input power lines in the frequency domain. The test is performed at closed box.			
EC-01.24	**TEST SET-UP** Test set-up is shown in Figure 6-2			
EC-01.25	**TEST FEATURE** - measurement type: differential and common mode - frequency range: 30 Hz ÷ 50 MHz - emission type: narrowband - measurement line: UUT Input Power Lines The test shall be performed on the following UUT Input Power Bus Lines: Operational BUS - J200 (BI_120V (positive) - J200 (BI_120V_RTN (negative))			
EC-01.26	**EMISSION LIMITS** **30 hertz (Hz) to 15 kilohertz (kHz):** 30 Hz–200 Hz: 110 dB above 1 microampere 200 Hz–15 kHz: Decreasing log linearly with increasing frequency from 110 to 74 dB above 1 microampere For equipment drawing more than one amp, the limits, in decibels (dB) shall be raised by 20 x log I, where I equals the total dc current used by the			

DATE:	TEST CONDUCTOR	QA	CUSTOMER

Questo documento contiene informazioni di proprietà di CARLO GAVAZZI SPACE SpA. Tutti i diritti sono riservati.
All information contained in this document are property of CARLO GAVAZZI SPACE SpA. All right reserved.

UUT DATA :	Model	Item	C.I.	S/N

STEP n°	TEST SEQUENCE	EXPECTED VALUE	MEASURED VALUE	REMARKS
	equipment under test. **15 kHz to 50 megahertz (MHz):** 15 KHz–500 KHz: Decreasing log linearly with increasing frequency from 74 to 45 dB above 1 microampere 500 kHz–50 MHz: 45 dB above 1 microampere For equipment drawing more than one amp, the limits shall be raised by 20 x log I, where I equals the total dc current used by the equipment under test.			
EC-01.27	**TEST RUN** Verify that UUT and Operational Bus are switched off	OK		
EC-01.28	Switch ON test equipment			
EC-01.29	Take ambient noise measurement on the operational input power bus lines. Take measurements on: **HOT** input power bus line **RETURN** input power bus line Both **HOT and RETURN** (common mode) input power bus lines	OK		Annex plots in the end of document
EC-01.30	Verify that the emissions measurement are at least 6dB below the limits otherwise check for UUT TE emission	OK		
EC-01.31	Connect main power supply cable J100 (BI_120V (positive) and BI_120V_RTN (negative)) to the "power switch box"	J100 connected		
EC-01.32	Set Power supply to 120V	120,00V±1,00V		V1
EC-01.33	Set output current limitation to 27,5A	27,5A±0,05V		
EC-01.34	Enable power supply output	enabled		
EC-01.35	Verify that green led of **"power switch box"** is lighted	Green led lighted		
EC-01.36	Switch ON the **"power switch "**of **"power switch box"**	Switch ON		

DATE:	TEST CONDUCTOR	QA	CUSTOMER

Questo documento contiene informazioni di proprietà di CARLO GAVAZZI SPACE SpA. Tutti i diritti sono riservati.
All information contained in this document are property of CARLO GAVAZZI SPACE SpA. All right reserved.

UUT DATA :	Model	Item	C.I.	S/N

STEP n°	TEST SEQUENCE	EXPECTED VALUE	MEASURED VALUE	REMARKS
EC-01.37	Verify that red led of **"power switch box"** is lighted	Red led lighted		
EC-01.38	Load the PDS unit at the nominal load configuration (See Table 11.1)	OK		
EC-01.39	Measure the UUT current consumption	17,8A ± 0.2A		
EC-01.40	Perform measurement on **HOT** input power bus line	OK		Annex plot in the end of document
EC-01.41	Perform measurement on **RETURN** input power bus line	OK		Annex plot in the end of document
EC-01.42	Perform measurement on both **HOT and RETURN** (common mode) input power bus lines	OK		Annex plot in the end of document
EC-01.43	Switch OFF the **"power switch "**of **"power switch box"**	OK		
EC-01.44	OFF-LINE REQUIREMENT VERIFICATION Verify that the measurements are inside the limits	OK		

DATE:	TEST CONDUCTOR	QA	CUSTOMER

Questo documento contiene informazioni di proprietà di CARLO GAVAZZI SPACE SpA. Tutti i diritti sono riservati.
All information contained in this document are property of CARLO GAVAZZI SPACE SpA. All right reserved.

UUT DATA :	Model	Item	C.I.	S/N

STEP n°	TEST SEQUENCE	EXPECTED VALUE	MEASURED VALUE	REMARKS

10.3.2 EC-02: RIPPLE VOLTAGE AND NOISE

EC-02.32	**OBJECTIVE** To verify the voltage ripple generated by the UUT on the input power bus line is lower than limits. The test is performed at closed box			
EC-02.33	**TEST SET-UP** Test set-up is shown in Figure 6-4			
EC-02.34	**TEST FEATURE** - measurement type: differential mode - oscilloscope time base: 10mS, 1mS, 100uS, 10uS, 1uS, 100nS - oscilloscope trigger mode: normal - trigger level: close to the limit - bandwidth: 50 MHz - measurement line: UUT Input Power Lines (Worst Load Case) - applicable limit: 0.3Vpp * sqr(current A) The test shall be performed on the following UUT Input Power Bus Lines: Operational BUS - J200 (BI_120V (positive)) - J200 (BI_120V_RTN (negative))			
EC-02.35	**TEST RUN** Verify that UUT and Operational Bus are switched off	OK		
EC-02.36	Connect main power supply cable J200 (BI_120V (positive) and BI_120V_RTN (negative))to the "power switch box"	J200 connected		
EC-02.37	Place the voltage probes in differential mode on positive and negative power	OK		

DATE:	TEST CONDUCTOR	QA	CUSTOMER

Questo documento contiene informazioni di proprietà di CARLO GAVAZZI SPACE SpA. Tutti i diritti sono riservati.
All information contained in this document are property of CARLO GAVAZZI SPACE SpA. All right reserved.

UUT DATA :	Model	Item	C.I.	S/N

STEP n°	TEST SEQUENCE	EXPECTED VALUE	MEASURED VALUE	REMARKS
	leads of the input power bus lines			
EC-02.38	Switch ON test equipment	OK		Main bus OFF
EC-02.39	Take and record the ambient noise measurement	OK		Annex picture in the end of the document
EC-02.40	Verify that the emission is at least 6dB below the limit	OK		
EC-02.41	Set power supply at 113Vdc	113,00V±1,00V		Worst case (maximum emissions)
EC-02.42	Set output current limitation to 27,5A	27,5A±0,05V		
EC-02.43	Enable power supply output	enabled		
EC-02.44	Verify that green led of "power switch box" is lighted	Green led ligthed		
EC-02.45	Switch ON the "power switch "of "power switch box"	Switch ON		
EC-02.46	Verify that red led of "power switch box" is lighted	Red led lighted		
EC-02.47	Set PDS unit in nominal configuration described in Table 11.1	OK		
EC-02.48	Measure the UUT current consumption	18.7A ± 0.2A		
EC-02.49	Set the time base of the oscilloscope to 10mS	OK		
EC-02.50	Verify that noise is lower than 0.3Vpp * sqr (current without 120V lines)	0.3*sqr(15)= 1.16Vpp		Annex plot in the end of document
EC-02.51	Set the time base of the oscilloscope to 1mS	OK		
EC-02.52	Verify that noise is lower than 0.3Vpp * sqr (current without 120V lines)	0.3*sqr(15)= 1.16Vpp		Annex plot in the end of document
EC-02.53	Set the time base of the oscilloscope to 100uS	OK		
EC-02.54	Verify that noise is lower than 0.3Vpp * sqr (current without 120V lines)	0.3*sqr(15)= 1.16Vpp		Annex plot in the end of document
EC-02.55	Set the time base of the oscilloscope to 10uS	OK		
EC-02.56	Verify that noise is lower than 0.3Vpp * sqr (current without 120V lines)	0.3*sqr(15)= 1.16Vpp		Annex plot in the end of document
EC-02.57	Set the time base of the oscilloscope to 1uS	OK		

DATE:	TEST CONDUCTOR	QA	CUSTOMER

Questo documento contiene informazioni di proprietà di CARLO GAVAZZI SPACE SpA. Tutti i diritti sono riservati.
All information contained in this document are property of CARLO GAVAZZI SPACE SpA. All right reserved.

UUT DATA :	Model	Item	C.I.	S/N

STEP n°	TEST SEQUENCE	EXPECTED VALUE	MEASURED VALUE	REMARKS
EC-02.58	Verify that noise is lower than 0.3Vpp * sqr (current without 120V lines)	0.3*sqr(15)= 1.16Vpp		Annex plot in the end of document
EC-02.59	Set the time base of the oscilloscope to 10uS	OK		
EC-02.60	Verify that noise is lower than 0.3Vpp * sqr (current without 120V lines)	0.3*sqr(15)= 1.16Vpp		Annex plot in the end of document
EC-02.61	Switch Off the "power switch "of "power switch box"			
EC-02.62	Switch off main bus			

DATE:	TEST CONDUCTOR	QA	CUSTOMER

Questo documento contiene informazioni di proprietà di CARLO GAVAZZI SPACE SpA. Tutti i diritti sono riservati.
All information contained in this document are property of CARLO GAVAZZI SPACE SpA. All right reserved.

UUT DATA :	Model	Item	C.I.	S/N

STEP n°	TEST SEQUENCE	EXPECTED VALUE	MEASURED VALUE	REMARKS

10.3.3 EC-03: LOAD TRANSIENT

EC-03.27	**OBJECTIVE** To verify that no pulse is exceeding the limit during the global ON/OFF operation and representative outlets ON/OFF operations. The voltage transients are measured during the ON/OFF operations as defined in the following steps. The test is performed at closed box			
EC-03.28	**TEST SET-UP** Test set-up is shown in Figure 6-4 Important note: the power switch box must be connected between LISN and PDS unit			ESEM 3-B loads connected. External heaters not connected
EC-03.29	**TEST FEATURE** - measurement type: differential mode - bandwidth: 50 MHz - measurement line: UUT Input Power Lines - **applicable limit: see** Figure 10-3: Transients Emission Limit The test shall be performed on the following UUT Input Power Bus Lines: Operational BUS - J100 (AI_120V (positive)) - J100 (AI_120V_RTN (negative))			
EC-03.30	**TEST RUN**			
EC-03.31	Verify that TE is on (with Operational Bus off)	OK		
EC-03.32	Set main bus to 120V	120V±1V		
EC-03.33	Switch ON the "power switch "of "power switch box"	OK		
EC-03.34	Set the unit in nominal configuration	OK		17,8A input current absorption

DATE:	TEST CONDUCTOR	QA	CUSTOMER

Questo documento contiene informazioni di proprietà di CARLO GAVAZZI SPACE SpA. Tutti i diritti sono riservati.
All information contained in this document are property of CARLO GAVAZZI SPACE SpA. All right reserved.

UUT DATA :	Model	Item	C.I.	S/N

STEP n°	TEST SEQUENCE	EXPECTED VALUE	MEASURED VALUE	REMARKS
EC-03.35	Set the oscilloscope in single mode acquisition	OK		
EC-03.36	From remote switch off PB2-2			
EC-03.37	Record the voltage transient	OK		Annex plot in the end of document
EC-03.38	Verify that the voltage transition is within the limit shown in Figure 10-3	OK		
EC-03.39	Set the oscilloscope in single mode acquisition	OK		
EC-03.40	From remote switch ON PB2-2	OK		
EC-03.41	Record the voltage transient	OK		Annex plot in the end of document
EC-03.42	Verify that the voltage transition is within the limit shown in Figure 10-3	OK		
EC-03.43	Set the oscilloscope in single mode acquisition	OK		
EC-03.44	From remote, ESEM 3-B window, switch off outlet 12	OK		ESEM 3-B on transient measure
EC-03.45	Record the voltage transient	OK		Annex plot in the end of document
EC-03.46	Verify that the voltage transition is within the limit shown in Figure 10-3	OK		
EC-03.47	Set the oscilloscope in single mode acquisition	OK		
EC-03.48	From remote, ESEM 3-B window, switch on outlet 12	OK		ESEM 3-B off transient measure
EC-03.49	Record the voltage transient	OK		Annex plot in the end of document
EC-03.50	Verify that the voltage transition is within the limit shown in fig. Figure 10-3	OK		
EC-03.51	Switch off the "power switch "of "power switch box"	OK		Global switch off command test
EC-03.52	Switch off main bus	OK		

DATE:	TEST CONDUCTOR	QA	CUSTOMER

Questo documento contiene informazioni di proprietà di CARLO GAVAZZI SPACE SpA. Tutti i diritti sono riservati.
All information contained in this document are property of CARLO GAVAZZI SPACE SpA. All right reserved.

UUT DATA :	Model	Item	C.I.	S/N

STEP n°	TEST SEQUENCE	EXPECTED VALUE	MEASURED VALUE	REMARKS

10.3.4 EC-04: PEAK AND SURGE CURRENT

EC-04.28	**OBJECTIVE** To verify that the inrush and surge current appearing on the input power lines in the time domain does not exceed the limits. The test is performed at closed box			
EC-04.29	**TEST SET-UP** Test set up is shown in Figure 6-3			ESEM 3-B loads connected External heaters not connected
EC-04.30	Set all the loads in nominal value			
EC-04.31	**TEST FEATURE** - measurement type: differential mode - bandwidth: 50 MHz - measurement line: UUT Input Power Lines - **applicable limits:** o **Ipk** = 27.3 A for Vbus=126V and 28.5 A for Vbus=113V o **dI/dt** = 163.5 A/ms A/ms for Vbus=126V and 157.5 A/ms for Vbus=113V The test shall be performed on the following UUT Input Power Bus Lines: Operational BUS - J200 (BI_120V (positive)) - J200 (BI_120V_RTN (negative))			
EC-04.32	**TEST RUN** Verify that UUT and Operational Bus are switched off	OK		
EC-04.33	Verify that TE is on (with Operational Bus off)	OK		

DATE:	TEST CONDUCTOR	QA	CUSTOMER

Questo documento contiene informazioni di proprietà di CARLO GAVAZZI SPACE SpA. Tutti i diritti sono riservati.
All information contained in this document are property of CARLO GAVAZZI SPACE SpA. All right reserved.

UUT DATA :	Model	Item	C.I.	S/N

STEP n°	TEST SEQUENCE	EXPECTED VALUE	MEASURED VALUE	REMARKS
EC-04.34	Connect main and return power bus lines to power supply through the LISN	OK		
EC-04.35	Place the current probe on the positive power lead of the input power bus line	OK		
EC-04.36	Set out JPD_N to 1.8A current absorption	1.8A±0.2A		
EC-04.37	Set out JPD_R to 0A current absorption	0±0.2A		
EC-04.38	Set power supply at 113Vdc	113Vdc ± 1Vdc		
EC-04.39	Set the oscilloscope in single mode acquisition	OK		
EC-04.40	Switch ON the **"power switch "**of **"power switch box"**	Switch ON		
EC-04.41	Record the current transient	OK		Annex measure in the end of document
EC-04.42	Switch OFF the **"power switch "**of **"power switch box"**	OK		
EC-04.43	Verify the measurements at 113Vdc:			
EC-04.44	- Ipk	< 28.5A		
EC-04.45	- dI/dt	< 157.5 A/ms		
EC-04.46	Set power supply at 126Vdc	126Vdc ± 1Vdc		
EC-04.47	Set the oscilloscope in single mode acquisition	OK		
EC-04.48	Switch ON the **"power switch "**of **"power switch box"**	OK		
EC-04.49	Record the current transient	OK		Annex measure in the end of document
EC-04.50	Switch OFF the **"power switch "**of **"power switch box"**	OK		
EC-04.51	Verify the measurements at 126Vdc:			
EC-04.52	- Ipk	< 27.3A		
EC-04.53	- dI/dt	< 163.5 A/ms		
EC-04.54	Switch-off the Operational Bus by operating on the power supply on/off switch	OK		

DATE:	TEST CONDUCTOR	QA	CUSTOMER

Questo documento contiene informazioni di proprietà di CARLO GAVAZZI SPACE SpA. Tutti i diritti sono riservati.
All information contained in this document are property of CARLO GAVAZZI SPACE SpA. All right reserved.

UUT DATA :	Model	Item	C.I.	S/N

STEP n°	TEST SEQUENCE	EXPECTED VALUE	MEASURED VALUE	REMARKS

10.4 SECTION "A" CONDUCTED SUSCEPTIBILITY

10.4.1 SC-01: SINE WAVE INJECTION ON INPUT DC POWER SUPPLY

SC-01.1	**OBJECTIVE** To verify the UUT immunity from sine wave differential mode noise injected on input power bus lines. The test is performed at closed box			
SC-01.2	**TEST SET-UPS** Test set-ups are shown in: -Figure 6-5 for frequency range 30Hz ÷50kHz Figure 6-6 for frequency range 50kHz ÷50MHz			Heaters not connected Set loads in nominal configuration

DATE:	TEST CONDUCTOR	QA	CUSTOMER

Questo documento contiene informazioni di proprietà di CARLO GAVAZZI SPACE SpA. Tutti i diritti sono riservati.
All information contained in this document are property of CARLO GAVAZZI SPACE SpA. All right reserved.

UUT DATA :	Model	Item	C.I.	S/N

STEP n°	TEST SEQUENCE	EXPECTED VALUE	MEASURED VALUE	REMARKS

SC-01.3	**TEST FEATURE**
	Signal Characteristics:
	- frequency range: see Figure 10-4
	- voltage amplitude: see Figure 10-4
	- injection method:
	  - series/transformer for 30Hz ÷50kHz range
	  - parallel/capacitor (Xc lower than 5Ω over freq. range) for 50kHz ÷50MHz
	- sweep mode: sweep
	
	The test shall be performed on the following UUT Input Power Bus Lines:
	Operational BUS
	- J100 connector hot (+) power bus line
	- J100 connector return (-) power bus line			

SC-01.4	**SUSCEPTIBILITY CRITERIA** The equipment shall not exhibit any malfunction, degradation of performance or deviation from specified parameters beyond tolerances given by the corresponding specification From 30Hz up to 50KHz the requirement is also met when the audio power source adjusted to dissipate 50 Watts in a 0.5 ohm load, cannot develop the required voltage at the EUT power input terminals, and the EUT is not susceptible to the output of the signal source. From 50KHz up to 50MHz the requirement is also met under the following condition: A 1 Watt source of 50 ohms impedance cannot develop the required voltage at the EUT power input terminals, and the EUT is not susceptible to the output of the signal source.			
SC-01.5	**TEST RUN with transformer coupling (30Hz÷50kHz)** Verify that UUT and Operational Bus are switched off	OK		

DATE:	TEST CONDUCTOR	QA	CUSTOMER

Questo documento contiene informazioni di proprietà di CARLO GAVAZZI SPACE SpA. Tutti i diritti sono riservati.
All information contained in this document are property of CARLO GAVAZZI SPACE SpA. All right reserved.

UUT DATA :	Model	Item	C.I.	S/N

STEP n°	TEST SEQUENCE	EXPECTED VALUE	MEASURED VALUE	REMARKS
SC-01.6	Verify that TE is on (with Operational Bus off)	OK		
SC-01.7	Connect the UUT as shown in Figure 6-5	OK		
SC-01.8	Connect main and return power bus lines to power supply through the LISN	OK		
SC-01.9	Set power supply at 120Vdc	120V±1V		
SC-01.10	Switch ON the "power switch "of "power switch box"	OK		
SC-01.11	By remote command the unit in nominal configuration	OK		
SC-01.12	Take note of current absorption from main bus	16,00A<Iin<20,00A		
SC-01.13	Verify by remote that the status of all the boards of the section is OK	OK		
SC-01.14	Start with frequency injection sweep	OK		
SC-01.15	During the test verify the following UUT parameters:			
SC-01.16	using CAN BUS 30 monitor the OK/NOK flags of all the Boards: all the flags shall be in the OK status	OK		CAN BUS 30 Digital status check
SC-01.17	using CAN BUS 31 monitor the OK/NOK flags of all the Boards: all the flags shall be in the OK status	OK		CAN BUS 31 Digital status check
SC-01.18	monitor with the oscilloscope the input current and voltage and the representative secondary output voltage of the following 28V outlets: ER1_N			Annex pictures in the end of document
SC-01.19	Monitor with oscilloscope the following 120V outlet: CCEB 120V			Annex pictures in the end of document
SC-01.20	By remote, using CAN BUS 30 switch OFF ESEM 3-A-1 outlet 1	OK		CAN BUS 30 Digital command check
SC-01.21	By remote, using CAN BUS 31 switch ON ESEM 3-A-1 outlet 1	OK		CAN BUS 31 Digital command check
SC-01.22	Switch Off the "power switch "of "power switch box"	OK		
SC-01.23	Switch off power supply	OK		
SC-01.24	**TEST RUN with capacitor coupling (50kHz÷50MHz)**	OK		

DATE:	TEST CONDUCTOR	QA	CUSTOMER

Questo documento contiene informazioni di proprietà di CARLO GAVAZZI SPACE SpA. Tutti i diritti sono riservati.
All information contained in this document are property of CARLO GAVAZZI SPACE SpA. All right reserved.

UUT DATA :	Model	Item	C.I.	S/N

STEP n°	TEST SEQUENCE	EXPECTED VALUE	MEASURED VALUE	REMARKS
	Verify that UUT and Operational Bus are switched off			
SC-01.25	Verify that TE is on (with Operational Bus off)	OK		
SC-01.26	Connect the UUT as shown in Figure 6-6	OK		
SC-01.27	Connect main and return power bus lines to power supply through the LISN	OK		
SC-01.28	Set power supply at 120Vdc	OK		
SC-01.29	Switch ON the **"power switch "**of **"power switch box"**	120Vdc ± 1Vdc		
SC-01.30	By remote command the unit in nominal configuration			
SC-01.31	Take note of current absorption from main bus	16,00A<Iin<20,00A		
SC-01.32	Verify by remote that the status of all the boards of the section is	OK		
SC-01.33	Start with frequency injection sweep	OK		
SC-01.34	During the test verify the following UUT parameters:			
SC-01.35	using CAN BUS 30 monitor the OK/NOK flags of all the Boards: all the flags shall be in the OK status	OK		CAN BUS 30 Digital status check
SC-01.36	using CAN BUS 31 monitor the OK/NOK flags of all the Boards: all the flags shall be in the OK status	OK		CAN BUS 31 Digital status check
SC-01.37	Monitor with the oscilloscope the input current and voltage and the representative secondary output voltage of the following 28V outlets: TPD3			Annex pictures in the end of document
SC-01.38	Monitor with oscilloscope the following 120V outlet: CCEB 120V			Annex pictures in the end of document
SC-01.39	By remote, using CAN BUS 30 switch OFF ESEM 3-A-1 outlet 1	OK		CAN BUS 30 Digital command check
SC-01.40	By remote, using CAN BUS 31 switch ON ESEM 3-A-1 outlet 1	OK		CAN BUS 31 Digital command check
SC-01.41	Switch Off the "power switch "of "power switch box"	OK		
SC-01.42	Switch off power supply	OK		

DATE:	TEST CONDUCTOR	QA	CUSTOMER

Questo documento contiene informazioni di proprietà di CARLO GAVAZZI SPACE SpA. Tutti i diritti sono riservati.
All information contained in this document are property of CARLO GAVAZZI SPACE SpA. All right reserved.

UUT DATA :	Model	Item	C.I.	S/N

STEP n°	TEST SEQUENCE	EXPECTED VALUE	MEASURED VALUE	REMARKS

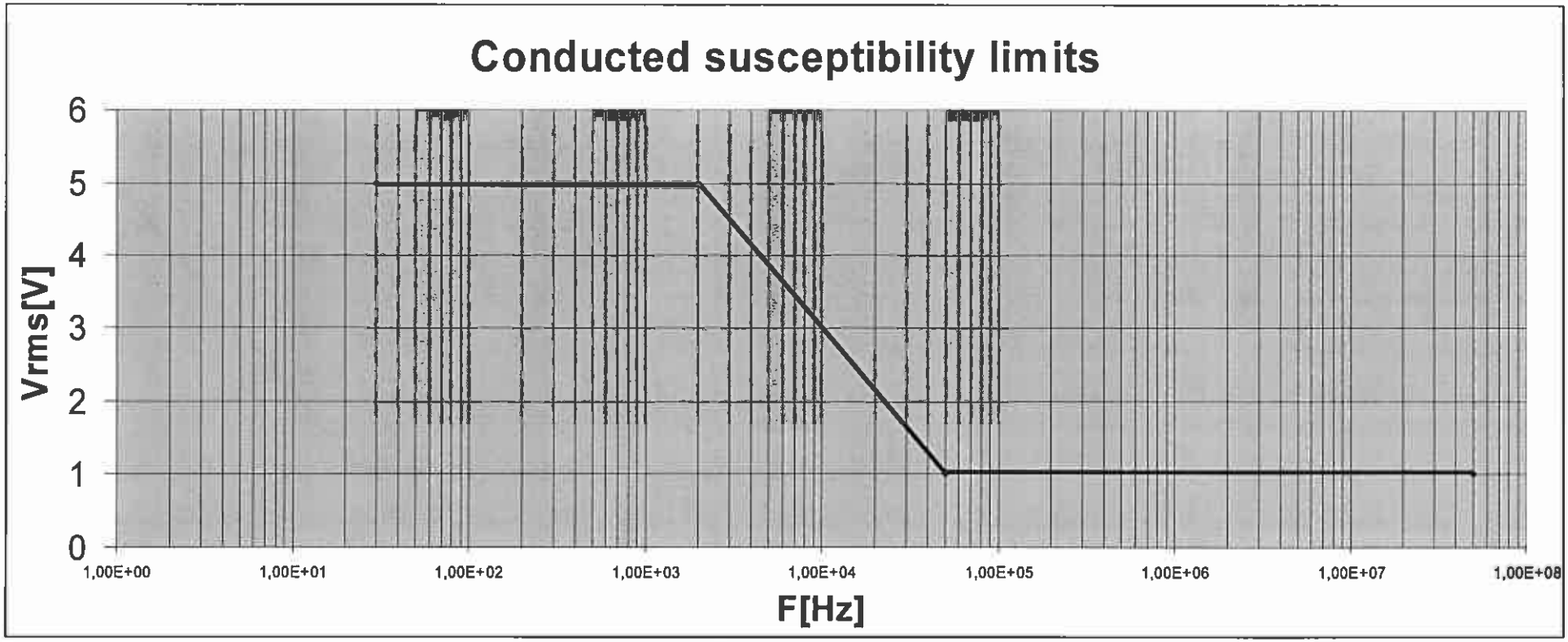

Figure 10-4: Sine Wave Injection Mask

DATE:	TEST CONDUCTOR	QA	CUSTOMER

Questo documento contiene informazioni di proprietà di CARLO GAVAZZI SPACE SpA. Tutti i diritti sono riservati.
All information contained in this document are property of CARLO GAVAZZI SPACE SpA. All right reserved.

UUT DATA :	Model	Item	C.I.	S/N

STEP n°	TEST SEQUENCE	EXPECTED VALUE	MEASURED VALUE	REMARKS

10.4.2 SC-02: INPUT IMPEDANCE

SC-02.1	**OBJECTIVE** To measure the UUT input impedance on 120V Operational feeder. The test is performed at closed box			
SC-02.2	**TEST SET-UP** Test set-up is shown in Figure 6-5 for all the frequency range (50Hz ÷ 100kHz)			
SC-02.3	**TEST FEATURE** The test shall be performed with the same set-up and procedure as per paragraph 10.4.1 , but with the following differences: - the amplitude of the input signal is reduced to have a small signal result. - the frequency range is reduced to 50Hz ÷ 100kHz The test shall be performed on the following UUT Input Power Bus Lines: Operational BUS - J100 (AI_120V (positive)) - J100 (AI_120V_RTN (negative))			
SC-02.4	**IMPEDANCE LIMIT** The load impedance presented by AMS02-PDS unit shall be measured and shall not exceed the limits defined in Figure 10-5 and Figure 10-6.			
SC-02.5	**TEST RUN with transformer coupling (50Hz ÷100kHz)** Verify that UUT and main Bus are switched off	OK		
SC-02.6	Verify that TE is on (with main Bus off)	OK		
SC-02.7	Connect the UUT as shown in Figure 6-5	OK		
SC-02.8	Connect main and return power bus lines to power supply	OK		
SC-02.9	Set power supply to 113Vdc	113V±1V		
SC-02.10	Switch ON the "power switch "of "power switch box"	OK		

DATE:	TEST CONDUCTOR	QA	CUSTOMER

Questo documento contiene informazioni di proprietà di CARLO GAVAZZI SPACE SpA. Tutti i diritti sono riservati.
All information contained in this document are property of CARLO GAVAZZI SPACE SpA. All right reserved.

UUT DATA :	Model	Item	C.I.	S/N

STEP n°	TEST SEQUENCE	EXPECTED VALUE	MEASURED VALUE	REMARKS
SC-02.11	By remote set the unit in nominal configuration	OK		Use CAN BUS 30
SC-02.12	Take note of input current from main bus	16,00A<Iin<20,00A		
SC-02.13	Start with frequency injection sweep	OK		
SC-02.14	During the test measure the following UUT parameters: - Input voltage (AC coupling) - Input current (AC coupling)	OK		
SC-02.15	Plot input impedance (Voltage/Current) both in magnitude and phase and verify that is in compliance with limits.	OK		Annex picture in the end of document
SC-02.16	Set power supply to 120Vdc	120V±1V		Unit still ON in nominal configuration
SC-02.17	Take note of input current from main bus	16,00A<Iin<20,00A		
SC-02.18	Start with frequency injection sweep	OK		
SC-02.19	During the test measure the following UUT parameters: - Input voltage (AC coupling) - Input current (AC coupling)	OK		
SC-02.20	Plot input impedance (Voltage/Current) both in magnitude and phase and verify that is in compliance with limits.	OK		Annex picture in the end of document
SC-02.21	Set power supply to 120Vdc	126V±1V		Unit still ON in nominal configuration
SC-02.22	Take note of input current from main bus	16,00A<Iin<20,00A		
SC-02.23	Start with frequency injection sweep	OK		
SC-02.24	During the test measure the following UUT parameters: - Input voltage (AC coupling) - Input current (AC coupling)	OK		
SC-02.25	Plot input impedance (Voltage/Current) both in magnitude and phase and verify that is in compliance with limits.	OK		Annex picture in the end of document
SC-02.26	Switch Off the "power switch "of "power switch box"	OK		
SC-02.27	Switch off main bus	OK		

DATE:	TEST CONDUCTOR	QA	CUSTOMER

Questo documento contiene informazioni di proprietà di CARLO GAVAZZI SPACE SpA. Tutti i diritti sono riservati.
All information contained in this document are property of CARLO GAVAZZI SPACE SpA. All right reserved.

UUT DATA :	Model	Item	C.I.	S/N

STEP n°	TEST SEQUENCE	EXPECTED VALUE	MEASURED VALUE	REMARKS

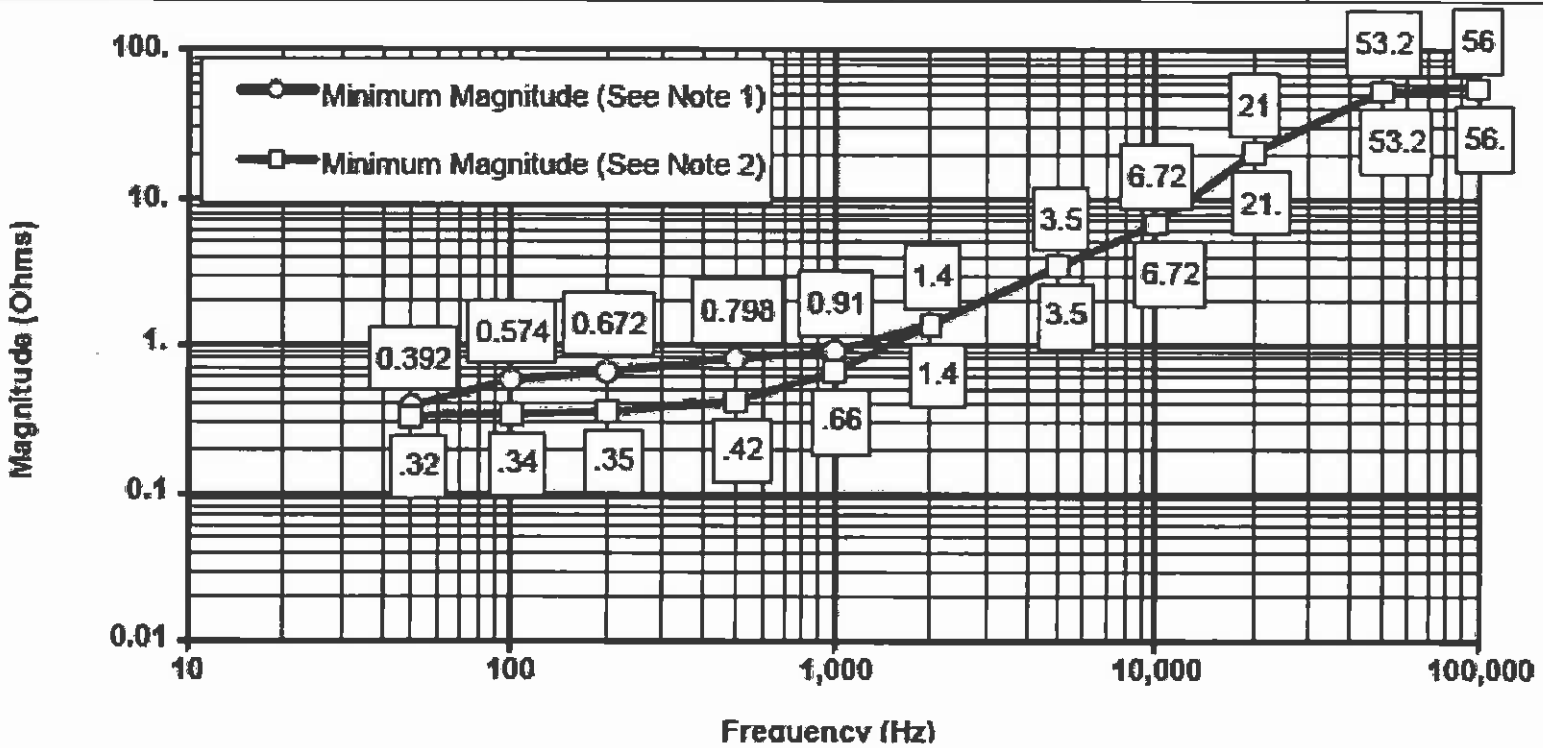

Figure 10-5: Load Impedance Magnitude Limits
(Note 1 and Note 2 are in next picture)

DATE:	TEST CONDUCTOR	QA	CUSTOMER

Questo documento contiene informazioni di proprietà di CARLO GAVAZZI SPACE SpA. Tutti i diritti sono riservati.
All information contained in this document are property of CARLO GAVAZZI SPACE SpA. All right reserved.

UUT DATA :	Model	Item	C.I.	S/N

STEP n°	TEST SEQUENCE	EXPECTED VALUE	MEASURED VALUE	REMARKS

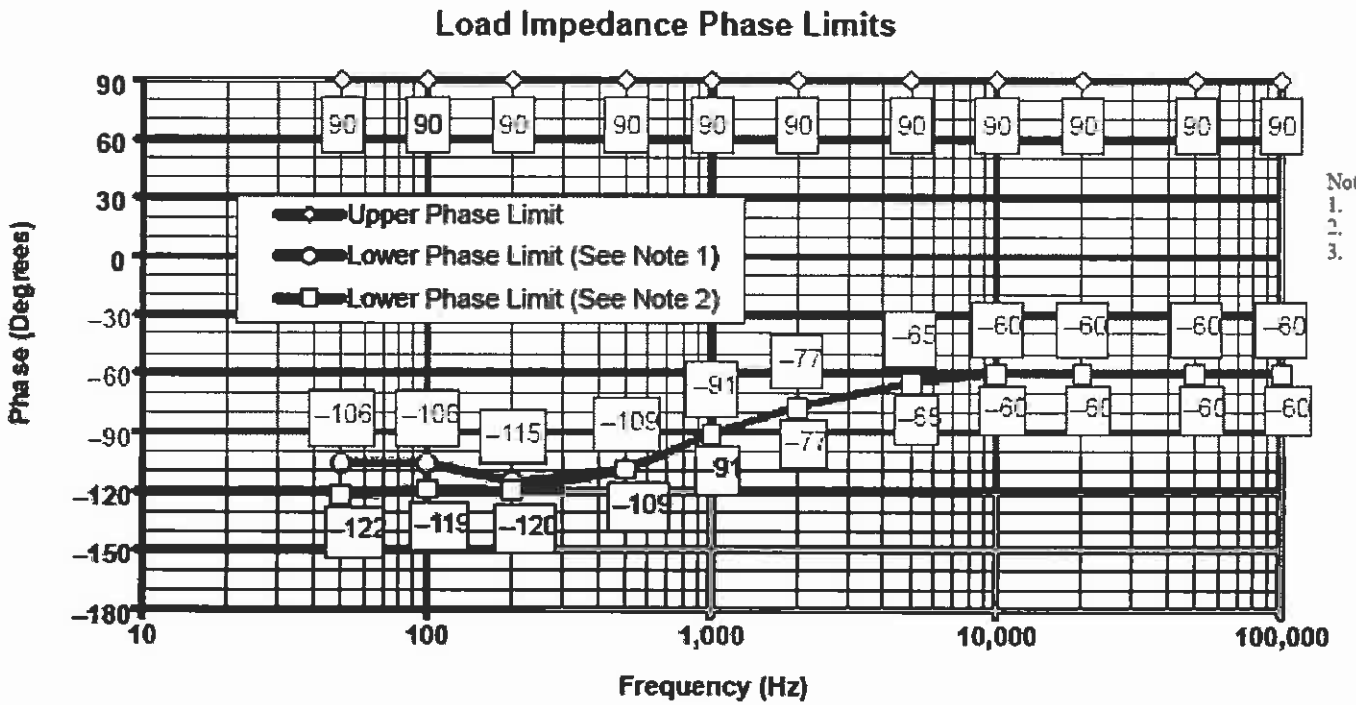

Notes:
1. Limit when steady state EPCE loading is less than 800 watts (see note 3).
2. Limit when steady state EPCE loading is at least 800 watts (see note 3).
3. 800 watts if from two DDCUs operating in parallel, or 400 watts from a single DDCU.

Figure 10-6: Load Impedance Phase Limits

DATE:	TEST CONDUCTOR	QA	CUSTOMER

Questo documento contiene informazioni di proprietà di CARLO GAVAZZI SPACE SpA. Tutti i diritti sono riservati.
All information contained in this document are property of CARLO GAVAZZI SPACE SpA. All right reserved.

UUT DATA :	Model	Item	C.I.	S/N

STEP n°	TEST SEQUENCE	EXPECTED VALUE	MEASURED VALUE	REMARKS

10.4.3 SC-03: VOLTAGE SPIKE TRANSIENTS INJECTION ON DC POWER LINES

SC-03.1	**OBJECTIVE** To verify the UUT immunity from differential mode voltage spike transients injected on input power bus lines. The test is performed at closed box			
SC-03.2	**TEST SET-UP** Test set-up is shown in Figure 6-7: - the current probe shall be positioned as close as possible to UUT input power bus connector (J100) - the voltage probe shall be connected directly on UUT input power bus connector (J100)			

DATE:	TEST CONDUCTOR	QA	CUSTOMER

Questo documento contiene informazioni di proprietà di CARLO GAVAZZI SPACE SpA. Tutti i diritti sono riservati.
All information contained in this document are property of CARLO GAVAZZI SPACE SpA. All right reserved.

UUT DATA :	Model	Item	C.I.	S/N

STEP n°	TEST SEQUENCE	EXPECTED VALUE	MEASURED VALUE	REMARKS
SC-03.3	**TEST FEATURE** Signal Characteristics: - transient shape: see Figure 10-7 - voltage amplitude: ± 120V over power bus voltage (120V) Note: The voltage amplitude generated by the transient generator shall be calibrated on a 5Ω resistance. Then the voltage transient shape shall be applied to the UUT with the same transient generator settings, regardless the actual voltage amplitude applied to the UUT if it is less than 120V. If the actual voltage amplitude applied to the UUT rises over 120V, it shall be limited to 120V by changing the transient generator settings. - duration: 10us and 0.15us - max pulse repetition rate: 10Hz - the spike will be applied for a period not less than 2 minutes in duration - injection method: parallel The test shall be performed on the following UUT Input Power Bus Lines: Operational BUS - J100 (AI_120V (positive)) - J100 (AI_120V_RTN (negative))			
SC-03.4	**SUSCEPTIBILITY CRITERIA** The equipment shall not exhibit any malfunction, degradation of performance or deviation from specified parameters beyond tolerances given by the corresponding specification			
SC-03.5	**TEST RUN: 120V + 120V for 0.15us** Verify that UUT and Operational Bus are switched off	OK		
SC-03.6	Calibrate the spike generator on 5Ω resistance	OK		Annex plot in the end of the document
SC-03.7	Verify that TE is on (with Operational Bus off)	OK		
SC-03.8	Connect the UUT as shown in Figure 6-7	OK		
SC-03.9	Connect main and return power bus lines to power supply through the LISN	OK		

DATE:	TEST CONDUCTOR	QA	CUSTOMER

Questo documento contiene informazioni di proprietà di CARLO GAVAZZI SPACE SpA. Tutti i diritti sono riservati.
All information contained in this document are property of CARLO GAVAZZI SPACE SpA. All right reserved.

UUT DATA :	Model	Item	C.I.	S/N

STEP n°	TEST SEQUENCE	EXPECTED VALUE	MEASURED VALUE	REMARKS
SC-03.10	Set power supply at 120Vdc	OK		
SC-03.11	Switch ON the "power switch "of "power switch box"	120Vdc ± 1Vdc		
SC-03.12	By remote set the unit in nominal configuration	OK		USE CAN BUS 30
SC-03.13	Take note of input current	16,00A<Iin<20,00A		
SC-03.14	Apply the voltage transient shape	OK		
SC-03.15	During the test verify the following UUT parameters:	OK		
SC-03.16	With CAN BUS 30 Monitor the OK/NOK flags of all the Power Boards. All the flags shall be in the OK status	OK		
SC-03.17	With CAN BUS 31 Monitor the OK/NOK flags of all the Power Boards. All the flags shall be in the OK status	OK		
SC-03.18	Monitor with the oscilloscope the following signals: Input bus TPD3 CCEB (120V outlet)	OK		Annex picture in the end of document
SC-03.19	Using CAN BUS 30 switch ON by remote, in ESEM 3-A-1 window, the outlet 6	OK		CAN BUS 30 digital command check during spike transients
SC-03.20	Verify that command is correctly executed	OK		
SC-03.21	Using CAN BUS 31 switch OFF by remote, in ESEM 3-A-1 window, the outlet 6	OK		CAN BUS 31 digital command check during spike transients
SC-03.22	Verify that command is correctly executed	OK		
SC-03.23	Stop voltage spikes injection	OK		Voltage spike injection duration at least two minutes
SC-03.24	Switch OFF the "power switch "of "power switch box"	OK		
SC-03.25	Switch OFF main bus	OK		
SC-03.26	**TEST RUN: 120V + 120V for 10us** Verify that UUT and Operational Bus are switched off	OK		
SC-03.27	Calibrate the spike generator on 5Ω resistance	OK		Annex plot in the end of the document

DATE:	TEST CONDUCTOR	QA	CUSTOMER

Questo documento contiene informazioni di proprietà di CARLO GAVAZZI SPACE SpA. Tutti i diritti sono riservati.
All information contained in this document are property of CARLO GAVAZZI SPACE SpA. All right reserved.

UUT DATA :	Model	Item	C.I.	S/N

STEP n°	TEST SEQUENCE	EXPECTED VALUE	MEASURED VALUE	REMARKS
SC-03.28	Verify that TE is on (with Operational Bus off)	OK		
SC-03.29	Connect the UUT as shown in Figure 6-7	OK		
SC-03.30	Connect main and return power bus lines to power supply through the LISN	OK		
SC-03.31	Set power supply at 120Vdc	OK		
SC-03.32	Switch ON the "power switch "of "power switch box"	120Vdc ± 1Vdc		
SC-03.33	By remote set the unit in nominal configuration	OK		USE CAN BUS 30
SC-03.34	Take note of input current	16,00A<Iin<20,00A		
SC-03.35	Apply the voltage transient shape	OK		
SC-03.36	During the test verify the following UUT parameters:	OK		
SC-03.37	With CAN BUS 30 Monitor the OK/NOK flags of all the Power Boards. All the flags shall be in the OK status	OK		
SC-03.38	With CAN BUS 31 Monitor the OK/NOK flags of all the Power Boards. All the flags shall be in the OK status	OK		
SC-03.39	Monitor with the oscilloscope the following signals: Input bus TPD3 CCEB (120V outlet)	OK		Annex picture in the end of document
SC-03.40	Using CAN BUS 30 switch ON by remote, in ESEM 3-A-1 window, the outlet 6	OK		CAN BUS 30 digital command check during spike transients
SC-03.41	Verify that command is correctly executed	OK		
SC-03.42	Using CAN BUS 31 switch OFF by remote, in ESEM 3-A-1 window, the outlet 6	OK		CAN BUS 31 digital command check during spike transients
SC-03.43	Verify that command is correctly executed	OK		
SC-03.44	Stop voltage spikes injection	OK		Voltage spike injection duration at least two minutes
SC-03.45	Switch OFF the "power switch "of "power switch box"	OK		
SC-03.46	Switch OFF main bus	OK		

DATE:	TEST CONDUCTOR	QA	CUSTOMER

Questo documento contiene informazioni di proprietà di CARLO GAVAZZI SPACE SpA. Tutti i diritti sono riservati.
All information contained in this document are property of CARLO GAVAZZI SPACE SpA. All right reserved.

UUT DATA :	Model	Item	C.I.	S/N

STEP n°	TEST SEQUENCE	EXPECTED VALUE	MEASURED VALUE	REMARKS
SC-03.47	**TEST RUN: 120V - 120V for 0.15us** Verify that UUT and Operational Bus are switched off	OK		
SC-03.48	Calibrate the spike generator on 5Ω resistance	OK		Annex plot in the end of the document
SC-03.49	Verify that TE is on (with Operational Bus off)	OK		
SC-03.50	Connect the UUT as shown in Figure 6-7	OK		
SC-03.51	Connect main and return power bus lines to power supply through the LISN	OK		
SC-03.52	Set power supply at 120Vdc	OK		
SC-03.53	Switch ON the "power switch "of "power switch box"	120Vdc ± 1Vdc		
SC-03.54	By remote set the unit in nominal configuration	OK		USE CAN BUS 30
SC-03.55	Take note of input current	16,00A<Iin<20,00A		
SC-03.56	Apply the voltage transient shape	OK		
SC-03.57	During the test verify the following UUT parameters:	OK		
SC-03.58	With CAN BUS 30 Monitor the OK/NOK flags of all the Power Boards. All the flags shall be in the OK status	OK		
SC-03.59	With CAN BUS 31 Monitor the OK/NOK flags of all the Power Boards. All the flags shall be in the OK status	OK		
SC-03.60	Monitor with the oscilloscope the following signals: Input bus TPD3 CCEB (120V outlet)	OK		Annex picture in the end of document
SC-03.61	Using CAN BUS 30 switch ON by remote, in ESEM 3-A-1 window, the outlet 6	OK		CAN BUS 30 digital command check during spike transients
SC-03.62	Verify that command is correctly executed	OK		
SC-03.63	Using CAN BUS 31 switch OFF by remote, in ESEM 3-A-1 window, the outlet 6	OK		CAN BUS 31 digital command check during spike transients
SC-03.64	Verify that command is correctly executed	OK		
SC-03.65	Stop voltage spikes injection	OK		Voltage spike injection duration at least

DATE:	TEST CONDUCTOR	QA	CUSTOMER

Questo documento contiene informazioni di proprietà di CARLO GAVAZZI SPACE SpA. Tutti i diritti sono riservati.
All information contained in this document are property of CARLO GAVAZZI SPACE SpA. All right reserved.

UUT DATA :	Model	Item	C.I.	S/N

STEP n°	TEST SEQUENCE	EXPECTED VALUE	MEASURED VALUE	REMARKS
				two minutes
SC-03.66	Switch OFF the "power switch "of "power switch box"	OK		
SC-03.67	Switch OFF main bus	OK		
SC-03.68	**TEST RUN: 120V - 120V for 10us** Verify that UUT and Operational Bus are switched off	OK		
SC-03.69	Calibrate the spike generator on 5Ω resistance	OK		Annex plot in the end of the document
SC-03.70	Verify that TE is on (with Operational Bus off)	OK		
SC-03.71	Connect the UUT as shown in Figure 6-7	OK		
SC-03.72	Connect main and return power bus lines to power supply through the LISN	OK		
SC-03.73	Set power supply at 120Vdc	OK		
SC-03.74	Switch ON the "power switch "of "power switch box"	120Vdc ± 1Vdc		
SC-03.75	By remote set the unit in nominal configuration	OK		USE CAN BUS 30
SC-03.76	Take note of input current	16,00A<Iin<20,00A		
SC-03.77	Apply the voltage transient shape	OK		
SC-03.78	During the test verify the following UUT parameters:	OK		
SC-03.79	With CAN BUS 30 Monitor the OK/NOK flags of all the Power Boards. All the flags shall be in the OK status	OK		
SC-03.80	With CAN BUS 31 Monitor the OK/NOK flags of all the Power Boards. All the flags shall be in the OK status	OK		
SC-03.81	Monitor with the oscilloscope the following signals: Input bus TPD3 CCEB (120V outlet)	OK		Annex picture in the end of document
SC-03.82	Using CAN BUS 30 switch ON by remote, in ESEM 3-A-1 window, the outlet 6	OK		CAN BUS 30 digital command check during spike transients
SC-03.83	Verify that command is correctly executed	OK		
SC-03.84	Using CAN BUS 31 switch OFF by remote, in ESEM 3-A-1 window, the outlet 6	OK		CAN BUS 31 digital command check

DATE:	TEST CONDUCTOR	QA	CUSTOMER

Questo documento contiene informazioni di proprietà di CARLO GAVAZZI SPACE SpA. Tutti i diritti sono riservati.
All information contained in this document are property of CARLO GAVAZZI SPACE SpA. All right reserved.

UUT DATA :	Model	Item	C.I.	S/N

STEP n°	TEST SEQUENCE	EXPECTED VALUE	MEASURED VALUE	REMARKS
				during spike transients
SC-03.85	Verify that command is correctly executed	OK		
SC-03.86	Stop voltage spikes injection	OK		Voltage spike injection duration at least two minutes
SC-03.87	Switch OFF the "power switch "of "power switch box"	OK		
SC-03.88	Switch OFF main bus	OK		
SC-03.89	Switch OFF main bus	OK		

DATE:	TEST CONDUCTOR	QA	CUSTOMER

Questo documento contiene informazioni di proprietà di CARLO GAVAZZI SPACE SpA. Tutti i diritti sono riservati.
All information contained in this document are property of CARLO GAVAZZI SPACE SpA. All right reserved.

UUT DATA :	Model	Item	C.I.	S/N

STEP n°	TEST SEQUENCE	EXPECTED VALUE	MEASURED VALUE	REMARKS

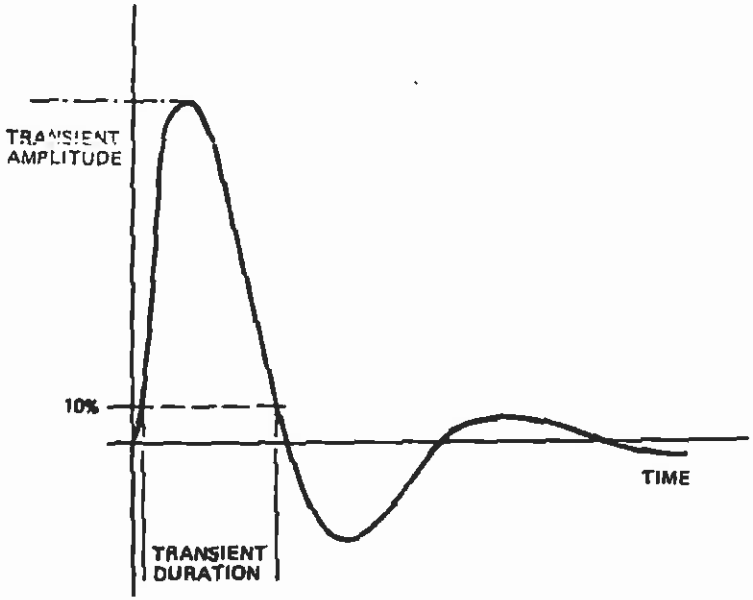

Figure 10-7: Transient Injection Mask

DATE:	TEST CONDUCTOR	QA	CUSTOMER

Questo documento contiene informazioni di proprietà di CARLO GAVAZZI SPACE SpA. Tutti i diritti sono riservati.
All information contained in this document are property of CARLO GAVAZZI SPACE SpA. All right reserved.

UUT DATA :	Model	Item	C.I.	S/N

STEP n°	TEST SEQUENCE	EXPECTED VALUE	MEASURED VALUE	REMARKS

10.4.4 SC-04: NORMAL VOLTAGE TRANSIENT INJECTION ON DC POWER LINES

SC-04.1	**OBJECTIVE** To verify the UUT immunity from normal input bus transients The test is performed at closed box			
SC-04.2	**TEST SET-UP** Test set-up is shown in Figure 6-8 - the current probe shall be positioned as close as possible to UUT input power bus connector (J100) - the voltage probe shall be connected directly on UUT input power bus connector (J100)			
SC-04.3	**TEST FEATURE** *Signal Characteristics:* - transient shape: see Figure 10-8 - voltage amplitude: see Figure 10-8 - injection method: series The test shall be performed on the following UUT Input Power Bus Lines: Operational BUS - J100 (AI_120V (positive)) - J100 (AI_120V_RTN (negative))			
SC-04.4	**SUSCEPTIBILITY CRITERIA** The equipment shall not exhibit any malfunction, degradation of performance or deviation from specified parameters beyond tolerances given by the corresponding specification			
SC-04.5	**TEST RUN (Positive Shape)** Verify that UUT and Operational Bus are switched off	OK		
SC-04.6	Verify that TE is on (with Operational Bus off)	OK		
SC-04.7	Connect the UUT as shown in Figure 6-8	OK		

DATE:	TEST CONDUCTOR	QA	CUSTOMER

Questo documento contiene informazioni di proprietà di CARLO GAVAZZI SPACE SpA. Tutti i diritti sono riservati.
All information contained in this document are property of CARLO GAVAZZI SPACE SpA. All right reserved.

UUT DATA :	Model	Item	C.I.	S/N

STEP n°	TEST SEQUENCE	EXPECTED VALUE	MEASURED VALUE	REMARKS
SC-04.8	Connect main and return power bus lines to power supply through the LISN	OK		
SC-04.9	Set power supply at 126Vdc	126Vdc ± 1Vdc		
SC-04.10	Switch ON the "power switch "of "power switch box"	OK		
SC-04.11	By remote set the unit in nominal configuration	OK		
SC-04.12	Take note of input current	16,00A<Iin<20,00A		
SC-04.13	Apply the positive voltage shape to the UUT	OK		
SC-04.14	During voltage shape applying, acquire with the oscilloscope the following signals: Input bus TPD3 CCEB (120V outlet)	OK		Annex picture in the end of document
SC-04.15	With CAN BUS 30 Monitor the OK/NOK flags of all the Power Boards. All the flags shall be in the OK status	OK		
SC-04.16	With CAN BUS 31 Monitor the OK/NOK flags of all the Power Boards. All the flags shall be in the OK status	OK		
SC-04.17	Using CAN BUS 30 switch ON by remote, in ESEM 3-A-1 window, the outlet 6	OK		CAN BUS 30 digital command check
SC-04.18	Verify that command is correctly executed	OK		
SC-04.19	Using CAN BUS 31 switch OFF by remote, in ESEM 3-A-1 window, the outlet 6	OK		CAN BUS 31 digital command check
SC-04.20	Verify that command is correctly executed	OK		
SC-04.21	Switch OFF the "power switch "of "power switch box"	OK		
SC-04.22	Switch OFF main bus	OK		
SC-04.23	Prepare the instrumentation for negative voltage shape	OK		
SC-04.24	Switch ON main bus	OK		
SC-04.25	Set main bus to 112.5V	112.5V ± 1V		
SC-04.26	Switch ON the "power switch "of "power switch box"	OK		
SC-04.27	By remote set the unit in nominal configuration	OK		
SC-04.28	Take note of input current	16,00A<Iin<20,00A		

DATE:	TEST CONDUCTOR	QA	CUSTOMER

Questo documento contiene informazioni di proprietà di CARLO GAVAZZI SPACE SpA. Tutti i diritti sono riservati.
All information contained in this document are property of CARLO GAVAZZI SPACE SpA. All right reserved.

UUT DATA :	Model	Item	C.I.	S/N

STEP n°	TEST SEQUENCE	EXPECTED VALUE	MEASURED VALUE	REMARKS
SC-04.29	Apply the negative voltage shape to the UUT	OK		
SC-04.30	During voltage shape applying, acquire with the oscilloscope the following signals: Input bus TPD3 CCEB (120V outlet)	OK		Annex picture in the end of document
SC-04.31	With CAN BUS 30 Monitor the OK/NOK flags of all the Power Boards. All the flags shall be in the OK status	OK		
SC-04.32	With CAN BUS 31 Monitor the OK/NOK flags of all the Power Boards. All the flags shall be in the OK status	OK		
SC-04.33	Using CAN BUS 30 switch ON by remote, in ESEM 3-A-1 window, the outlet 6	OK		CAN BUS 30 digital command check
SC-04.34	Verify that command is correctly executed	OK		
SC-04.35	Using CAN BUS 31 switch OFF by remote, in ESEM 3-A-1 window, the outlet 6	OK		CAN BUS 31 digital command check
SC-04.36	Verify that command is correctly executed	OK		
SC-04.37	Switch OFF the "power switch "of "power switch box"	OK		
SC-04.38	Switch OFF main bus	OK		

DATE:	TEST CONDUCTOR	QA	CUSTOMER

Questo documento contiene informazioni di proprietà di CARLO GAVAZZI SPACE SpA. Tutti i diritti sono riservati.
All information contained in this document are property of CARLO GAVAZZI SPACE SpA. All right reserved.

UUT DATA :	Model	Item	C.I.	S/N

STEP n°	TEST SEQUENCE	EXPECTED VALUE	MEASURED VALUE	REMARKS

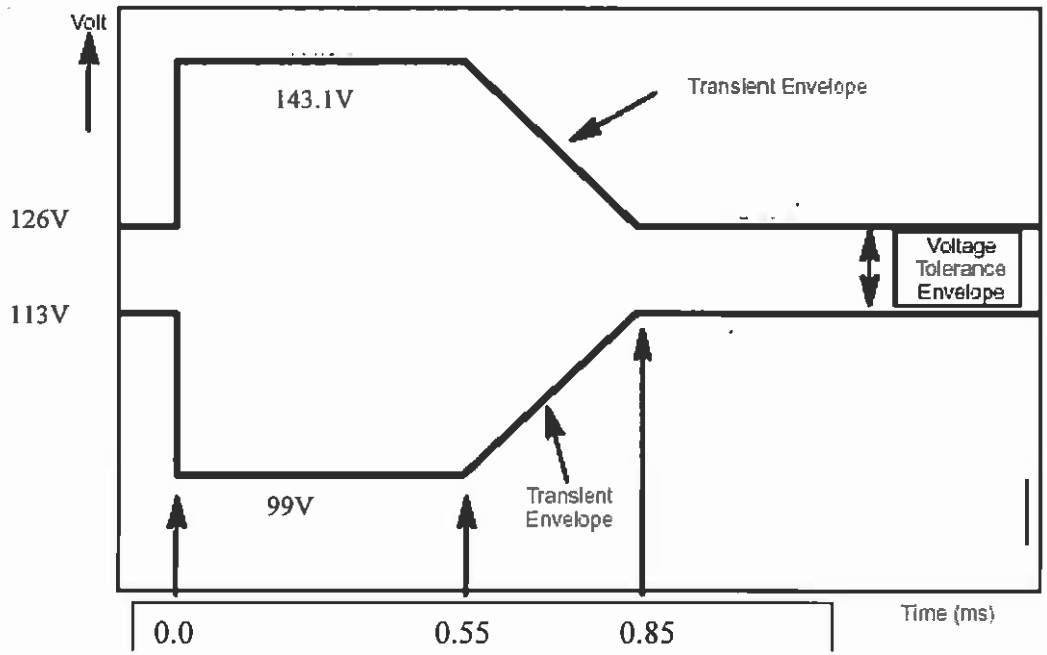

Figure 10-8: Normal Transient Mask

DATE:	TEST CONDUCTOR	QA	CUSTOMER

Questo documento contiene informazioni di proprietà di CARLO GAVAZZI SPACE SpA. Tutti i diritti sono riservati.
All information contained in this document are property of CARLO GAVAZZI SPACE SpA. All right reserved.

UUT DATA :	Model	Item	C.I.	S/N

STEP n°	TEST SEQUENCE	EXPECTED VALUE	MEASURED VALUE	REMARKS

10.4.5 SC-05: ABNORMAL VOLTAGE TRANSIENT

SC-05.1	**OBJECTIVE** To verify the UUT immunity from input bus abnormal voltage transient The test is performed at closed box			
SC-05.2	**TEST SET-UP** Test set up is shown in Figure 6-8 - the current probe shall be positioned as close as possible to UUT input power bus connector - the voltage probe shall be connected directly on UUT input power bus connector			
SC-05.3	**TEST FEATURE** *Signal Characteristics:* - transient shape and voltage: see Figure 10-9 - injection method: series **Note:** since the transient generator available at the test facility is not able to generate the complete transient shape shown in Fig.10-10, *the test shall be performed splitting the transient in different parts, which will be annexed in the end of the document. The final envelope given by the different parts shall ensure to cover the limit mask.* The test shall be performed on the following UUT Input Power Bus Lines: Operational BUS - J100 connector, positive power bus line AI_120V - J100 connector, negative power bus line AI_120V_RTN			

DATE:	TEST CONDUCTOR	QA	CUSTOMER

Questo documento contiene informazioni di proprietà di CARLO GAVAZZI SPACE SpA. Tutti i diritti sono riservati.
All information contained in this document are property of CARLO GAVAZZI SPACE SpA. All right reserved.

UUT DATA :	Model	Item	C.I.	S/N

STEP n°	TEST SEQUENCE	EXPECTED VALUE	MEASURED VALUE	REMARKS
SC-05.4	**SUSCEPTIBILITY CRITERIA** No permanent degradation and no failure propagation across the UUT interfaces shall result. The downward shape causes the UUT switching-off because of the input under voltage protection intervention: in this case at the following switching-on the UUT must not show any performance degradation. The same will happen for the positive peak, when voltage protection set to 150V ± 2V switches off the unit . After switch ON the UUT must not show any performance degradation.			
SC-05.5	**TEST RUN (Downward Shape – first part of the transient shape)** Verify that UUT and Operational Bus are switched off	OK		
SC-05.6	Verify that TE is on (with Operational Bus off)	OK		
SC-05.7	Connect the UUT as shown in Figure 6-8	OK		
SC-05.8	Connect main and return power bus lines to power supply through the LISN	OK		
SC-05.9	By remote set the unit in nominal configuration	OK		
SC-05.10	Take note of input current	16,00A<Iin<20,00A		Main bus set to 126V
SC-05.11	Apply the positive voltage spikes described in Figure 10-9	OK		Every spike must be applied with unit ON. Every spike generated on input bus will be monitored and annexed In the end of the document.
SC-05.12	From remote, with CAN BUS 30 monitor the OK/NOK flags of all the Power Boards. All the flags shall be in the OK status	OK		CAN BUS 30 check
SC-05.13	From remote, with CAN BUS 31 monitor the OK/NOK flags of all the Power Boards. All the flags shall be in the OK status	OK		CAN BUS 31 check
SC-05.14	Using CAN BUS 31 switch ON by remote, in ESEM 3-A-1 window, the outlet 6	OK		CAN BUS 31 digital command check
SC-05.15	Verify that command is correctly executed	OK		
SC-05.16	Using CAN BUS 31 switch OFF by remote, in ESEM 3-A-1 window, the outlet 6	OK		CAN BUS 31 digital command check

DATE:	TEST CONDUCTOR	QA	CUSTOMER

Questo documento contiene informazioni di proprietà di CARLO GAVAZZI SPACE SpA. Tutti i diritti sono riservati.
All information contained in this document are property of CARLO GAVAZZI SPACE SpA. All right reserved.

UUT DATA :	Model	Item	C.I.	S/N

STEP n°	TEST SEQUENCE	EXPECTED VALUE	MEASURED VALUE	REMARKS
SC-05.17	Verify that command is correctly executed	OK		
SC-05.18	Set the main bus to 113V and take note of input current	OK		
SC-05.19	Apply the negative voltage spikes described in Figure 10-9	OK		Every spike must be applied with unit ON. Every spike generated on input bus will be monitored and annexed In the end of the document.
SC-05.20	From remote, with CAN BUS 30 monitor the OK/NOK flags of all the Power Boards. All the flags shall be in the OK status	OK		CAN BUS 30 check
SC-05.21	From remote, with CAN BUS 31 monitor the OK/NOK flags of all the Power Boards. All the flags shall be in the OK status	OK		CAN BUS 31 check
SC-05.22	Using CAN BUS 31 switch ON by remote, in ESEM 3-A-1 window, the outlet 6	OK		CAN BUS 31 digital command check
SC-05.23	Verify that command is correctly executed	OK		
SC-05.24	Using CAN BUS 31 switch OFF by remote, in ESEM 3-A-1 window, the outlet 6	OK		CAN BUS 31 digital command check
SC-05.25	Verify that command is correctly executed			
SC-05.26	Switch off the unit			

DATE:	TEST CONDUCTOR	QA	CUSTOMER

Questo documento contiene informazioni di proprietà di CARLO GAVAZZI SPACE SpA. Tutti i diritti sono riservati.
All information contained in this document are property of CARLO GAVAZZI SPACE SpA. All right reserved.

UUT DATA :	Model	Item	C.I.	S/N

STEP n°	TEST SEQUENCE	EXPECTED VALUE	MEASURED VALUE	REMARKS

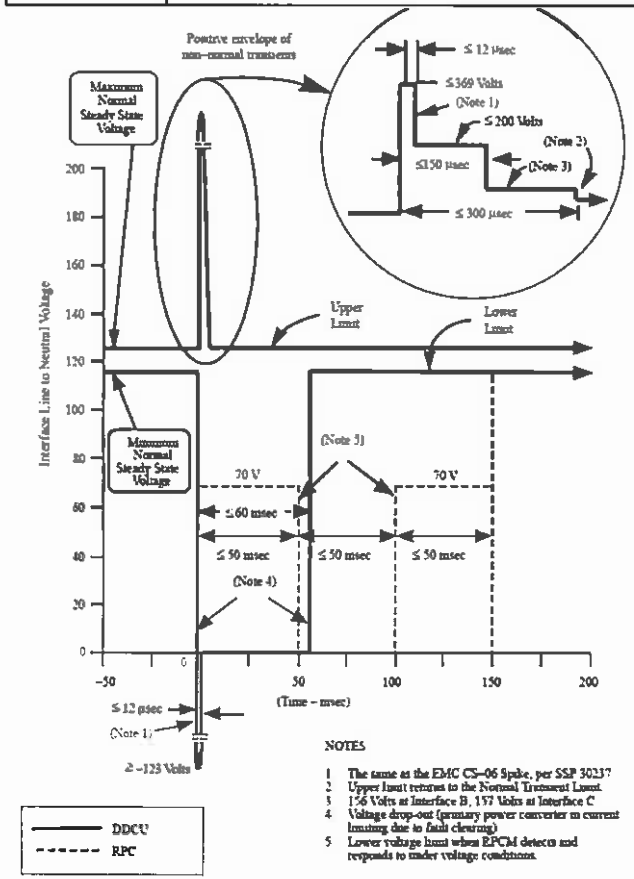

Figure 10-9: Abnormal Voltage Transient Mask

DATE:	TEST CONDUCTOR	QA	CUSTOMER

Questo documento contiene informazioni di proprietà di CARLO GAVAZZI SPACE SpA. Tutti i diritti sono riservati.
All information contained in this document are property of CARLO GAVAZZI SPACE SpA. All right reserved.

UUT DATA :	Model	Item	C.I.	S/N

STEP n°	TEST SEQUENCE	EXPECTED VALUE	MEASURED VALUE	REMARKS

10.4.6 LARGE SIGNAL STABILITY

LSS-0.1	**OBJECTIVE** To verify the UUT capability of maintaining stability with the APM interface by damping a transient response to 10% of the maximum response amplitude within 1 ms, and remaining below 10% thereafter under the following conditions: - The rise time / fall time (between 10% and 90% of the amplitude) of the input voltage pulse is less than 10 us - The voltage pulse is varied from 100 us to 150 us in duration The test shall be performed at closed box			
LSS-0.2	**TEST SET-UP** Test set-up is shown in Figure 6-8; the voltage probe shall be connected directly on UUT input power bus connector			
LSS-0.3	**TEST FEATURE** *Signal Characteristics:* - Transient shape: see Figure 10-10 - Voltage amplitude: see Figure 10-10 - injection method: series The test shall be performed on the following UUT Input Power Bus Lines: Operational BUS - J100 (AI_120V (positive)) - J100 (AI_120V_RTN (negative))			

DATE:	TEST CONDUCTOR	QA	CUSTOMER

Questo documento contiene informazioni di proprietà di CARLO GAVAZZI SPACE SpA. Tutti i diritti sono riservati.
All information contained in this document are property of CARLO GAVAZZI SPACE SpA. All right reserved.

UUT DATA :	Model	Item	C.I.	S/N

STEP n°	TEST SEQUENCE	EXPECTED VALUE	MEASURED VALUE	REMARKS
LSS-0.4	**SUSCEPTIBILITY CRITERIA** The integrated external payload shall maintain stability with the APM interface by damping a transient response to 10% of the maximum response amplitude within 1 ms, and remaining below 10% thereafter under the following conditions: - The rise time / fall time (between 10% and 90% of the amplitude) of the input voltage pulse is less than 10 us - The voltage pulse is to be varied from 100 us to 150 us in duration The above requirements are clarified by Figure 10-10 No permanent degradation and no failure propagation across the UUT interfaces shall result			
LSS-0.5	**TEST RUN** Verify that UUT and Operational Bus are switched off	OK		
LSS-0.6	Verify that TE is on (with Operational Bus off)	OK		
LSS-0.7	Connect the UUT as shown in Figure 6-8	OK		
LSS-0.8	Connect the oscilloscope to 28V outlets: TPD3 And to CCEB (120v outlet)	OK		
LSS-0.9	Connect main and return power bus lines to power supply through the LISN	OK		
LSS-0.10	Set power supply at 120Vdc	OK		
LSS-0.11	Switch ON the "power switch "of "power switch box"	OK		
LSS-0.12	Set the unit in nominal configuration	OK		
LSS-0.13	Take note of input current	16,00A<Iin<20,00A		
LSS-0.14	Apply the voltage pulse with 100uS duration	OK		
LSS-0.15	Verify with oscilloscope that the transient response diminish to 10% of the maximum amplitude within 1mS and remains below 10% thereafter (see Figure 10-10)	OK		Annex picture in the end of the document

DATE:	TEST CONDUCTOR	QA	CUSTOMER

Questo documento contiene informazioni di proprietà di CARLO GAVAZZI SPACE SpA. Tutti i diritti sono riservati.
All information contained in this document are property of CARLO GAVAZZI SPACE SpA. All right reserved.

UUT DATA :	Model	Item	C.I.	S/N

STEP n°	TEST SEQUENCE	EXPECTED VALUE	MEASURED VALUE	REMARKS
LSS-0.16	Acquire with oscilloscope the signals: TPD3 ESEM 3-B out 1 (120v outlet)	OK		Annex picture in the end of the document
LSS-0.17	From remote, with CAN BUS 30 monitor the OK/NOK flags of all the Power Boards. All the flags shall be in the OK status	OK		CAN BUS 30 check
LSS-0.18	From remote, with CAN BUS 31 monitor the OK/NOK flags of all the Power Boards. All the flags shall be in the OK status	OK		CAN BUS 31 check
LSS-0.19	Apply the voltage pulse with 150uS duration	OK		
LSS-0.20	Verify with oscilloscope that the transient response diminish to 10% of the maximum amplitude within 1mS and remains below 10% thereafter (see Figure 10-10)	OK		Annex picture in the end of the document
LSS-0.21	Acquire with oscilloscope the signals: TPD3 ESEM 3-B out 1 (120v outlet)	OK		Annex picture in the end of the document
LSS-0.22	From remote, with CAN BUS 30 monitor the OK/NOK flags of all the Power Boards. All the flags shall be in the OK status	OK		CAN BUS 30 check
LSS-0.23	From remote, with CAN BUS 31 monitor the OK/NOK flags of all the Power Boards. All the flags shall be in the OK status	OK		CAN BUS 31 check
LSS-0.24	Switch Off the "power switch "of "power switch box"	OK		
LSS-0.25	Switch Off main bus	OK		

DATE:	TEST CONDUCTOR	QA	CUSTOMER

Questo documento contiene informazioni di proprietà di CARLO GAVAZZI SPACE SpA. Tutti i diritti sono riservati.
All information contained in this document are property of CARLO GAVAZZI SPACE SpA. All right reserved.

UUT DATA :	Model	Item	C.I.	S/N

STEP n°	TEST SEQUENCE	EXPECTED VALUE	MEASURED VALUE	REMARKS

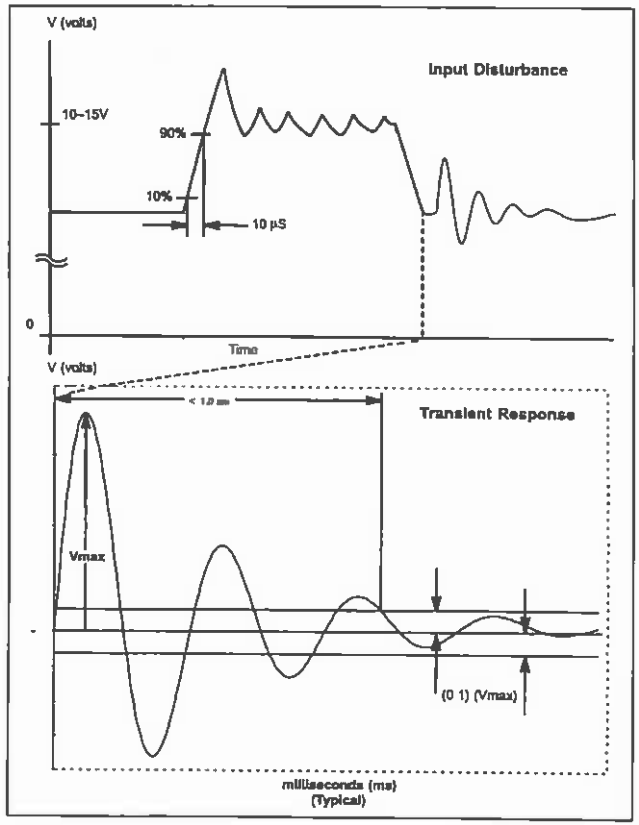

Figure 10-10: Pulse applied to the power input of the integrated external payload load

DATE:	TEST CONDUCTOR	QA	CUSTOMER

Questo documento contiene informazioni di proprietà di CARLO GAVAZZI SPACE SpA. Tutti i diritti sono riservati.
All information contained in this document are property of CARLO GAVAZZI SPACE SpA. All right reserved.

UUT DATA :	Model	Item	C.I.	S/N

STEP n°	TEST SEQUENCE	EXPECTED VALUE	MEASURED VALUE	REMARKS

10.5 SECTION "B" CONDUCTED SUSCEPTIBILITY

10.5.1 SC-01: SINE WAVE INJECTION ON INPUT DC POWER SUPPLY

SC-01.1	<u>OBJECTIVE</u> To verify the UUT immunity from sine wave differential mode noise injected on input power bus lines. The test is performed at closed box			
SC-01.2	<u>**TEST SET-UPS**</u> Test set-ups are shown in: -Figure 6-5 for frequency range 30Hz ÷50kHz Figure 6-6 for frequency range 50kHz ÷50MHz			Heaters not connected Set loads in nominal configuration

SC-01.3	<u>**TEST FEATURE**</u>
	Signal Characteristics:
	- frequency range: see Figure 10-4
	- voltage amplitude: see Figure 10-4
	- injection method:
	  - series/transformer for 30Hz ÷50kHz range
	  - parallel/capacitor (Xc lower than 5Ω over freq. range) for 50kHz ÷50MHz
	- sweep mode: sweep
	
	The test shall be performed on the following UUT Input Power Bus Lines:
	<u>Operational BUS</u>
	- J200 connector hot (+) power bus line
	- J200 connector return (-) power bus line			

DATE:	TEST CONDUCTOR	QA	CUSTOMER

Questo documento contiene informazioni di proprietà di CARLO GAVAZZI SPACE SpA. Tutti i diritti sono riservati.
All information contained in this document are property of CARLO GAVAZZI SPACE SpA. All right reserved.

UUT DATA :	Model	Item	C.I.	S/N

STEP n°	TEST SEQUENCE	EXPECTED VALUE	MEASURED VALUE	REMARKS
SC-01.4	**SUSCEPTIBILITY CRITERIA** The equipment shall not exhibit any malfunction, degradation of performance or deviation from specified parameters beyond tolerances given by the corresponding specification From 30Hz up to 50KHz the requirement is also met when the audio power source adjusted to dissipate 50 Watts in a 0.5 ohm load, cannot develop the required voltage at the EUT power input terminals, and the EUT is not susceptible to the output of the signal source. From 50KHz up to 50MHz the requirement is also met under the following condition: A 1 Watt source of 50 ohms impedance cannot develop the required voltage at the EUT power input terminals, and the EUT is not susceptible to the output of the signal source.			
SC-01.5	**TEST RUN with transformer coupling (30Hz÷50kHz)** Verify that UUT and Operational Bus are switched off	OK		
SC-01.6	Verify that TE is on (with Operational Bus off)	OK		
SC-01.7	Connect the UUT as shown in Figure 6-5	OK		
SC-01.8	Set power supply at 120Vdc	120V±1V		
SC-01.9	Switch ON the "power switch "of "power switch box"	OK		
SC-01.10	By remote command the unit in nominal configuration	OK		
SC-01.11	Take note of current absorption from main bus	16,00A<Iin<20,00A		
SC-01.12	Verify by remote that the status of all the boards of the section is OK	OK		
SC-01.13	Start with frequency injection sweep	OK		
SC-01.14	During the test verify the following UUT parameters:	OK		
SC-01.15	using CAN BUS 30 monitor the OK/NOK flags of all the Boards: all the flags shall be in the OK status	OK		CAN BUS 30 Digital status check

DATE:	TEST CONDUCTOR	QA	CUSTOMER

Questo documento contiene informazioni di proprietà di CARLO GAVAZZI SPACE SpA. Tutti i diritti sono riservati.
All information contained in this document are property of CARLO GAVAZZI SPACE SpA. All right reserved.

UUT DATA :	Model	Item	C.I.	S/N

STEP n°	TEST SEQUENCE	EXPECTED VALUE	MEASURED VALUE	REMARKS
SC-01.16	using CAN BUS 31 monitor the OK/NOK flags of all the Boards: all the flags shall be in the OK status	OK		CAN BUS 31 Digital status check
SC-01.17	monitor with the oscilloscope the input current and voltage and the representative secondary output voltage of the following 28V outlets: ER1_N			Annex pictures in the end of document
SC-01.18	Monitor with oscilloscope the following 120V outlet: CCEB 120V			
SC-01.19	By remote, using CAN BUS 30 switch OFF ESEM 3-A-1 outlet 1	OK		CAN BUS 30 Digital command check
SC-01.20	By remote, using CAN BUS 31 switch ON ESEM 3-A-1 outlet 1	OK		CAN BUS 31 Digital command check
SC-01.21	Switch Off the "power switch "of "power switch box"	OK		
SC-01.22	Switch off power supply			
SC-01.23	**TEST RUN with capacitor coupling (50kHz÷50MHz)** Verify that UUT and Operational Bus are switched off	OK		
SC-01.24	Verify that TE is on (with Operational Bus off)	OK		
SC-01.25	Connect the UUT as shown in Figure 6-6	OK		
SC-01.26	Connect main and return power bus lines to power supply through the LISN	OK		
SC-01.27	Set power supply at 120Vdc	OK		
SC-01.28	Switch ON the **"power switch "of "power switch box"**	120Vdc ± 1Vdc		
SC-01.29	By remote command the unit in nominal configuration	OK		
SC-01.30	Take note of current absorption from main bus	16,00A<Iin<20,00A		
SC-01.31	Verify by remote that the status of all the boards of the section is	OK		
SC-01.32	Start with frequency injection sweep	OK		
SC-01.33	During the test verify the following UUT parameters:	OK		
SC-01.34	using CAN BUS 30 monitor the OK/NOK flags of all the Boards: all the flags shall be in the OK status	OK		CAN BUS 30 Digital status check
SC-01.35	using CAN BUS 31 monitor the OK/NOK flags of all the Boards: all the flags	OK		CAN BUS 31 Digital status check

DATE:	TEST CONDUCTOR	QA	CUSTOMER

Questo documento contiene informazioni di proprietà di CARLO GAVAZZI SPACE SpA. Tutti i diritti sono riservati.
All information contained in this document are property of CARLO GAVAZZI SPACE SpA. All right reserved.

UUT DATA :	Model	Item	C.I.	S/N

STEP n°	TEST SEQUENCE	EXPECTED VALUE	MEASURED VALUE	REMARKS
	shall be in the OK status			
SC-01.36	Monitor with the oscilloscope the input current and voltage and the representative secondary output voltage of the following 28V outlets: ER1_N			Annex pictures in the end of document
SC-01.37	Monitor with oscilloscope the following 120V outlet: CCEB 120V			
SC-01.38	By remote, using CAN BUS 30 switch OFF ESEM 3-A-1 outlet 1	OK		CAN BUS 30 Digital command check
SC-01.39	By remote, using CAN BUS 31 switch ON ESEM 3-A-1 outlet 1	OK		CAN BUS 31 Digital command check
SC-01.40	Switch Off the "power switch "of "power switch box"	OK		
SC-01.41	Switch off power supply	OK		

DATE:	TEST CONDUCTOR	QA	CUSTOMER

Questo documento contiene informazioni di proprietà di CARLO GAVAZZI SPACE SpA. Tutti i diritti sono riservati.
All information contained in this document are property of CARLO GAVAZZI SPACE SpA. All right reserved.

UUT DATA :	Model	Item	C.I.	S/N

STEP n°	TEST SEQUENCE	EXPECTED VALUE	MEASURED VALUE	REMARKS

10.5.2 SC-02: INPUT IMPEDANCE

SC-02.1	**OBJECTIVE** To measure the UUT input impedance on 120V Operational feeder. The test is performed at closed box			
SC-02.2	**TEST SET-UP** Test set-up is shown in Figure 6-5 for all the frequency range (50Hz ÷ 100kHz)			
SC-02.3	**TEST FEATURE** The test shall be performed with the same set-up and procedure as per paragraph 10.4.1 , but with the following differences: - the amplitude of the input signal is reduced to have a small signal result. - the frequency range is reduced to 50Hz ÷ 100kHz The test shall be performed on the following UUT Input Power Bus Lines: Operational BUS - J200 (BI_120V (positive)) - J200 (AI_120V_RTN (negative))			
SC-02.4	**IMPEDANCE LIMIT** The load impedance presented by AMS02-PDS unit shall be measured and shall not exceed the limits defined in figure 11-5 and 11-6.			
SC-02.5	**TEST RUN with transformer coupling (50Hz ÷100kHz)** Verify that UUT and main Bus are switched off	OK		
SC-02.6	Verify that TE is on (with main Bus off)	OK		
SC-02.7	Connect the UUT as shown in Figure 6-5	OK		
SC-02.8	Connect main and return power bus lines to power supply through the LISN	OK		
SC-02.9	Set power supply to 113Vdc	113V±1V		

DATE:	TEST CONDUCTOR	QA	CUSTOMER

Questo documento contiene informazioni di proprietà di CARLO GAVAZZI SPACE SpA. Tutti i diritti sono riservati.
All information contained in this document are property of CARLO GAVAZZI SPACE SpA. All right reserved.

UUT DATA :	Model	Item	C.I.	S/N

STEP n°	TEST SEQUENCE	EXPECTED VALUE	MEASURED VALUE	REMARKS
SC-02.10	Switch ON the "power switch "of "power switch box"	OK		
SC-02.11	By remote set the unit in nominal configuration	OK		Use CAN BUS 30
SC-02.12	Take note of input current from main bus	16,00A<Iin<20,00A		
SC-02.13	Start with frequency injection sweep	OK		
SC-02.14	During the test measure the following UUT parameters: - Input voltage (AC coupling) - Input current (AC coupling)	OK		
SC-02.15	Plot input impedance (Voltage/Current) both in magnitude and phase and verify that is in compliance with limits.	OK		Annex picture in the end of document
SC-02.16	Set power supply to 120Vdc	120V±1V		Unit still ON in nominal configuration
SC-02.17	Take note of input current from main bus	16,00A<Iin<20,00A		
SC-02.18	Start with frequency injection sweep	OK		
SC-02.19	During the test measure the following UUT parameters: - Input voltage (AC coupling) - Input current (AC coupling)	OK		
SC-02.20	Plot input impedance (Voltage/Current) both in magnitude and phase and verify that is in compliance with limits.	OK		Annex picture in the end of document
SC-02.21	Set power supply to 120Vdc	126V±1V		Unit still ON in nominal configuration
SC-02.22	Take note of input current from main bus	16,00A<Iin<20,00A		
SC-02.23	Start with frequency injection sweep	OK		
SC-02.24	During the test measure the following UUT parameters: - Input voltage (AC coupling) - Input current (AC coupling)	OK		
SC-02.25	Plot input impedance (Voltage/Current) both in magnitude and phase and verify that is in compliance with limits.	OK		Annex picture in the end of document
SC-02.26	Switch Off the "power switch "of "power switch box"	OK		
SC-02.27	Switch off main bus	OK		

DATE:	TEST CONDUCTOR	QA	CUSTOMER

Questo documento contiene informazioni di proprietà di CARLO GAVAZZI SPACE SpA. Tutti i diritti sono riservati.
All information contained in this document are property of CARLO GAVAZZI SPACE SpA. All right reserved.

UUT DATA :	Model	Item	C.I.	S/N

STEP n°	TEST SEQUENCE	EXPECTED VALUE	MEASURED VALUE	REMARKS

10.5.3 SC-03: VOLTAGE SPIKE TRANSIENTS INJECTION ON DC POWER LINES

SC-03.1	**OBJECTIVE** To verify the UUT immunity from differential mode voltage spike transients injected on input power bus lines. The test is performed at closed box			
SC-03.2	**TEST SET-UP** Test set-up is shown in Figure 6-7: - the current probe shall be positioned as close as possible to UUT input power bus connector (J200) - the voltage probe shall be connected directly on UUT input power bus connector (J200)			

DATE:	TEST CONDUCTOR	QA	CUSTOMER

Questo documento contiene informazioni di proprietà di CARLO GAVAZZI SPACE SpA. Tutti i diritti sono riservati.
All information contained in this document are property of CARLO GAVAZZI SPACE SpA. All right reserved.

UUT DATA :	Model	Item	C.I.	S/N

STEP n°	TEST SEQUENCE	EXPECTED VALUE	MEASURED VALUE	REMARKS
SC-03.3	**TEST FEATURE** Signal Characteristics: - transient shape: see Figure 10-7 - voltage amplitude: ± 120V over power bus voltage (120V) Note: The voltage amplitude generated by the transient generator shall be calibrated on a 5Ω resistance. Then the voltage transient shape shall be applied to the UUT with the same transient generator settings, regardless the actual voltage amplitude applied to the UUT if it is less than 120V. If the actual voltage amplitude applied to the UUT rises over 120V, it shall be limited to 120V by changing the transient generator settings. - duration: 10us and 0.15us - max pulse repetition rate: 10Hz - the spike will be applied for a period not less than 2 minutes in duration - injection method: parallel The test shall be performed on the following UUT Input Power Bus Lines: Operational BUS - J200 (BI_120V (positive)) - J200 (AI_120V_RTN (negative))			
SC-03.4	**SUSCEPTIBILITY CRITERIA** The equipment shall not exhibit any malfunction, degradation of performance or deviation from specified parameters beyond tolerances given by the corresponding specification			
SC-03.5	**TEST RUN: 120V + 120V for 0.15us** Verify that UUT and Operational Bus are switched off	OK		
SC-03.6	Calibrate the spike generator on 5Ω resistance	OK		Annex plot in the end of the document
SC-03.7	Verify that TE is on (with Operational Bus off)	OK		
SC-03.8	Connect the UUT as shown in Figure 6-7	OK		
SC-03.9	Connect main and return power bus lines to power supply through the LISN	OK		

DATE:	TEST CONDUCTOR	QA	CUSTOMER

Questo documento contiene informazioni di proprietà di CARLO GAVAZZI SPACE SpA. Tutti i diritti sono riservati.
All information contained in this document are property of CARLO GAVAZZI SPACE SpA. All right reserved.

UUT DATA :	Model	Item	C.I.	S/N

STEP n°	TEST SEQUENCE	EXPECTED VALUE	MEASURED VALUE	REMARKS
SC-03.10	Set power supply at 120Vdc	OK		
SC-03.11	Switch ON the "power switch "of "power switch box"	120Vdc ± 1Vdc		
SC-03.12	By remote set the unit in nominal configuration	OK		USE CAN BUS 30
SC-03.13	Take note of input current	16,00A<Iin<20,00A		
SC-03.14	Apply the voltage transient shape	OK		
SC-03.15	During the test verify the following UUT parameters:	OK		
SC-03.16	With CAN BUS 30 Monitor the OK/NOK flags of all the Power Boards. All the flags shall be in the OK status	OK		
SC-03.17	With CAN BUS 31 Monitor the OK/NOK flags of all the Power Boards. All the flags shall be in the OK status	OK		
SC-03.18	Monitor with the oscilloscope the following signals: Input bus TPD3 CCEB (120V outlet)	OK		Annex picture in the end of document
SC-03.19	Using CAN BUS 30 switch ON by remote, in ESEM 3-A-1 window, the outlet 6	OK		CAN BUS 30 digital command check during spike transients
SC-03.20	Verify that command is correctly executed	OK		
SC-03.21	Using CAN BUS 31 switch OFF by remote, in ESEM 3-A-1 window, the outlet 6	OK		CAN BUS 31 digital command check during spike transients
SC-03.22	Verify that command is correctly executed	OK		
SC-03.23	Stop voltage spikes injection	OK		Voltage spike injection duration at least two minutes
SC-03.24	Switch OFF the "power switch "of "power switch box"	OK		
SC-03.25	Switch OFF main bus	OK		
SC-03.26	**TEST RUN: 120V + 120V for 10us** Verify that UUT and Operational Bus are switched off	OK		
SC-03.27		OK		

DATE:	TEST CONDUCTOR	QA	CUSTOMER

Questo documento contiene informazioni di proprietà di CARLO GAVAZZI SPACE SpA. Tutti i diritti sono riservati.
All information contained in this document are property of CARLO GAVAZZI SPACE SpA. All right reserved.

UUT DATA :	Model	Item	C.I.	S/N

STEP n°	TEST SEQUENCE	EXPECTED VALUE	MEASURED VALUE	REMARKS
SC-03.28	Calibrate the spike generator on 5Ω resistance	OK		Annex plot in the end of the document
SC-03.29	Verify that TE is on (with Operational Bus off)	OK		
SC-03.30	Connect the UUT as shown in Figure 6-7	OK		
SC-03.31	Connect main and return power bus lines to power supply through the LISN	OK		
SC-03.32	Set power supply at 120Vdc	OK		
SC-03.33	Switch ON the "power switch "of "power switch box"	120Vdc ± 1Vdc		
SC-03.34	By remote set the unit in nominal configuration	OK		USE CAN BUS 30
SC-03.35	Take note of input current	16,00A<Iin<20,00A		
SC-03.36	Apply the voltage transient shape	OK		
SC-03.37	During the test verify the following UUT parameters:	OK		
SC-03.38	With CAN BUS 30 Monitor the OK/NOK flags of all the Power Boards. All the flags shall be in the OK status	OK		
SC-03.39	With CAN BUS 31 Monitor the OK/NOK flags of all the Power Boards. All the flags shall be in the OK status	OK		
SC-03.40	Monitor with the oscilloscope the following signals: Input bus TPD3 CCEB (120V outlet)	OK		Annex picture in the end of document
SC-03.41	Using CAN BUS 30 switch ON by remote, in ESEM 3-A-1 window, the outlet 6	OK		CAN BUS 30 digital command check during spike transients
SC-03.42	Verify that command is correctly executed	OK		
SC-03.43	Using CAN BUS 31 switch OFF by remote, in ESEM 3-A-1 window, the outlet 6	OK		CAN BUS 31 digital command check during spike transients
SC-03.44	Verify that command is correctly executed	OK		
SC-03.45	Stop voltage spikes injection	OK		Voltage spike injection duration at least two minutes
SC-03.46	Switch OFF the "power switch "of "power switch box"	OK		

DATE:	TEST CONDUCTOR	QA	CUSTOMER

Questo documento contiene informazioni di proprietà di CARLO GAVAZZI SPACE SpA. Tutti i diritti sono riservati.
All information contained in this document are property of CARLO GAVAZZI SPACE SpA. All right reserved.

UUT DATA :	Model	Item	C.I.	S/N

STEP n°	TEST SEQUENCE	EXPECTED VALUE	MEASURED VALUE	REMARKS
SC-03.47	Switch OFF main bus	OK		
SC-03.48	**TEST RUN: 120V - 120V for 0.15us** Verify that UUT and Operational Bus are switched off	OK		
SC-03.49	Calibrate the spike generator on 5Ω resistance	OK		Annex plot in the end of the document
SC-03.50	Verify that TE is on (with Operational Bus off)	OK		
SC-03.51	Connect the UUT as shown in Figure 6-7	OK		
SC-03.52	Connect main and return power bus lines to power supply through the LISN	OK		
SC-03.53	Set power supply at 120Vdc	OK		
SC-03.54	Switch ON the "power switch "of "power switch box"	120Vdc ± 1Vdc		
SC-03.55	By remote set the unit in nominal configuration	OK		USE CAN BUS 30
SC-03.56	Take note of input current	16,00A<Iin<20,00A		
SC-03.57	Apply the voltage transient shape	OK		
SC-03.58	During the test verify the following UUT parameters:	OK		
SC-03.59	With CAN BUS 30 Monitor the OK/NOK flags of all the Power Boards. All the flags shall be in the OK status	OK		
SC-03.60	With CAN BUS 31 Monitor the OK/NOK flags of all the Power Boards. All the flags shall be in the OK status	OK		
SC-03.61	Monitor with the oscilloscope the following signals: Input bus TPD3 CCEB (120V outlet)	OK		Annex picture in the end of document
SC-03.62	Using CAN BUS 30 switch ON by remote, in ESEM 3-A-1 window, the outlet 6	OK		CAN BUS 30 digital command check during spike transients
SC-03.63	Verify that command is correctly executed	OK		
SC-03.64	Using CAN BUS 31 switch OFF by remote, in ESEM 3-A-1 window, the outlet 6	OK		CAN BUS 31 digital command check during spike transients
SC-03.65	Verify that command is correctly executed	OK		

DATE:	TEST CONDUCTOR	QA	CUSTOMER

Questo documento contiene informazioni di proprietà di CARLO GAVAZZI SPACE SpA. Tutti i diritti sono riservati.
All information contained in this document are property of CARLO GAVAZZI SPACE SpA. All right reserved.

UUT DATA :	Model	Item	C.I.	S/N

STEP n°	TEST SEQUENCE	EXPECTED VALUE	MEASURED VALUE	REMARKS
SC-03.66	Stop voltage spikes injection	OK		Voltage spike injection duration at least two minutes
SC-03.67	Switch OFF the "power switch "of "power switch box"	OK		
SC-03.68	Switch OFF main bus	OK		
SC-03.69	**TEST RUN: 120V - 120V for 10us** Verify that UUT and Operational Bus are switched off	OK		
SC-03.70	Calibrate the spike generator on 5Ω resistance	OK		Annex plot in the end of the document
SC-03.71	Verify that TE is on (with Operational Bus off)	OK		
SC-03.72	Connect the UUT as shown in Figure 6-7	OK		
SC-03.73	Connect main and return power bus lines to power supply through the LISN	OK		
SC-03.74	Set power supply at 120Vdc	OK		
SC-03.75	Switch ON the "power switch "of "power switch box"	120Vdc ± 1Vdc		
SC-03.76	By remote set the unit in nominal configuration	OK		USE CAN BUS 30
SC-03.77	Take note of input current	16,00A<Iin<20,00A		
SC-03.78	Apply the voltage transient shape	OK		
SC-03.79	During the test verify the following UUT parameters:	OK		
SC-03.80	With CAN BUS 30 Monitor the OK/NOK flags of all the Power Boards. All the flags shall be in the OK status	OK		
SC-03.81	With CAN BUS 31 Monitor the OK/NOK flags of all the Power Boards. All the flags shall be in the OK status	OK		
SC-03.82	Monitor with the oscilloscope the following signals: Input bus TPD3 CCEB (120V outlet)	OK		Annex picture in the end of document
SC-03.83	Using CAN BUS 30 switch ON by remote, in ESEM 3-A-1 window, the outlet 6	OK		CAN BUS 30 digital command check during spike transients
SC-03.84	Verify that command is correctly executed	OK		

DATE:	TEST CONDUCTOR	QA	CUSTOMER

Questo documento contiene informazioni di proprietà di CARLO GAVAZZI SPACE SpA. Tutti i diritti sono riservati.
All information contained in this document are property of CARLO GAVAZZI SPACE SpA. All right reserved.

UUT DATA :	Model	Item	C.I.	S/N

STEP n°	TEST SEQUENCE	EXPECTED VALUE	MEASURED VALUE	REMARKS
SC-03.85	Using CAN BUS 31 switch OFF by remote, in ESEM 3-A-1 window, the outlet 6	OK		CAN BUS 31 digital command check during spike transients
SC-03.86	Verify that command is correctly executed	OK		
SC-03.87	Stop voltage spikes injection	OK		Voltage spike injection duration at least two minutes
SC-03.88	Switch OFF the "power switch "of "power switch box"	OK		
SC-03.89	Switch OFF main bus	OK		
SC-03.90	Switch OFF main bus	OK		

DATE:	TEST CONDUCTOR	QA	CUSTOMER

Questo documento contiene informazioni di proprietà di CARLO GAVAZZI SPACE SpA. Tutti i diritti sono riservati.
All information contained in this document are property of CARLO GAVAZZI SPACE SpA. All right reserved.

UUT DATA :	Model	Item	C.I.	S/N

STEP n°	TEST SEQUENCE	EXPECTED VALUE	MEASURED VALUE	REMARKS

10.5.4 SC-04: NORMAL VOLTAGE TRANSIENT INJECTION ON DC POWER LINES

SC-04.39	**OBJECTIVE** To verify the UUT immunity from normal input bus transients The test is performed at closed box			
SC-04.40	**TEST SET-UP** Test set-up is shown in Figure 6-8 - the current probe shall be positioned as close as possible to UUT input power bus connector (J200) - the voltage probe shall be connected directly on UUT input power bus connector (J200)			
SC-04.41	**TEST FEATURE** *Signal Characteristics:* - transient shape: see Figure 10-8 - voltage amplitude: see Figure 10-8 - injection method: series The test shall be performed on the following UUT Input Power Bus Lines: Operational BUS - J200 (BI_120V (positive)) - J200 (AI_120V_RTN (negative))			
SC-04.42	**SUSCEPTIBILITY CRITERIA** The equipment shall not exhibit any malfunction, degradation of performance or deviation from specified parameters beyond tolerances given by the corresponding specification			
SC-04.43	**TEST RUN (Positive Shape)** Verify that UUT and Operational Bus are switched off	OK		
SC-04.44	Verify that TE is on (with Operational Bus off)	OK		
SC-04.45	Connect the UUT as shown in Figure 6-8	OK		

DATE:	TEST CONDUCTOR	QA	CUSTOMER

Questo documento contiene informazioni di proprietà di CARLO GAVAZZI SPACE SpA. Tutti i diritti sono riservati.
All information contained in this document are property of CARLO GAVAZZI SPACE SpA. All right reserved.

UUT DATA :	Model	Item	C.I.	S/N

STEP n°	TEST SEQUENCE	EXPECTED VALUE	MEASURED VALUE	REMARKS
SC-04.46	Connect main and return power bus lines to power supply through the LISN	OK		
SC-04.47	Set power supply at 126Vdc	126Vdc ± 1Vdc		
SC-04.48	Switch ON the "power switch "of "power switch box"	OK		
SC-04.49	By remote set the unit in nominal configuration	OK		
SC-04.50	Take note of input current	16,00A<Iin<20,00A		
SC-04.51	Apply the positive voltage shape to the UUT	OK		
SC-04.52	During voltage shape applying, acquire with the oscilloscope the following signals: Input bus TPD3 CCEB (120V outlet)	OK		Annex picture in the end of document
SC-04.53	With CAN BUS 30 Monitor the OK/NOK flags of all the Power Boards. All the flags shall be in the OK status	OK		
SC-04.54	With CAN BUS 31 Monitor the OK/NOK flags of all the Power Boards. All the flags shall be in the OK status	OK		
SC-04.55	Using CAN BUS 30 switch ON by remote, in ESEM 3-A-1 window, the outlet 6	OK		CAN BUS 30 digital command check
SC-04.56	Verify that command is correctly executed	OK		
SC-04.57	Using CAN BUS 31 switch OFF by remote, in ESEM 3-A-1 window, the outlet 6	OK		CAN BUS 31 digital command check
SC-04.58	Verify that command is correctly executed	OK		
SC-04.59	Switch OFF the "power switch "of "power switch box"	OK		
SC-04.60	Switch OFF main bus	OK		
SC-04.61	Prepare the instrumentation for negative voltage shape	OK		
SC-04.62	Switch ON main bus	OK		
SC-04.63	Set main bus to 112.5V	112.5V ± 1V		
SC-04.64	Switch ON the "power switch "of "power switch box"	OK		
SC-04.65	By remote set the unit in nominal configuration	OK		
SC-04.66	Take note of input current	16,00A<Iin<20,00A		

DATE:	TEST CONDUCTOR	QA	CUSTOMER

Questo documento contiene informazioni di proprietà di CARLO GAVAZZI SPACE SpA. Tutti i diritti sono riservati.
All information contained in this document are property of CARLO GAVAZZI SPACE SpA. All right reserved.

UUT DATA :	Model	Item	C.I.	S/N

STEP n°	TEST SEQUENCE	EXPECTED VALUE	MEASURED VALUE	REMARKS
SC-04.67	Apply the negative voltage shape to the UUT	OK		
SC-04.68	During voltage shape applying, acquire with the oscilloscope the following signals: Input bus TPD3 CCEB (120V outlet)	OK		Annex picture in the end of document
SC-04.69	With CAN BUS 30 Monitor the OK/NOK flags of all the Power Boards. All the flags shall be in the OK status	OK		
SC-04.70	With CAN BUS 31 Monitor the OK/NOK flags of all the Power Boards. All the flags shall be in the OK status	OK		
SC-04.71	Using CAN BUS 30 switch ON by remote, in ESEM 3-A-1 window, the outlet 6	OK		CAN BUS 30 digital command check
SC-04.72	Verify that command is correctly executed	OK		
SC-04.73	Using CAN BUS 31 switch OFF by remote, in ESEM 3-A-1 window, the outlet 6	OK		CAN BUS 31 digital command check
SC-04.74	Verify that command is correctly executed	OK		
SC-04.75	Switch OFF the "power switch "of "power switch box"	OK		
SC-04.76	Switch OFF main bus	OK		

DATE:	TEST CONDUCTOR	QA	CUSTOMER

Questo documento contiene informazioni di proprietà di CARLO GAVAZZI SPACE SpA. Tutti i diritti sono riservati.
All information contained in this document are property of CARLO GAVAZZI SPACE SpA. All right reserved.

UUT DATA :	Model	Item	C.I.	S/N

STEP n°	TEST SEQUENCE	EXPECTED VALUE	MEASURED VALUE	REMARKS

10.5.5 SC-05: ABNORMAL VOLTAGE TRANSIENT

SC-05.27	OBJECTIVE To verify the UUT immunity from input bus abnormal voltage transient The test is performed at closed box			
SC-05.28	**TEST SET-UP** Test set up is shown in Figure 6-8 - the current probe shall be positioned as close as possible to UUT input power bus connector - the voltage probe shall be connected directly on UUT input power bus connector			
SC-05.29	**TEST FEATURE** *Signal Characteristics:* - transient shape: see Figure 10-8 - voltage amplitude: see Figure 10-8 - injection method: series ***Note:*** *since the transient generator available at the test facility is not able to generate the complete transient shape shown in figure 10-10, the test shall be performed splitting the transient in different parts, which will be annexed in the end of the document. The final envelope given by the different parts shall ensure to cover the limit mask.* The test shall be performed on the following UUT Input Power Bus Lines: Operational BUS - J200 connector, positive power bus line AI_120V - J200 connector, negative power bus line AI_120V_RTN			

DATE:	TEST CONDUCTOR	QA	CUSTOMER

Questo documento contiene informazioni di proprietà di CARLO GAVAZZI SPACE SpA. Tutti i diritti sono riservati.
All information contained in this document are property of CARLO GAVAZZI SPACE SpA. All right reserved.

UUT DATA :	Model	Item	C.I.	S/N

STEP n°	TEST SEQUENCE	EXPECTED VALUE	MEASURED VALUE	REMARKS
SC-05.30	**SUSCEPTIBILITY CRITERIA** No permanent degradation and no failure propagation across the UUT interfaces shall result. The downward shape causes the UUT switching-off because of the input under voltage protection intervention: in this case at the following switching-on the UUT must not show any performance degradation. The same will happen for the positive peak, when voltage protection set to 150V ± 2V switches off the unit . After switch ON the UUT must not show any performance degradation.			
SC-05.31	**TEST RUN (Downward Shape – first part of the transient shape)** Verify that UUT and Operational Bus are switched off	OK		
SC-05.32	Verify that TE is on (with Operational Bus off)	OK		
SC-05.33	Connect the UUT as shown in Figure 6-8	OK		
SC-05.34	Connect main and return power bus lines to power supply through the LISN	OK		
SC-05.35	By remote set the unit in nominal configuration	OK		
SC-05.36	Take note of input current	16,00A<Iin<20,00A		Main bus set to 126V
SC-05.37	Apply the positive voltage spikes described in Figure 10-9	OK		Every spike must be applied with unit ON. Every spike generated on input bus will be monitored and annexed In the end of the document.
SC-05.38	From remote, with CAN BUS 30 monitor the OK/NOK flags of all the Power Boards. All the flags shall be in the OK status	OK		CAN BUS 30 check
SC-05.39	From remote, with CAN BUS 31 monitor the OK/NOK flags of all the Power Boards. All the flags shall be in the OK status	OK		CAN BUS 31 check
SC-05.40	Using CAN BUS 31 switch ON by remote, in ESEM 3-A-1 window, the outlet 6	OK		CAN BUS 31 digital command check
SC-05.41	Verify that command is correctly executed	OK		
SC-05.42	Using CAN BUS 31 switch OFF by remote, in ESEM 3-A-1 window, the outlet 6	OK		CAN BUS 31 digital command check

DATE:	TEST CONDUCTOR	QA	CUSTOMER

Questo documento contiene informazioni di proprietà di CARLO GAVAZZI SPACE SpA. Tutti i diritti sono riservati.
All information contained in this document are property of CARLO GAVAZZI SPACE SpA. All right reserved.

UUT DATA :	Model	Item	C.I.	S/N

STEP n°	TEST SEQUENCE	EXPECTED VALUE	MEASURED VALUE	REMARKS
SC-05.43	Verify that command is correctly executed	OK		
SC-05.44	Set the main bus to 113V and take note of input current			
SC-05.45	Apply the negative voltage spikes described in Figure 10-9	OK		Every spike must be applied with unit ON. Every spike generated on input bus will be monitored and annexed In the end of the document.
SC-05.46	From remote, with CAN BUS 30 monitor the OK/NOK flags of all the Power Boards. All the flags shall be in the OK status	OK		CAN BUS 30 check
SC-05.47	From remote, with CAN BUS 31 monitor the OK/NOK flags of all the Power Boards. All the flags shall be in the OK status	OK		CAN BUS 31 check
SC-05.48	Using CAN BUS 31 switch ON by remote, in ESEM 3-A-1 window, the outlet 6	OK		CAN BUS 31 digital command check
SC-05.49	Verify that command is correctly executed	OK		
SC-05.50	Using CAN BUS 31 switch OFF by remote, in ESEM 3-A-1 window, the outlet 6	OK		CAN BUS 31 digital command check
SC-05.51	Switch Off the "power switch "of "power switch box"	OK		
SC-05.52	Switch off main bus	OK		

DATE:	TEST CONDUCTOR	QA	CUSTOMER

Questo documento contiene informazioni di proprietà di CARLO GAVAZZI SPACE SpA. Tutti i diritti sono riservati.
All information contained in this document are property of CARLO GAVAZZI SPACE SpA. All right reserved.

UUT DATA :	Model	Item	C.I.	S/N

STEP n°	TEST SEQUENCE	EXPECTED VALUE	MEASURED VALUE	REMARKS

10.5.6 LARGE SIGNAL STABILITY

LSS-0.26	**OBJECTIVE** To verify the UUT capability of maintaining stability with the APM interface by damping a transient response to 10% of the maximum response amplitude within 1 ms, and remaining below 10% thereafter under the following conditions: - The rise time / fall time (between 10% and 90% of the amplitude) of the input voltage pulse is less than 10 us - The voltage pulse is varied from 100 us to 150 us in duration The test shall be performed at closed box			
LSS-0.27	**TEST SET-UP** Test set-up is shown in Figure 6-8; the voltage probe shall be connected directly on UUT input power bus connector			
LSS-0.28	**TEST FEATURE** *Signal Characteristics:* - Transient shape: see Figure 10-10 - Voltage amplitude: see Figure 10-10 - injection method: series The test shall be performed on the following UUT Input Power Bus Lines: Operational BUS - J200 (BI_120V (positive)) - J200 (AI_120V_RTN (negative))			

DATE:	TEST CONDUCTOR	QA	CUSTOMER

Questo documento contiene informazioni di proprietà di CARLO GAVAZZI SPACE SpA. Tutti i diritti sono riservati.
All information contained in this document are property of CARLO GAVAZZI SPACE SpA. All right reserved.

UUT DATA :	Model	Item	C.I.	S/N

STEP n°	TEST SEQUENCE	EXPECTED VALUE	MEASURED VALUE	REMARKS
LSS-0.29	**SUSCEPTIBILITY CRITERIA** The integrated external payload shall maintain stability with the APM interface by damping a transient response to 10% of the maximum response amplitude within 1 ms, and remaining below 10% thereafter under the following conditions: - The rise time / fall time (between 10% and 90% of the amplitude) of the input voltage pulse is less than 10 us - The voltage pulse is to be varied from 100 us to 150 us in duration The above requirements are clarified by Figure 10-10 No permanent degradation and no failure propagation across the UUT interfaces shall result			
LSS-0.30	**TEST RUN** Verify that UUT and Operational Bus are switched off	OK		
LSS-0.31	Verify that TE is on (with Operational Bus off)	OK		
LSS-0.32	Connect the UUT as shown in Figure 6-8	OK		
LSS-0.33	Connect the oscilloscope to 28V outlets: TPD3			
LSS-0.34	Connect main and return power bus lines to power supply through the LISN	OK		
LSS-0.35	Set power supply at 120Vdc	OK		
LSS-0.36	Switch ON the "power switch "of "power switch box"	OK		
LSS-0.37	Set the unit in nominal configuration	OK		
LSS-0.38	Take note of input current	16,00A<Iin<20,00A		
LSS-0.39	Apply the voltage pulse with 100uS duration	OK		
LSS-0.40	Verify with oscilloscope that the transient response diminish to 10% of the maximum amplitude within 1mS and remains below 10% thereafter (see Figure 10-10)	OK		Annex picture in the end of the document
LSS-0.41	Acquire with oscilloscope the signals: TPD3 ESEM 3-B out 1 (120v outlet)	OK		Annex picture in the end of the document

DATE:	TEST CONDUCTOR	QA	CUSTOMER

Questo documento contiene informazioni di proprietà di CARLO GAVAZZI SPACE SpA. Tutti i diritti sono riservati.
All information contained in this document are property of CARLO GAVAZZI SPACE SpA. All right reserved.

UUT DATA :	Model	Item	C.I.	S/N

STEP n°	TEST SEQUENCE	EXPECTED VALUE	MEASURED VALUE	REMARKS
LSS-0.42	From remote, with CAN BUS 30 monitor the OK/NOK flags of all the Power Boards. All the flags shall be in the OK status	OK		CAN BUS 30 check
LSS-0.43	From remote, with CAN BUS 31 monitor the OK/NOK flags of all the Power Boards. All the flags shall be in the OK status	OK		CAN BUS 31 check
LSS-0.44	Apply the voltage pulse with 150uS duration	OK		
LSS-0.45	Verify with oscilloscope that the transient response diminish to 10% of the maximum amplitude within 1mS and remains below 10% thereafter (see Figure 10-10)	OK		Annex picture in the end of the document
LSS-0.46	Acquire with oscilloscope the signals: TPD3 ESEM 3-B out 1 (120v outlet)	OK		Annex picture in the end of the document
LSS-0.47	From remote, with CAN BUS 30 monitor the OK/NOK flags of all the Power Boards. All the flags shall be in the OK status	OK		CAN BUS 30 check
LSS-0.48	From remote, with CAN BUS 31 monitor the OK/NOK flags of all the Power Boards. All the flags shall be in the OK status	OK		CAN BUS 31 check
LSS-0.49	Switch Off the "power switch "of "power switch box"	OK		
LSS-0.50	Switch Off main bus	OK		

DATE:	TEST CONDUCTOR	QA	CUSTOMER

Questo documento contiene informazioni di proprietà di CARLO GAVAZZI SPACE SpA. Tutti i diritti sono riservati.
All information contained in this document are property of CARLO GAVAZZI SPACE SpA. All right reserved.

UUT DATA :	Model	Item	C.I.	S/N

STEP n°	TEST SEQUENCE	EXPECTED VALUE	MEASURED VALUE	REMARKS

10.6 REVERSE CURRENT

RC-1.	**OBJECTIVE** The unit shall limit reverse current transients that can occur when a hard fault occurs across the power source within the transient envelope defined for 25 Amps curves shown in pictures in the end of this section (Fig. 10.5)			
RC-2.	**TEST SET-UP** Connect the unit as described in picture Figure 6-13			
RC-3.	**TEST FEATURE** 1) Test shall be performed with UUT in nominal configuration 2) Section A and section B will be tested			
RC-4.	Operational BUS - J100 (AI_120V (positive)) - J100 (AI_120V_RTN (negative))			Section A verification
RC-5.	Set power supply at 120Vdc	120Vdc ± 1Vdc		
RC-6.	Switch ON the "power switch "of "power switch box"	OK		
RC-7.	By remote set the unit in nominal configuration	OK		
RC-8.	Take note of input current	16,00A<Iin<20,00A		
RC-9.	Using EMC box test close U1 switch and simultaneously open U2 switch	OK		
RC-10.	Take note of input reverse current	OK		Annex picture in the end of the document
RC-11.	Verify that reverse current is under the limits described in the three pictures in the end of this section (use 25A limits)	OK		
RC-12.	Switch off power switch box and power supply	OK		

DATE:	TEST CONDUCTOR	QA	CUSTOMER

Questo documento contiene informazioni di proprietà di CARLO GAVAZZI SPACE SpA. Tutti i diritti sono riservati.
All information contained in this document are property of CARLO GAVAZZI SPACE SpA. All right reserved.

UUT DATA :	Model	Item	C.I.	S/N

STEP n°	TEST SEQUENCE	EXPECTED VALUE	MEASURED VALUE	REMARKS
RC-13.	Operational BUS - J200 (BI_120V (positive)) - J200 (BI_120V_RTN (negative))			Section B verification
RC-14.	Set power supply at 120Vdc	120Vdc ± 1Vdc		
RC-15.	Switch ON the "power switch "of "power switch box"	OK		
RC-16.	By remote set the unit in nominal configuration	OK		
RC-17.	Take note of input current	16,00A<Iin<20,00A		
RC-18.	Using EMC box test close U1 switch and simultaneously open U2 switch	OK		
RC-19.	Take note of input reverse current	OK		Annex picture in the end of the document
RC-20.	Verify that reverse current is under the limits described in the three pictures in the end of this section (use 25A limits)	OK		
RC-21.	Switch off power switch box and power supply	OK		

DATE:	TEST CONDUCTOR	QA	CUSTOMER

Questo documento contiene informazioni di proprietà di CARLO GAVAZZI SPACE SpA. Tutti i diritti sono riservati.
All information contained in this document are property of CARLO GAVAZZI SPACE SpA. All right reserved.

UUT DATA :	Model	Item	C.I.	S/N

STEP n°	TEST SEQUENCE	EXPECTED VALUE	MEASURED VALUE	REMARKS

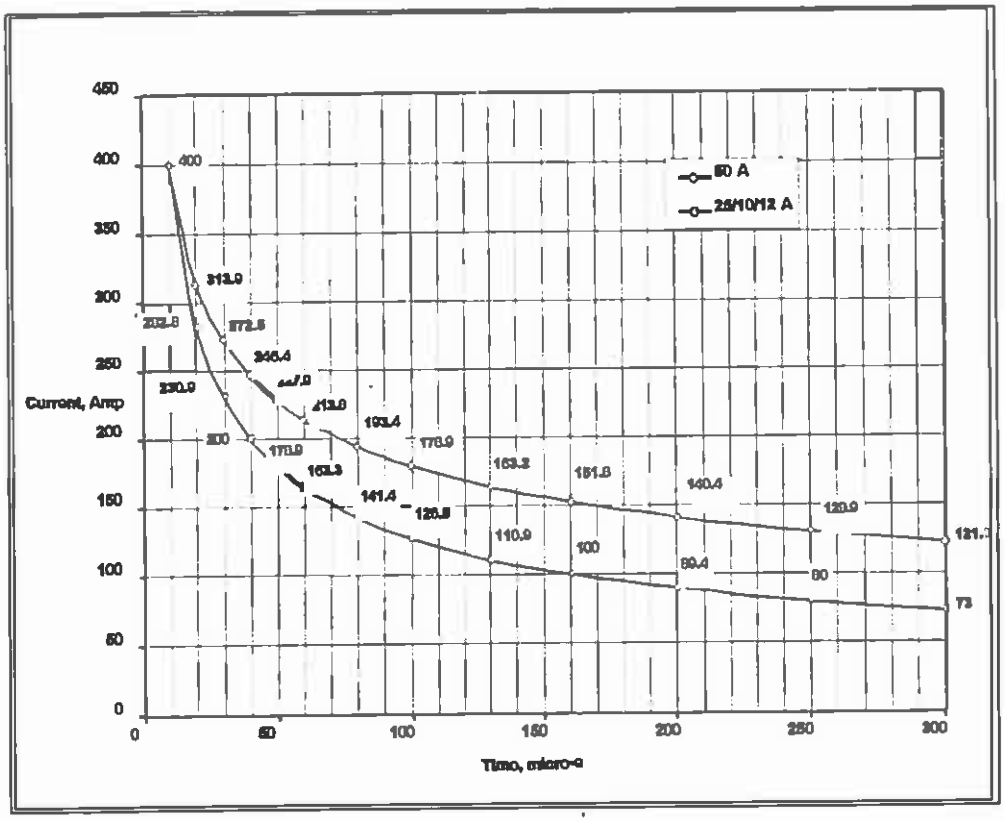

Figure 10-12: current limits 10uS-300uS

DATE:	TEST CONDUCTOR	QA	CUSTOMER

Questo documento contiene informazioni di proprietà di CARLO GAVAZZI SPACE SpA. Tutti i diritti sono riservati.
All information contained in this document are property of CARLO GAVAZZI SPACE SpA. All right reserved.

UUT DATA :	Model	Item	C.I.	S/N

STEP n°	TEST SEQUENCE	EXPECTED VALUE	MEASURED VALUE	REMARKS

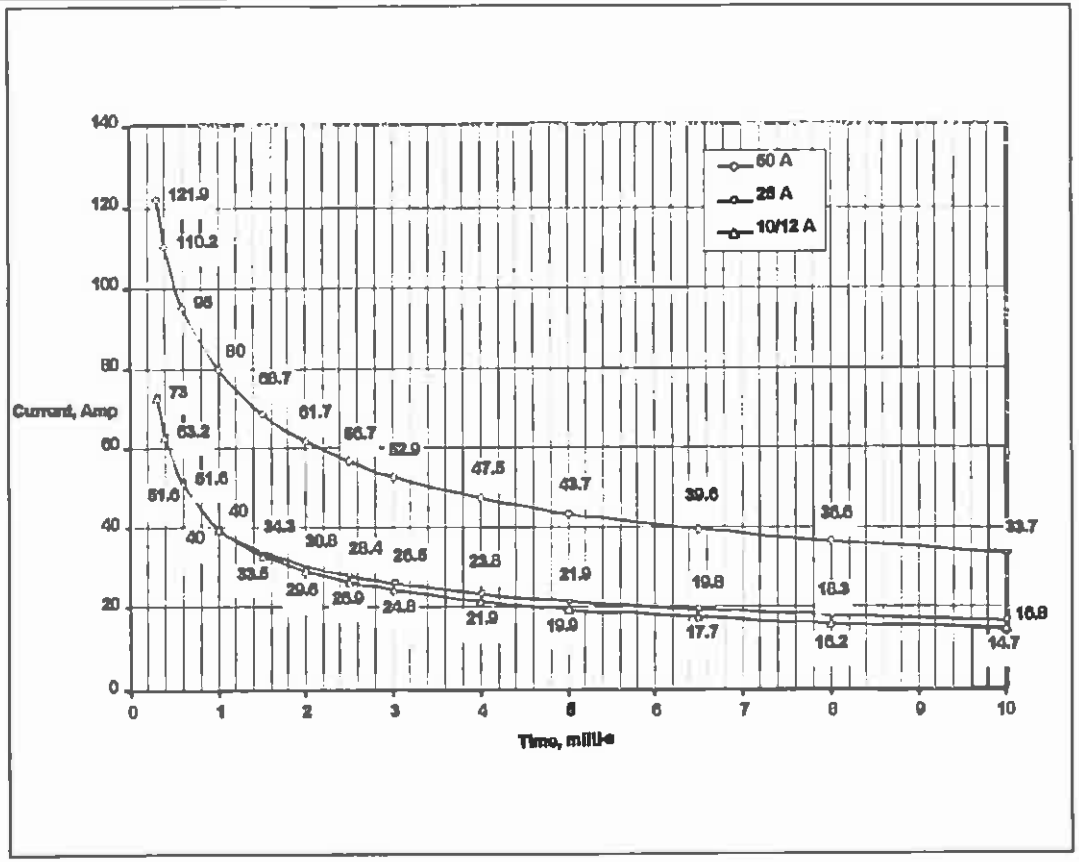

Figure 10-13: Reverse current limits 300uS-10mS

DATE:	TEST CONDUCTOR	QA	CUSTOMER

Questo documento contiene informazioni di proprietà di CARLO GAVAZZI SPACE SpA. Tutti i diritti sono riservati.
All information contained in this document are property of CARLO GAVAZZI SPACE SpA. All right reserved.

UUT DATA :	Model	Item	C.I.	S/N

STEP n°	TEST SEQUENCE	EXPECTED VALUE	MEASURED VALUE	REMARKS

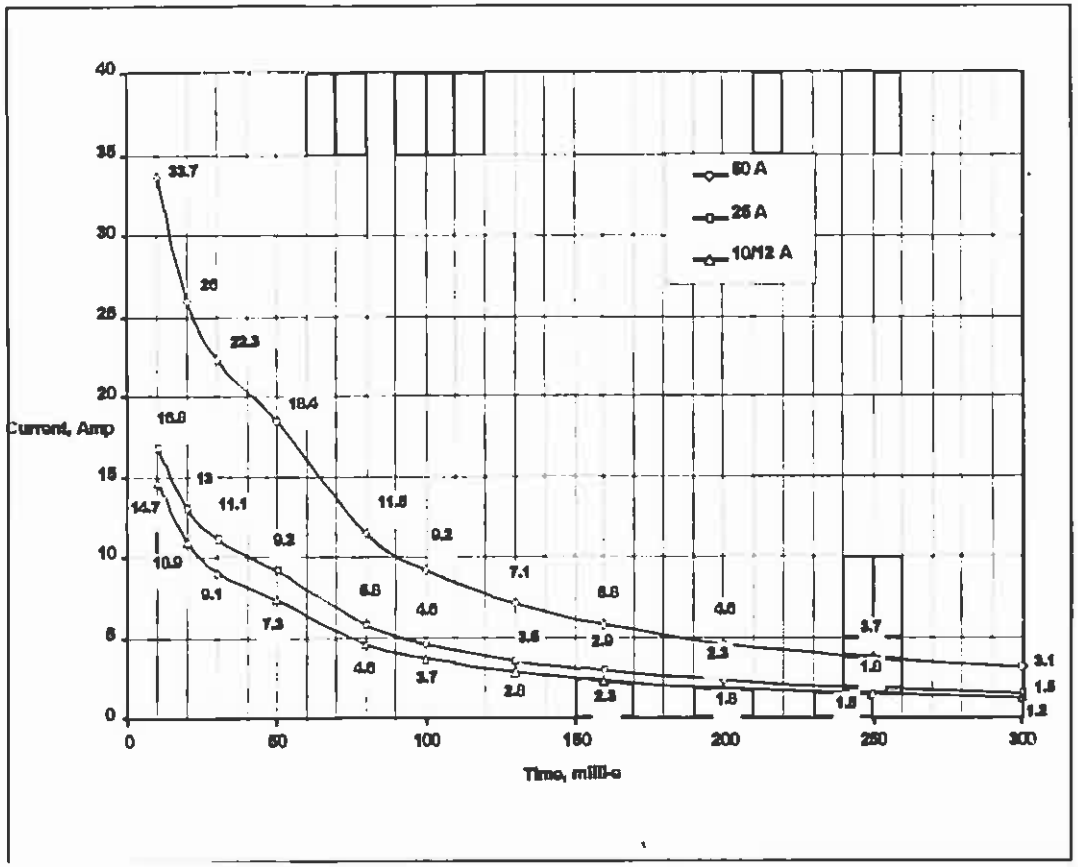

Figure 10-14: Reverse current limits 10mS-300mS

DATE:	TEST CONDUCTOR	QA	CUSTOMER

Questo documento contiene informazioni di proprietà di CARLO GAVAZZI SPACE SpA. Tutti i diritti sono riservati.
All information contained in this document are property of CARLO GAVAZZI SPACE SpA. All right reserved.

UUT DATA :	Model	Item	C.I.	S/N

STEP n°	TEST SEQUENCE	EXPECTED VALUE	MEASURED VALUE	REMARKS

10.7 SR-A: ARC DISCHARGE SUSCEPTIBILITY

SR-A.1	**OBJECTIVE** To verify the immunity of the UUT to due to a repetitive electrostatic arc discharge. The test shall be performed at closed box on the four corners of the unit.			
SR-A.2	**TEST SET-UP** Disconnect the unit from all the cables and loads, except from bonding connection			
SR-A.3	**TEST FEATURE** 3) Test shall be performed with ESD source 4) For conducted test the discharge probe shall be positioned in contact with each UUT wall / chassis corner *ESD Source Characteristics:* - Amplitude: 4kV - Repetition rate: between 3Hz and 10Hz - Duration: > 5min			
SR-A.4	**SUSCEPTIBILITY CRITERIA** No permanent degradation and no failure propagation across the UUT interfaces shall result after ESD test			
SR-A.5	**TEST RUN** Verify that UUT is disconnected from all the cables, except from bonding	OK		
SR-A.6	Apply electrostatic discharge	OK		
SR-A.7	Connect the cables	OK		HEATERS NOT CONNECTED

DATE:	TEST CONDUCTOR	QA	CUSTOMER

Questo documento contiene informazioni di proprietà di CARLO GAVAZZI SPACE SpA. Tutti i diritti sono riservati.
All information contained in this document are property of CARLO GAVAZZI SPACE SpA. All right reserved.

UUT DATA :	Model	Item	C.I.	S/N

STEP n°	TEST SEQUENCE	EXPECTED VALUE	MEASURED VALUE	REMARKS
SR-A.8	**SECTION A CHECK**			
SR-A.9	Connect the supply lines AI_120V and AI_120V_RTN (J100) to power switch box	OK		A section supplied
SR-A.10	Set main bus to 120V	OK		
SR-A.11	Switch ON the "power switch "of "power switch box"	OK		
SR-A.12	Using CAN BUS 30 set the unit in nominal condition	OK		
SR-A.13	Take note of the input current	16,00A<Iin<20,00A		
SR-A.14	From remote, with CAN BUS 30 monitor the OK/NOK flags of all the Power Boards. All the flags shall be in the OK status	OK		CAN BUS 30 check
SR-A.15	From remote, with CAN BUS 31 monitor the OK/NOK flags of all the Power Boards. All the flags shall be in the OK status	OK		CAN BUS 31 check
SR-A.16	Verify with multimeter the presence of 28V on following outlets : TPD3 ER1_N TPD0 TTPD_N	 27V<V<29V 27V<V<29V 27V<V<29V 27V<V<29V		
SR-A.17	By remote, with CAN BUS 30, verify the analog telemetries of the output voltage of: PB2 SN1 PB2 SN3 PB2 SN4 PB2 SN7	 27V<V<29V 27V<V<29V 27V<V<29V 27V<V<29V		CAN BUS 30 Analog telemetries check
SR-A.18	By remote, with CAN BUS 31, verify the analog telemetries of the output voltage of: PB2 SN1 PB2 SN3 PB2 SN4 PB2 SN7	 27V<V<29V 27V<V<29V 27V<V<29V 27V<V<29V		CAN BUS 31 Analog telemetries check

DATE:	TEST CONDUCTOR	QA	CUSTOMER

Questo documento contiene informazioni di proprietà di CARLO GAVAZZI SPACE SpA. Tutti i diritti sono riservati.
All information contained in this document are property of CARLO GAVAZZI SPACE SpA. All right reserved.

UUT DATA :	Model	Item	C.I.	S/N

STEP n°	TEST SEQUENCE	EXPECTED VALUE	MEASURED VALUE	REMARKS
SR-A.19	Using CAN BUS 31 switch ON by remote, in ESEM 3-A-1 window, the outlet 6	OK		CAN BUS 31 digital command check
SR-A.20	Verify that command is correctly executed	OK		
SR-A.21	Using CAN BUS 31 switch OFF by remote, in ESEM 3-A-1 window, the outlet 6	OK		CAN BUS 31 digital command check
SR-A.22	Verify that command is correctly executed	OK		
SR-A.23	Switch off power switch box	OK		
SR-A.24	Switch off main bus	OK		
SR-A.25	**SECTION B CHECK**			
SR-A.26	Connect the supply lines BI_120V and BI_120V_RTN (J200) to power switch box	OK		B section supplied
SR-A.27	Set main bus to 120V	OK		
SR-A.28	Switch ON the "power switch "of "power switch box"	OK		
SR-A.29	Using CAN BUS 31 set the unit in nominal condition	OK		
SR-A.30	Take note of the input current	16,00A<Iin<20,00A		
SR-A.31	From remote, with CAN BUS 30 monitor the OK/NOK flags of all the Power Boards. All the flags shall be in the OK status	OK		CAN BUS 30 check
SR-A.32	From remote, with CAN BUS 31 monitor the OK/NOK flags of all the Power Boards. All the flags shall be in the OK status	OK		CAN BUS 31 check
SR-A.33	Verify with multimeter the presence of 28V on following outlets : TPD3 ER1_N TPD0 TTPD_N	 27V<V<29V 27V<V<29V 27V<V<29V 27V<V<29V		
SR-A.34	By remote, with CAN BUS 30, verify the analog telemetries of the output voltage of: PB2 SN2 PB2 SN5 PB2 SN6 PB2 SN8	 27V<V<29V 27V<V<29V 27V<V<29V 27V<V<29V		CAN BUS 30 Analog telemetries check

DATE:	TEST CONDUCTOR	QA	CUSTOMER

Questo documento contiene informazioni di proprietà di CARLO GAVAZZI SPACE SpA. Tutti i diritti sono riservati.
All information contained in this document are property of CARLO GAVAZZI SPACE SpA. All right reserved.

UUT DATA :	Model	Item	C.I.	S/N

STEP n°	TEST SEQUENCE	EXPECTED VALUE	MEASURED VALUE	REMARKS
SR-A.35	By remote, with CAN BUS 31, verify the analog telemetries of the output voltage of: PB2 SN2 PB2 SN5 PB2 SN6 PB2 SN8	 27V<V<29V 27V<V<29V 27V<V<29V 27V<V<29V		CAN BUS 31 Analog telemetries check
SR-A.36	Using CAN BUS 30 switch ON by remote, in ESEM 3-A-1 window, the outlet 6	OK		CAN BUS 30 digital command check
SR-A.37	Verify that command is correctly executed	OK		
SR-A.38	Using CAN BUS 30 switch OFF by remote, in ESEM 3-A-1 window, the outlet 6	OK		CAN BUS 30 digital command check
SR-A.39	Verify that command is correctly executed	OK		
SR-A.40	Switch off power switch box	OK		
SR-A.41	Switch off main bus	OK		

DATE:	TEST CONDUCTOR	QA	CUSTOMER

Questo documento contiene informazioni di proprietà di CARLO GAVAZZI SPACE SpA. Tutti i diritti sono riservati.
All information contained in this document are property of CARLO GAVAZZI SPACE SpA. All right reserved.

UUT DATA :	Model	Item	C.I.	S/N

STEP n°	TEST SEQUENCE	EXPECTED VALUE	MEASURED VALUE	REMARKS

10.8 RE02, SECTION "A" RADIATED EMISSIONS

RE02-1	**OBJECTIVE** To verify that UUT radiated electromagnetic emission (related only to the unit) due to electric field does not exceed the limits The test is performed at closed box			
RE02-2	**TEST SETUP** Test set up is shown in Figure 6-11			
RE02-3	**TEST FEATURE** Narrow-band electric fields generated by the subsystem equipment and measured at 1m distance shall not exceed the limits shown in Table 10-2 : Field emissions limits. Operational bus - J100 connector, positive line (AI_120V) - J100 connector, return (AI_120V_RTN)			
RE02-4	**TEST RUN** Verify UUT is switched off	OK		
RE02-5	Verify TE is switched on	OK		
RE02-6	Verify the antennas are placed 1 meter far from UUT	OK		
RE02-7	Verify the ambient noise both with and without TE on	OK		
RE02-8	Verify the emission are 6dB below the limit otherwise check the TE emission	OK		
RE02-9	Connect the UUT as shown in Figure 6-11	OK		
RE02-10	Connect hot and return power bus line (J100) to power supply through the LISN	OK		

DATE:	TEST CONDUCTOR	QA	CUSTOMER

Questo documento contiene informazioni di proprietà di CARLO GAVAZZI SPACE SpA. Tutti i diritti sono riservati.
All information contained in this document are property of CARLO GAVAZZI SPACE SpA. All right reserved.

UUT DATA :	Model	Item	C.I.	S/N

STEP n°	TEST SEQUENCE	EXPECTED VALUE	MEASURED VALUE	REMARKS
RE02-11	Set the power supply output to 120V	120V ± 0.1V		
RE02-12	Switch ON the "power switch "of "power switch box"	OK		
RE02-13	From remote set the unit in nominal configuration	OK		
RE02-14	Take note of the input current	16,00A<Iin<20,00A		
RE02-15	Perform the measurement	OK		
RE02-16	Verify that the emissions are below the limit given in Table 10-2 : Field emissions limits	OK		
RE02-17	Switch Off the "power switch "of "power switch box"	OK		
RE02-18	Switch off the main bus	OK		

DATE:	TEST CONDUCTOR	QA	CUSTOMER

Questo documento contiene informazioni di proprietà di CARLO GAVAZZI SPACE SpA. Tutti i diritti sono riservati.
All information contained in this document are property of CARLO GAVAZZI SPACE SpA. All right reserved.

Frequency	Emissions
14 kHz–10 MHz	56 dBµV/m
10 MHz–259 MHz	Increasing log linearly with increasing frequency from 56 to 86 dBµV/m (16dB per decade)
259 MHz–10 GHz	Increasing log linearly with increasing frequency from 46 to 72 dBµV/m (16dB per decade)
13.5–15.5 GHz	72 dBµV/m

Table 10-2 : Field emissions limits

Questo documento contiene informazioni di proprietà di CARLO GAVAZZI SPACE SpA. Tutti i diritti sono riservati.
All information contained in this document are property of CARLO GAVAZZI SPACE SpA. All right reserved.

UUT DATA :	Model	Item	C.I.	S/N

STEP n°	TEST SEQUENCE	EXPECTED VALUE	MEASURED VALUE	REMARKS

10.9 RE02, SECTION "B" RADIATED EMISSIONS

RE02-19	OBJECTIVE To verify that UUT radiated electromagnetic emission (related only to the unit) due to electric field does not exceed the limits The test is performed at closed box			
RE02-20	**TEST SETUP** Test set up is shown in Figure 6-11			
RE02-21	**TEST FEATURE** Narrow-band electric fields generated by the subsystem equipment and measured at 1m distance shall not exceed the limits shown in Table 10-2 : Field emissions limits. Operational bus - J200 connector, positive line (BI_120V) - J200 connector, return (BI_120V_RTN)			
RE02-22	**TEST RUN** Verify UUT is switched off	OK		
RE02-23	Verify TE is switched on	OK		
RE02-24	Verify the antennas are placed 1 meter far from UUT	OK		
RE02-25	Verify the ambient noise both with and without TE on	OK		
RE02-26	Verify the emission are 6dB below the limit otherwise check the TE emission	OK		
RE02-27	Connect the UUT as shown in Figure 6-11	OK		
RE02-28	Connect hot and return power bus line (J200) to power supply through the LISN	OK		
RE02-29	Set the power supply output to 120V	120V ± 0.1V		

DATE:	TEST CONDUCTOR	QA	CUSTOMER

Questo documento contiene informazioni di proprietà di CARLO GAVAZZI SPACE SpA. Tutti i diritti sono riservati.
All information contained in this document are property of CARLO GAVAZZI SPACE SpA. All right reserved.

UUT DATA :	Model	Item	C.I.	S/N

STEP n°	TEST SEQUENCE	EXPECTED VALUE	MEASURED VALUE	REMARKS
RE02-30	Switch ON the "power switch "of "power switch box"	OK		
RE02-31	From remote set the unit in nominal configuration	OK		
RE02-32	Take note of the input current	16,00A<Iin<20,00A		
RE02-33	Perform the measurement	OK		
RE02-34	Verify that the emissions are below the limit given in Table 10-2 : Field emissions limits	OK		
RE02-35	Switch Off the "power switch "of "power switch box"	OK		
RE02-36	Switch off the main bus	OK		

DATE:	TEST CONDUCTOR	QA	CUSTOMER

Questo documento contiene informazioni di proprietà di CARLO GAVAZZI SPACE SpA. Tutti i diritti sono riservati.
All information contained in this document are property of CARLO GAVAZZI SPACE SpA. All right reserved.

UUT DATA :	Model	Item	C.I.	S/N

STEP n°	TEST SEQUENCE	EXPECTED VALUE	MEASURED VALUE	REMARKS

10.10 RS03 SECTION "A" RADIATED SUSCEPTIBILITY

RS-E_R-0.1	**OBJECTIVE** To verify the immunity of the UUT to radiated electromagnetic susceptibility due to electrical field. The test is performed at closed box			
RS-E_R-0.2	**TEST SET-UP** Test set up is shown in Figure 6-12			
RS-E_R-0.3	**TEST FEATURE** For the unit irradiation see *Table 10-3: RS 03 Emission limits* Operational bus J100 connector, positive line (AI_120V) J100 connector, return (AI_120V_RTN)			
RS-E_R-0.4	**SUSCEPTIBILITY CRITERIA** The subsystem equipment shall not exhibit any malfunction, degradation of performance or deviation beyond the tolerance indicated in its individual specification.			
RS-E_R-0.5	**TEST RUN** Verify UUT is switched off	OK		
RS-E_R-0.6	Connect the UUT as shown in Figure 6-12	OK		
RS-E_R-0.7	Connect hot and return power bus line to power supply through the LISN	OK		
RS-E_R-0.8	Verify UUT TE is switched on	OK		
RS-E_R-0.9	Connect the oscilloscope to following outputs: TPD3 ER1_N	OK		These voltages will be monitored during radiated field emission

DATE:	TEST CONDUCTOR	QA	CUSTOMER

Questo documento contiene informazioni di proprietà di CARLO GAVAZZI SPACE SpA. Tutti i diritti sono riservati.
All information contained in this document are property of CARLO GAVAZZI SPACE SpA. All right reserved.

UUT DATA :	Model	Item	C.I.	S/N

STEP n°	TEST SEQUENCE	EXPECTED VALUE	MEASURED VALUE	REMARKS
	TPD0 TTPD_N AH_TRD (120V outlet)			
RS-E_R-0.10	Set main bus to 120V	120V ± 1V		
RS-E_R-0.11	Switch ON the "power switch "of "power switch box"	OK		
RS-E_R-0.12	Set the unit in nominal configuration	OK		
RS-E_R-0.13	Take note of the input current from main bus	OK		
RS-E_R-0.14	Start with radiated emission	OK		
RS-E_R-0.15	During emissions verify the following parameters:	OK		
RS-E_R-0.16	The voltage of: TPD3 ER1_N TPD0 TTPD_N AH_TRD (120V outlet)			Add acquired pictures in the end of the document
RS-E_R-0.17	From remote, with CAN BUS 30 monitor the OK/NOK flags of all the Power Boards. All the flags shall be in the OK status	OK		CAN BUS 30 check
RS-E_R-0.18	From remote, with CAN BUS 31 monitor the OK/NOK flags of all the Power Boards. All the flags shall be in the OK status	OK		CAN BUS 31 check
RS-E_R-0.19	Read from remote the telemetries indicated in "Read input" software window: Vbus Ibus	120V±9.5V 16,00A<Iin<20,00A		Telemetries check
RS-E_R-0.20	Switch Off the "power switch "of "power switch box"	OK		Perform this action when the emissions have been completed
RS-E_R-0.21	Switch off main bus	OK		

DATE:	TEST CONDUCTOR	QA	CUSTOMER

Questo documento contiene informazioni di proprietà di CARLO GAVAZZI SPACE SpA. Tutti i diritti sono riservati.
All information contained in this document are property of CARLO GAVAZZI SPACE SpA. All right reserved.

UUT DATA :	Model	Item	C.I.	S/N

STEP n°	TEST SEQUENCE	EXPECTED VALUE	MEASURED VALUE	REMARKS

Frequency/Range	Radiated Electric Field Level
14 kHz–10 MHz	5 V/m
200 MHz–8 GHz	60 V/m
8 GHz–10 GHz	20 V/m
2.2 GHz	161 V/m
8.5 GHz	79 V/m
13.7 GHz–15.2 GHz	250 V/m

Table 10-3: RS 03 Emission limits

DATE:	TEST CONDUCTOR	QA	CUSTOMER

Questo documento contiene informazioni di proprietà di CARLO GAVAZZI SPACE SpA. Tutti i diritti sono riservati.
All information contained in this document are property of CARLO GAVAZZI SPACE SpA. All right reserved.

UUT DATA :	Model	Item	C.I.	S/N

STEP n°	TEST SEQUENCE	EXPECTED VALUE	MEASURED VALUE	REMARKS

10.11 RS03 SECTION "B" RADIATED SUSCEPTIBILITY

RS-E_R-0.22	OBJECTIVE To verify the immunity of the UUT to radiated electromagnetic susceptibility due to electrical field. The test is performed at closed box			
RS-E_R-0.23	**TEST SET-UP** Test set up is shown in Figure 6-12			
RS-E_R-0.24	**TEST FEATURE** For the unit irradiation see *Table 10-3: RS 03 Emission limits* Operational bus J200 connector, positive line (BI_120V) J200 connector, return (BI_120V_RTN)			
RS-E_R-0.25	**SUSCEPTIBILITY CRITERIA** The subsystem equipment shall not exhibit any malfunction, degradation of performance or deviation beyond the tolerance indicated in its individual specification.			
RS-E_R-0.26	**TEST RUN** Verify UUT is switched off	OK		
RS-E_R-0.27	Connect the UUT as shown in Figure 6-12	OK		
RS-E_R-0.28	Connect hot and return power bus line to power supply through the LISN	OK		
RS-E_R-0.29	Verify UUT TE is switched on	OK		
RS-E_R-0.30	Connect the oscilloscope to following outputs: TPD3 ER1_N	OK		These voltages will be monitored during radiated field emission

DATE:	TEST CONDUCTOR	QA	CUSTOMER

Questo documento contiene informazioni di proprietà di CARLO GAVAZZI SPACE SpA. Tutti i diritti sono riservati.
All information contained in this document are property of CARLO GAVAZZI SPACE SpA. All right reserved.

UUT DATA :	Model	Item	C.I.	S/N

STEP n°	TEST SEQUENCE	EXPECTED VALUE	MEASURED VALUE	REMARKS
	TPD0 TTPD_N BH_TRD (120V outlet)			
RS-E_R-0.31	Set main bus to 120V	120V ± 1V		
RS-E_R-0.32	Switch ON the "power switch "of "power switch box"	OK		
RS-E_R-0.33	Set the unit in nominal configuration	OK		
RS-E_R-0.34	Take note of the input current from main bus	OK		
RS-E_R-0.35	Start with radiated emission	OK		
RS-E_R-0.36	During emissions verify the following parameters:	OK		
RS-E_R-0.37	The voltage of: TPD3 ER1_N TPD0 TTPD_N AH_TRD (120V outlet)			Add acquired pictures in the end of the document
RS-E_R-0.38	From remote, with CAN BUS 30 monitor the OK/NOK flags of all the Power Boards. All the flags shall be in the OK status	OK		CAN BUS 30 check
RS-E_R-0.39	From remote, with CAN BUS 31 monitor the OK/NOK flags of all the Power Boards. All the flags shall be in the OK status	OK		CAN BUS 31 check
RS-E_R-0.40	Read from remote the telemetries indicated in "Read input" software window: Vbus Ibus	120V±9.5V 16,00A<Iin<20,00A		Telemetries check
RS-E_R-0.41	Switch Off the "power switch "of "power switch box"	OK		Perform this action when the emissions have been completed
RS-E_R-0.42	Switch off main bus	OK		

DATE:	TEST CONDUCTOR	QA	CUSTOMER

Questo documento contiene informazioni di proprietà di CARLO GAVAZZI SPACE SpA. Tutti i diritti sono riservati.
All information contained in this document are property of CARLO GAVAZZI SPACE SpA. All right reserved.

UUT DATA :	Model	Item	C.I.	S/N

STEP n°	TEST SEQUENCE	EXPECTED VALUE	MEASURED VALUE	REMARKS

11.CONCLUSIONS

Write the conclusions in the report after tests.

DATE:	TEST CONDUCTOR	QA	CUSTOMER

Questo documento contiene informazioni di proprietà di CARLO GAVAZZI SPACE SpA. Tutti i diritti sono riservati.
All information contained in this document are property of CARLO GAVAZZI SPACE SpA. All right reserved.