ORIGINALE ARCHIVIO

CARLO GAVAZZI SPACE SpA

AMS02-PDS

Tipo Doc.: *Doc.Type:*	REPORT			N° DRD: *DRD N°:*	DEL 104
N° Doc.: *Doc. N°:*	**PDS-RP-CGS-118**	Ediz.: *Issue:* **1**	Data: *Date:* **09/09/09**	Pagina *Page* **1**	Di *Of* **35**
Titolo : *Title :*	PDS-PFM VIBRATION TEST REPORT				

	Nome & Funzione *Name & Function*	Firma *Signature*	Data *Date*
Preparato da: *Prepared by:*	Duo' F. (DT/MT/)		9/9/9
Approvato da: *Approved by:*	X Alia S. (DT/EE/)		9/9/09
	Francini E. (PA/QA)		09/09/09
	X Molina M. (DT/MT/)		09/09/09
	Cinquepalmi C. (PA/CC)		10/09/09
Applicazione autorizzata da: *Application authorized by:*	Olivier M. (PM)		10/09/2009

Customer / Higher Level Contractor

Accettato da: *Accepted by:*	ASI		
Approvato da: *Approved by:*	ASI		

LISTA DI DISTRIBUZIONE *DISTRIBUTION LIST*	N	A	I
Interna / *Internal*			
Olivier M. (PM)	1	X	
Francini E. (PA/QA)	1		X
Alia S. (DT/EE)	1	X	
Esterna / *External*			
Russo E. (ASI)	1		X

N=Numero di copie A=Applicazione I=Informazione
N=Number of copy A=Application I=Information

Gestione documenti: *Data Management:* Firma / *Signature* Data / *Date* 10/09/09

File: PDS-RP-CGS-118 is1.doc

Questo documento contiene informazioni di proprietà di CARLO GAVAZZI SPACE SpA: Tutti i diritti sono riservati
All information contained in this document are property of CARLO GAVAZZI SPACE SpA. All right reserved.

REGISTRAZIONE DELLE MODIFICHE / *CHANGE RECORD*

EDIZIONE *ISSUE*	DATA *DATE*	AUTORIZZAZIONE *CHANGE AUTHORITY*	OGGETTO DELLA MODIFICA E SEZIONI AFFETTE *REASON FOR CHANGE AND AFFECTED SECTIONS*
1	09/09/09		First Issue

Questo documento contiene informazioni di proprietà di CARLO GAVAZZI SPACE SpA: Tutti i diritti sono riservati
All information contained in this document are property of CARLO GAVAZZI SPACE SpA. All right reserved.

LISTA DELLE PAGINE VALIDE / *LIST OF VALID PAGES*

PAGINA *PAGE*	EDIZIONE *ISSUE*	PAGINA *PAGE*	EDIZIONE *ISSUE*	PAGINA *PAGE*	EDIZIONE *ISSUE*	PAGINA *PAGE*	EDIZIONE *ISSUE*	PAGINA *PAGE*	EDIZIONE *ISSUE*
1 - 35	1								
Annex A Page 1-35	1								
Annex B Page 1-12	1								
Annex C Page 1-161	1								

Questo documento contiene informazioni di proprietà di CARLO GAVAZZI SPACE SpA: Tutti i diritti sono riservati
All information contained in this document are property of CARLO GAVAZZI SPACE SpA. All right reserved.

TABLE OF CONTENT

1. SCOPE 7

2. DOCUMENTS 7

2.1 APPLICABLE DOCUMENTS 7
2.2 REFERENCE DOCUMENTS 7

3. ACRONYMS 8

4. TEST ARTICLE 9

5. TEST OBJECTIVE 11

6. FACILITY DESCRIPTION 12

6.1 TEST SETUP 12
6.1.1 COORDINATE SYSTEM USED 12
6.1.2 SHAKER AND SLIDING TABLE DETAILS 12
6.2 FIXTURE CHARACTERISTICS 14
6.3 CONNECTION TO THE HEAD EXPANDER (SHAKER) 16
6.4 CONNECTION TO THE SLIDING TABLE 17
6.5 ACCELEROMETER CHARACTERISTICS 18

7. TEST CONDITIONS 18

8. TEST RESPONSIBILITY 18

9. SUCCESS CRITERIA 19

10. OPERATIONAL RESTRICTIONS 19

11. NOTCHING 20

12. PARTICIPANTS REQUIRED 21

12.1 GENERAL 21
12.2 QA WITNESS OF TESTS AND SIGN-OFF 21

13. NON-CONFORMANCE AND FAILURES 21

14. CALIBRATION REQUIREMENTS 21

15. MEASUREMENT ACCURACY 23

16. GENERAL PROCEDURE 23

16.1 QUALIFICATION TEST LEVELS 23
16.1.1 RESONANCE SEARCH TEST LEVEL 23
16.1.2 RANDOM VIBRATION TEST LEVEL 24

17. PDS ACCELEROMETER DISPOSITION 25

17.1 INSTRUMENTATION PLAN – X AXIS 26
17.1.1 FIXTURE CALIBRATION UNLOADED – X AXIS 26
17.1.2 FIXTURE CALIBRATION LOADED – X AXIS 27
17.1.3 UNIT RESONANCE SEARCH AND RANDOM VIBRATION TEST – X AXIS 28
17.2 INSTRUMENTATION PLAN – Y AXIS 29

Questo documento contiene informazioni di proprietà di CARLO GAVAZZI SPACE SpA: Tutti i diritti sono riservati
All information contained in this document are property of CARLO GAVAZZI SPACE SpA. All right reserved.

17.2.1 FIXTURE CALIBRATION UNLOADED – Y AXIS 29
17.2.2 FIXTURE CALIBRATION LOADED – Y AXIS 30
17.2.3 UNIT RESONANCE SEARCH AND RANDOM VIBRATION TEST – Y AXIS 31
17.3 INSTRUMENTATION PLAN – Z AXIS 32
17.3.1 FIXTURE CALIBRATION UNLOADED – Z AXIS 32
17.3.2 FIXTURE CALIBRATION LOADED – Z AXIS 33
17.3.3 UNIT RESONANCE SEARCH AND RANDOM VIBRATION TEST – Z AXIS 34

18. CONCLUSIONS 35

Questo documento contiene informazioni di proprietà di CARLO GAVAZZI SPACE SpA: Tutti i diritti sono riservati
All information contained in this document are property of CARLO GAVAZZI SPACE SpA. All right reserved.

LIST OF TABLES

Tab 5-1 - PDS test objective – requirement matrix 11
Tab 9-1 - PDS test success criteria 19
Tab 11-1 - Maximum Expected Flight Level 20
Tab 16-1 – MWL Random vibration test level for the 3 axes 24
Tab 16-2 – Low Random Vibration Level for 3 axes 24
Tab 17-1- Instrumentation for Fixture Calibration (Unloaded) - X axis 26
Tab 17-2- Instrumentation for Fixture Calibration (Loaded) - X axis 27
Tab 17-3- Instrumentation for Resonance Search and Random Vibration Test - X axis 28
Tab 17-4- Instrumentation for Fixture Calibration (Unloaded) - Y axis 29
Tab 17-5- Instrumentation for Fixture Calibration (Loaded) - Y axis 30
Tab 17-6- Instrumentation for Resonance Search and Random Vibration Test - Y axis 31
Tab 17-7- Instrumentation for Fixture Calibration (Unloaded) - Z axis 32
Tab 17-8- Instrumentation for Fixture Calibration (Loaded) - Z axis 33
Tab 17-9- Instrumentation for Resonance Search and Random Vibration Test - Z axis 34

LIST OF FIGURES

Fig 4-1 - PDS 9
Fig 4-2 - PDS Main dimensions 10
Fig 6-1 - PDS in the used coordinate system 12
Fig 6-2 - Shaker in position for the X and Z directions of test 12
Fig 6-3 - Shaker in position for the Y direction of test 13
Fig 6-4 - Pattern of the PDS I/F plate 14
Fig 6-5 – PDS connection with fixture – exploded view 15
Fig 6-6 – PDS connection with fixture 15
Fig 6-7 – Connection with expander - M12 screws position 16
Fig 6-8 – Connection with expander - M10 screws position 16
Fig 6-9 – Connection to sliding table 17
Fig 6-10 – Connection to adaptation table 17
Fig 17-1 - PDS accelerometer disposition 25

Questo documento contiene informazioni di proprietà di CARLO GAVAZZI SPACE SpA: Tutti i diritti sono riservati
All information contained in this document are property of CARLO GAVAZZI SPACE SpA. All right reserved.

1. SCOPE

This document presents the results of the vibration test performed on the AMS-02 Power Distribution System Proto Flight Model (PDS-PFM) for the vibration environment according to AD2 and AD4.

Step by Step Compiled Procedure is reported in Annex A
PVSs are collected in Annex B

Detailed information regarding:

-Test Condition
-Test Performance
-Performed Test Run and Plots
-Test Setup
-Instrumentation list and related calibration

are collected in Annex C

2. DOCUMENTS

2.1 APPLICABLE DOCUMENTS

AD #	Doc Number	Issue	Date	Rev	Title
1	**AMSCD-PL-CGS-001**	1	04/02/2008		AMS02 PA Plan
2	**AMS-RQ-CGS-002**	1	April 2007		POWER DISTRIBUTION SYSTEM (PDS) SPECIFICATIONS
3	**PDS-TN-CGS-010**	1	25/03/2008		PDS FM STRUCTURAL ANALYSIS
4	**JSC28792**	E	March 2005	-	AMS 02 Structural Verification Plan for the Space Transportation System and the International Space Station
5	*PDS-PL-CGS-003*	*1*	*11-05-2009*	*N.A*	*AMS02 PDS DESIGN DEVELOPMENT AND QUALIFICATION PLAN*

2.2 REFERENCE DOCUMENTS

RD #	Doc Number	Issue	Date	Rev	Title
1	**ECSS-E-10-03**	A	15/02/2002		Space engineering - testing
2	**PDS-PR-CGS-013**	2	16/07/2009		PDS-PFM Vibration Test Procedure

Questo documento contiene informazioni di proprietà di CARLO GAVAZZI SPACE SpA: Tutti i diritti sono riservati
All information contained in this document are property of CARLO GAVAZZI SPACE SpA. All right reserved.

3. ACRONYMS

A.D.	APPLICABLE DOCUMENTS
CP	CONTROL POINT
EM	ENGINEERING MODEL
FEM	FINITE ELEMENT MODEL
I/F	INTERFACE
MEFL	MAXIMUM EXPECTED FLIGHT LEVELS
MP	MEASUREMENT POINT
MWL	MAXIMUM WORKMANSHIP LEVELS
R.D.	REFERENCE DOCUMENTS
RMS	ROOT MEAN SQUARE
RS	RESONANCE SEARCH
PDS	POWER DISTRIBUTION SYSTEM
PSD	POWER SPECTRAL DENSITY
UUT	UNIT UNDER TEST
PFM	PROTO FLIGHT MODEL

Questo documento contiene informazioni di proprietà di CARLO GAVAZZI SPACE SpA: Tutti i diritti sono riservati
All information contained in this document are property of CARLO GAVAZZI SPACE SpA. All right reserved.

4. TEST ARTICLE

This procedure shall be applicable to the Proto Flight Model of AMS-02 Power Distribution System PDS;

MODEL	ITEM	Drawing Number/Part Number	S/N	NOTES
PFM	PDS	10-AMS02PDS-000.00	FM01	-

The following figure shows the PDS.

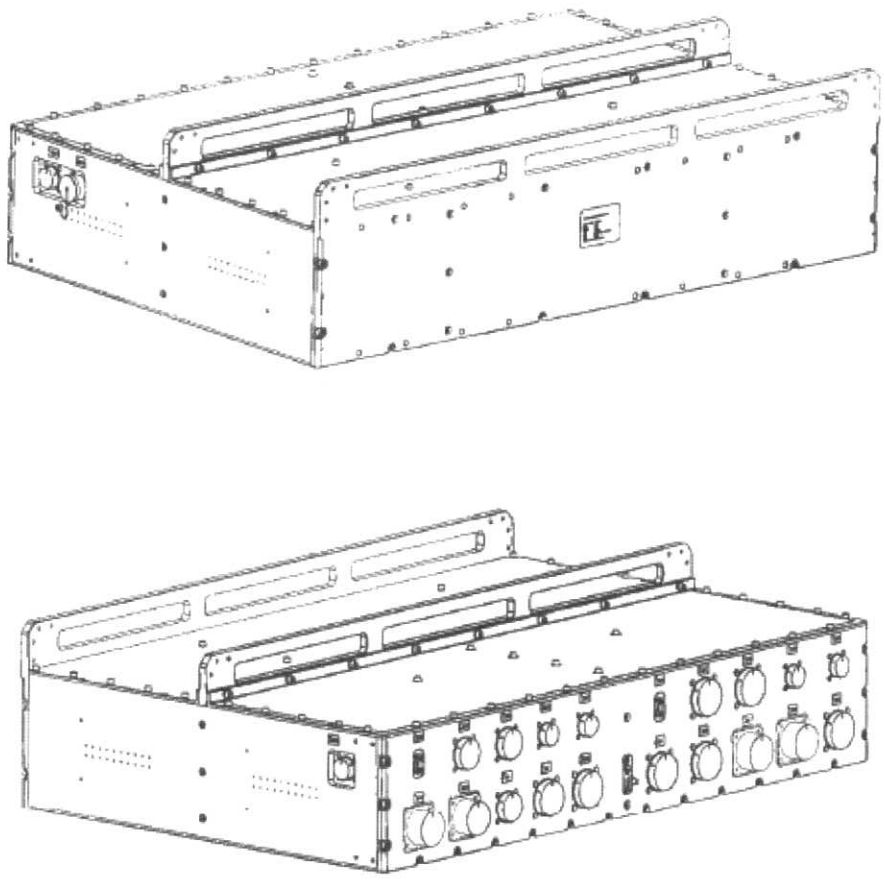

Fig 4-1 - PDS

Questo documento contiene informazioni di proprietà di CARLO GAVAZZI SPACE SpA: Tutti i diritti sono riservati
All information contained in this document are property of CARLO GAVAZZI SPACE SpA. All right reserved.

PDS mass is 48.1 (±5%) kg by CAD estimation.

Next figure shows the PDS dimensions. Unit shall be tested without harness connected.

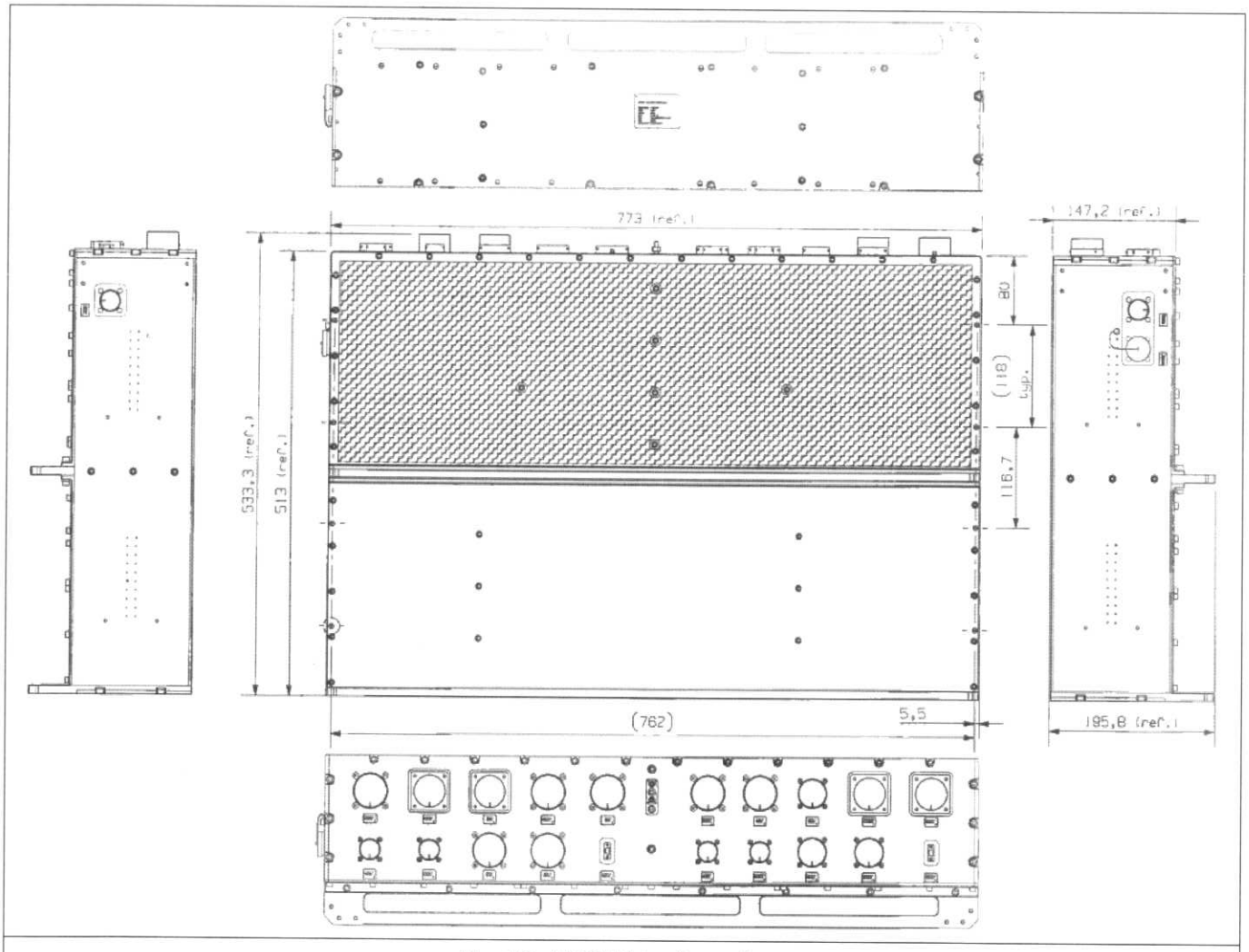

Fig 4-2 - PDS Main dimensions

Questo documento contiene informazioni di proprietà di CARLO GAVAZZI SPACE SpA: Tutti i diritti sono riservati
All information contained in this document are property of CARLO GAVAZZI SPACE SpA. All right reserved.

5. TEST OBJECTIVE

This test is required to demonstrate the unit to withstand the requested qualification environment.
Functional check shall be performed before and after vibration test campaign.

REQUIREMENT NUMBER	DESCRIPTION	PROCEDURE STEP	VERIFICATION METHOD RATIONALE.
13.2 from AD4	**Components Stiffness Requirement:** The first fundamental resonance frequency of the PDS shall be higher than 50 Hz	3.3 – 4.3 – 5.3	Frequency identification from plots of RS.
4.2.2 from AD2	**Random Vibration Loads:** The PDS shall sustain the random vibration loads (all directions) defined in the requirement (qualification level and duration)	3.4 – 4.4 – 5.4	No structural yielding or failures, verified by visual inspection and RS plots comparison. No functional degradation due to vibration loads , verified by functional test

Tab 5-1 - PDS test objective – requirement matrix

Questo documento contiene informazioni di proprietà di CARLO GAVAZZI SPACE SpA: Tutti i diritti sono riservati
All information contained in this document are property of CARLO GAVAZZI SPACE SpA. All right reserved.

6. FACILITY DESCRIPTION

The vibration tests shall be executed at the Università di Perugia SERMS laboratory (located in Terni, Italy) in a proper area.

6.1 TEST SETUP

6.1.1 COORDINATE SYSTEM USED

For reference, the same coordinate system used for structural analysis (Finite Element Model) will be used.

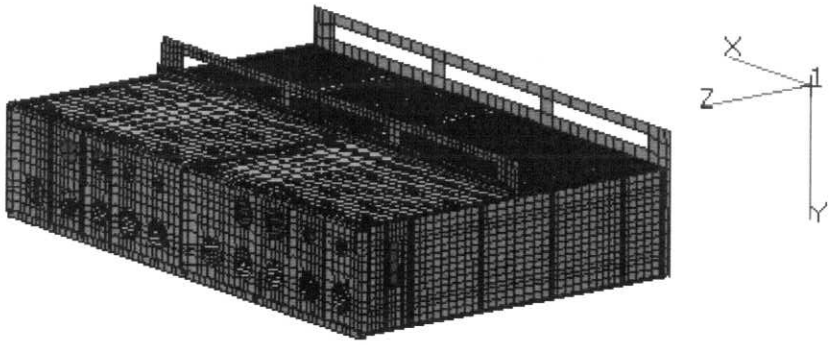

Fig 6-1 - PDS in the used coordinate system

6.1.2 SHAKER AND SLIDING TABLE DETAILS

A sketch of the shaker and sliding table is shown in the following figures

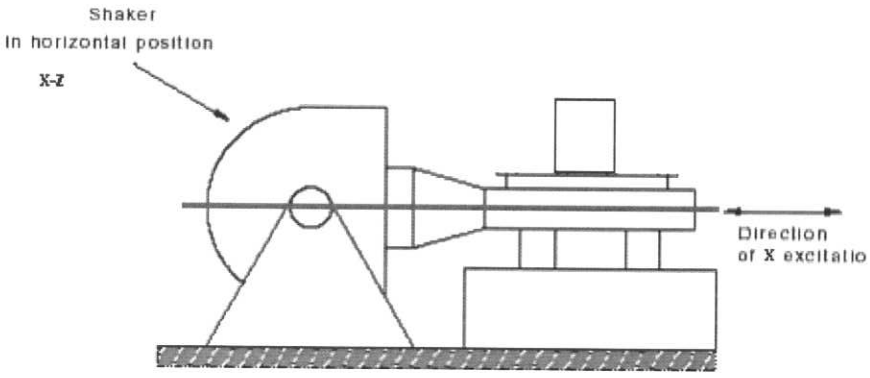

Fig 6-2 - Shaker in position for the X and Z directions of test

Questo documento contiene informazioni di proprietà di CARLO GAVAZZI SPACE SpA: Tutti i diritti sono riservati
All information contained in this document are property of CARLO GAVAZZI SPACE SpA. All right reserved.

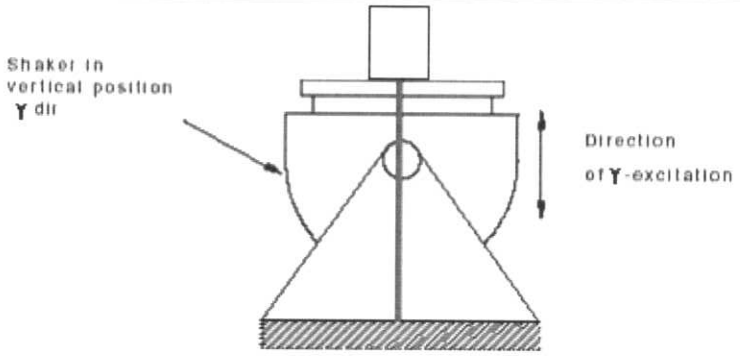

Fig 6-3 - Shaker in position for the Y direction of test

For Y direction vibration a shaker shall be used.
The shaker characteristics shall be annexed to the test data report .

For X and Z direction a sliding table shall be used.
The sliding table characteristics shall be annexed to the test data report .

Questo documento contiene informazioni di proprietà di CARLO GAVAZZI SPACE SpA: Tutti i diritti sono riservati
All information contained in this document are property of CARLO GAVAZZI SPACE SpA. All right reserved.

6.2 FIXTURE CHARACTERISTICS

The test adapter is designed to guarantee that the input vibration levels are transmitted from the exciter to the UUT without relevant amplification/degradation.
As for the whole qualification campaign PDS shall be tested connected to an I/F plate (connected to PDS by means of 50 screw, as in its final configuration on the AMS-02 WAKE radiator) that has the right holes pattern to be connected to the fixture. All the details of the screws are indicated in the following table:

Description	Quantity	P/N	Spec.
Socket head screw H10-32UNF	50	NAS1351N3-10	NAS1351

For screw tightening torque see page **Errore. Il segnalibro non è definito.**.
The pattern of the PDS I/F Plate is shown in Fig 6-4 and the holes for the fixture are marked with a red circle:

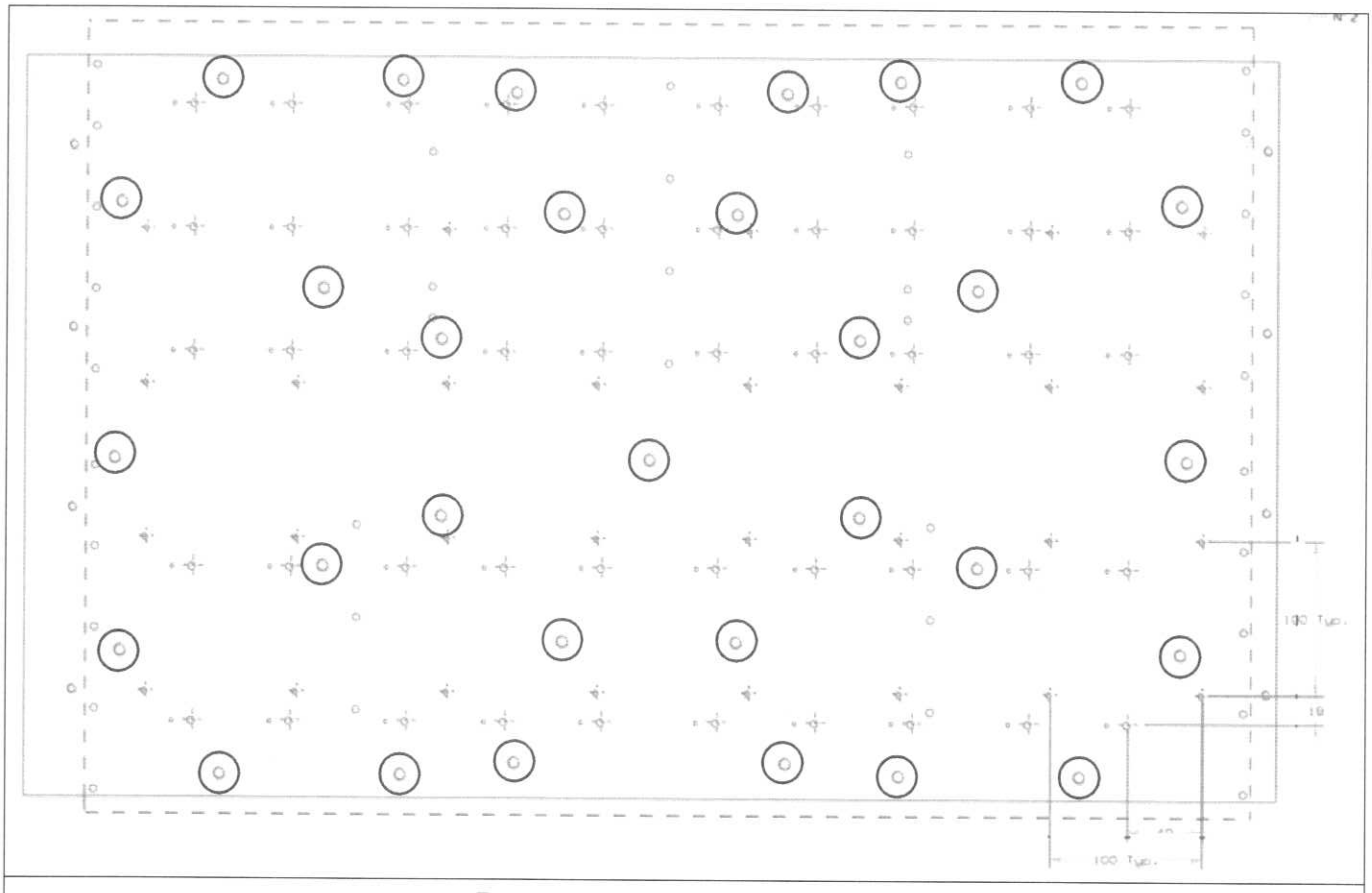

Fig 6-4 - Pattern of the PDS I/F plate

The fixture is a 20mm aluminium plate (Fig 6-5) connected to the interface plate by means of 31 M8x25 screws (socket head screws - ISO4762) furnished by the facility.

Questo documento contiene informazioni di proprietà di CARLO GAVAZZI SPACE SpA: Tutti i diritti sono riservati
All information contained in this document are property of CARLO GAVAZZI SPACE SpA. All right reserved.

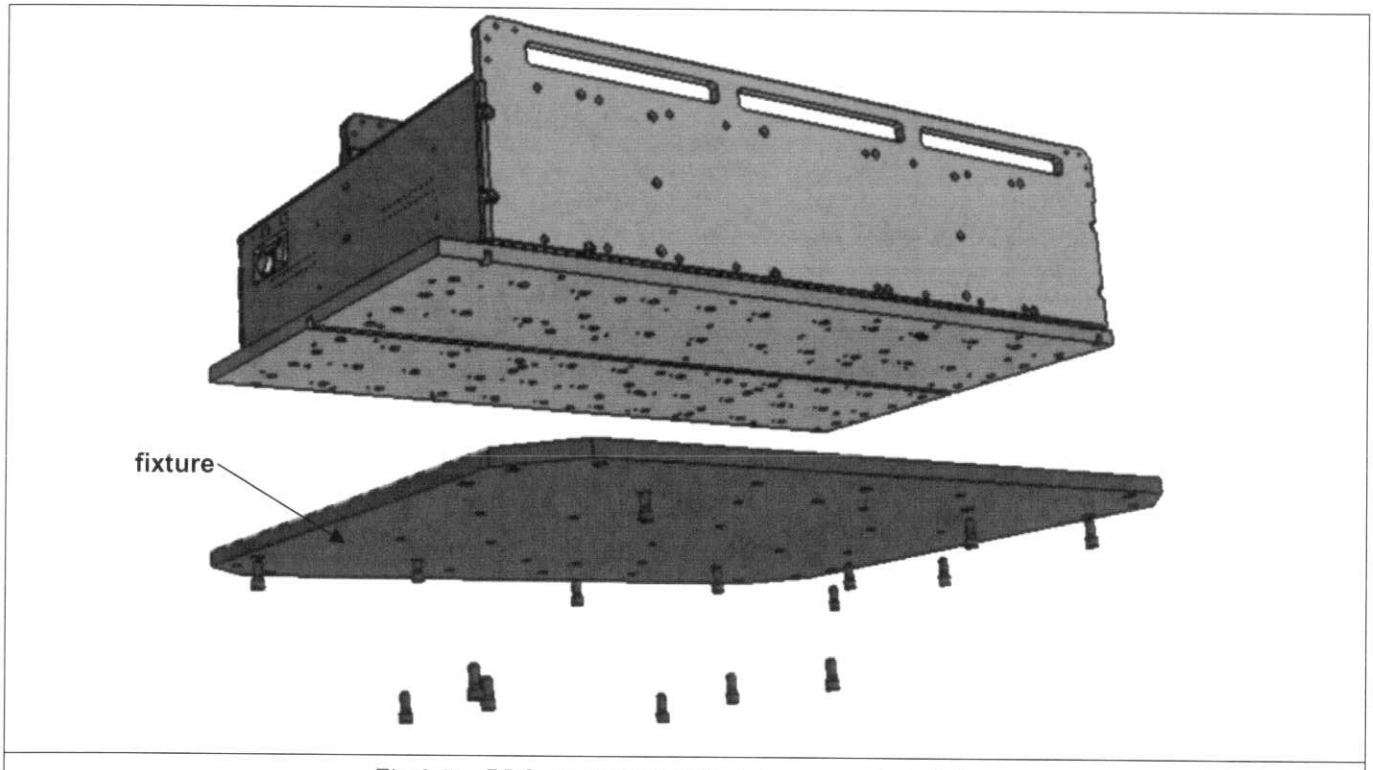

Fig 6-5 – PDS connection with fixture – exploded view

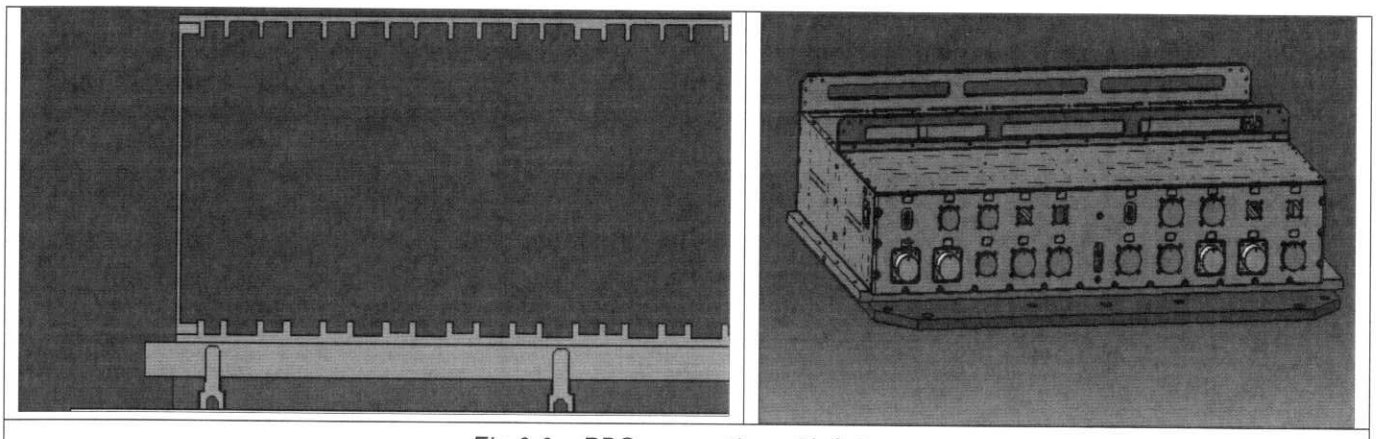

Fig 6-6 – PDS connection with fixture

Questo documento contiene informazioni di proprietà di CARLO GAVAZZI SPACE SpA: Tutti i diritti sono riservati
All information contained in this document are property of CARLO GAVAZZI SPACE SpA. All right reserved.

6.3 CONNECTION TO THE HEAD EXPANDER (SHAKER)

Connection to head expander is provided by 2 different kind of bolt (furnished by the facility):

- 8 M12x25 ISO4762 socket head screws on the edges of fixture (see Fig 6-7)
- 8 M10x50 ISO4762 socket head screws in the centre of the fixture (see Fig 6-8)

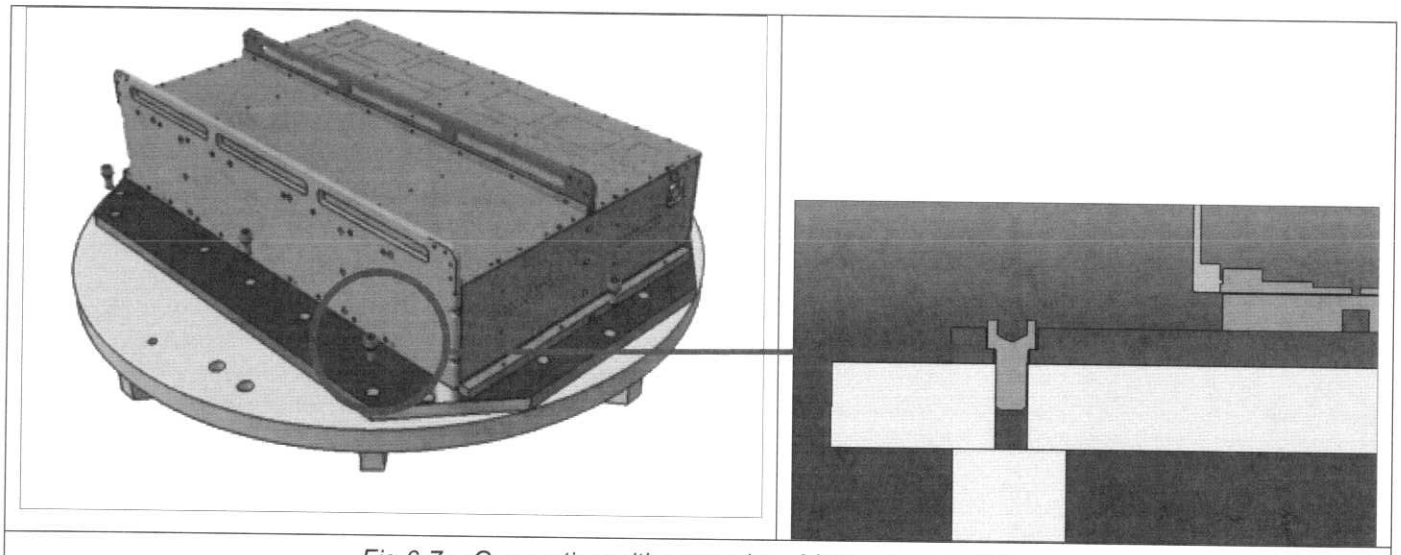

Fig 6-7 – Connection with expander - M12 screws position

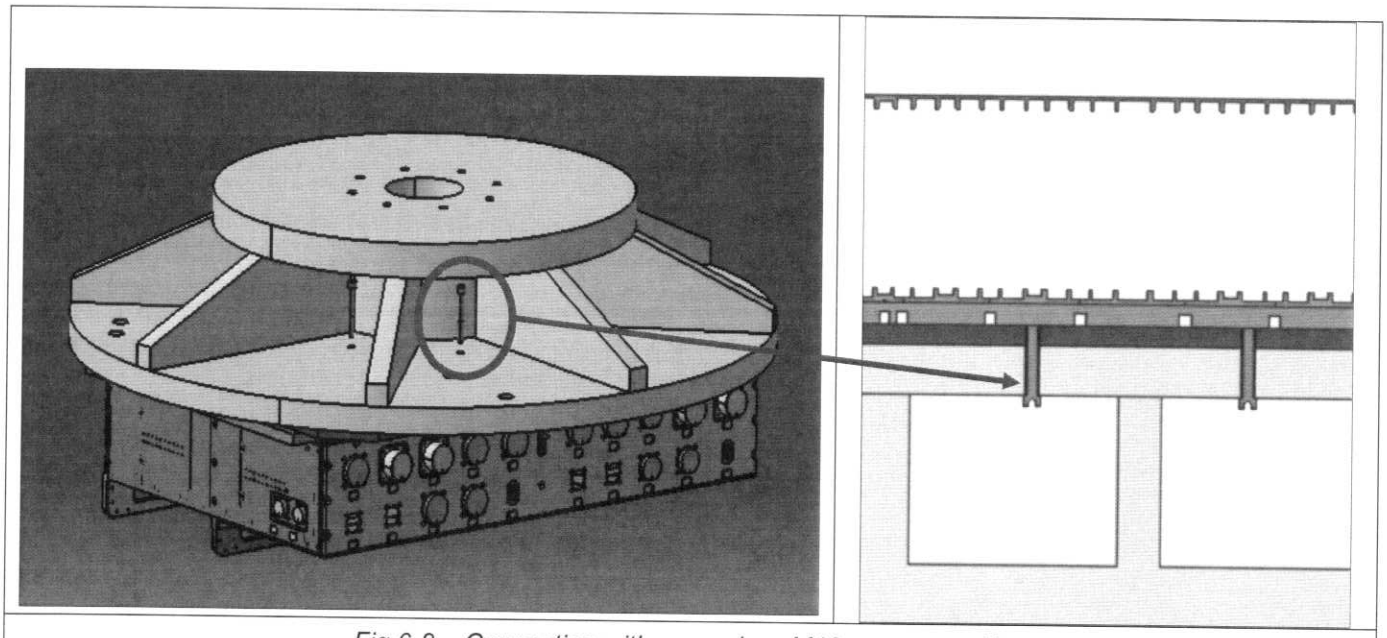

Fig 6-8 – Connection with expander - M10 screws position

Questo documento contiene informazioni di proprietà di CARLO GAVAZZI SPACE SpA: Tutti i diritti sono riservati
All information contained in this document are property of CARLO GAVAZZI SPACE SpA. All right reserved.

6.4 CONNECTION TO THE SLIDING TABLE

In order to fix the PDS (with IF plate and fixture) to the sliding table, an adaptation plate is needed between the fixture and the sliding table: the adaptation plate shall be connected to the slip table by 16 M10x25 ISO4762 socket head screws (furnished by the facility) as shown in the following figure.

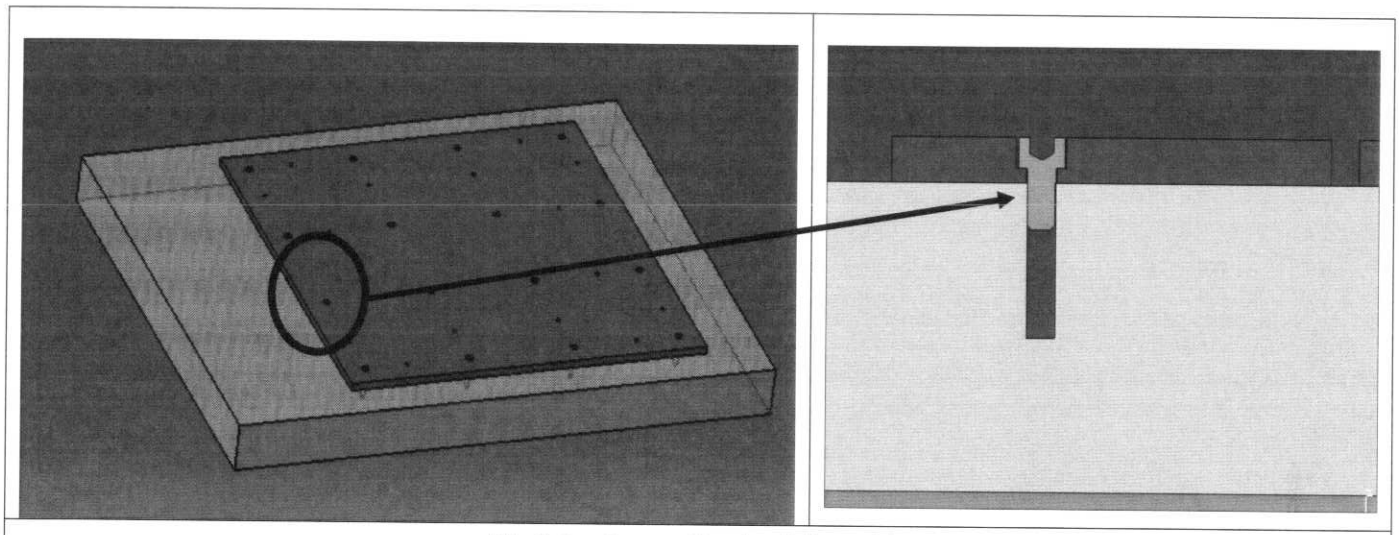

Fig 6-9 – Connection to sliding table

The connection between the fixture and the adaptation plate is provided by N12 M12x20 ISO4762 socket head screws (furnished by the facility).

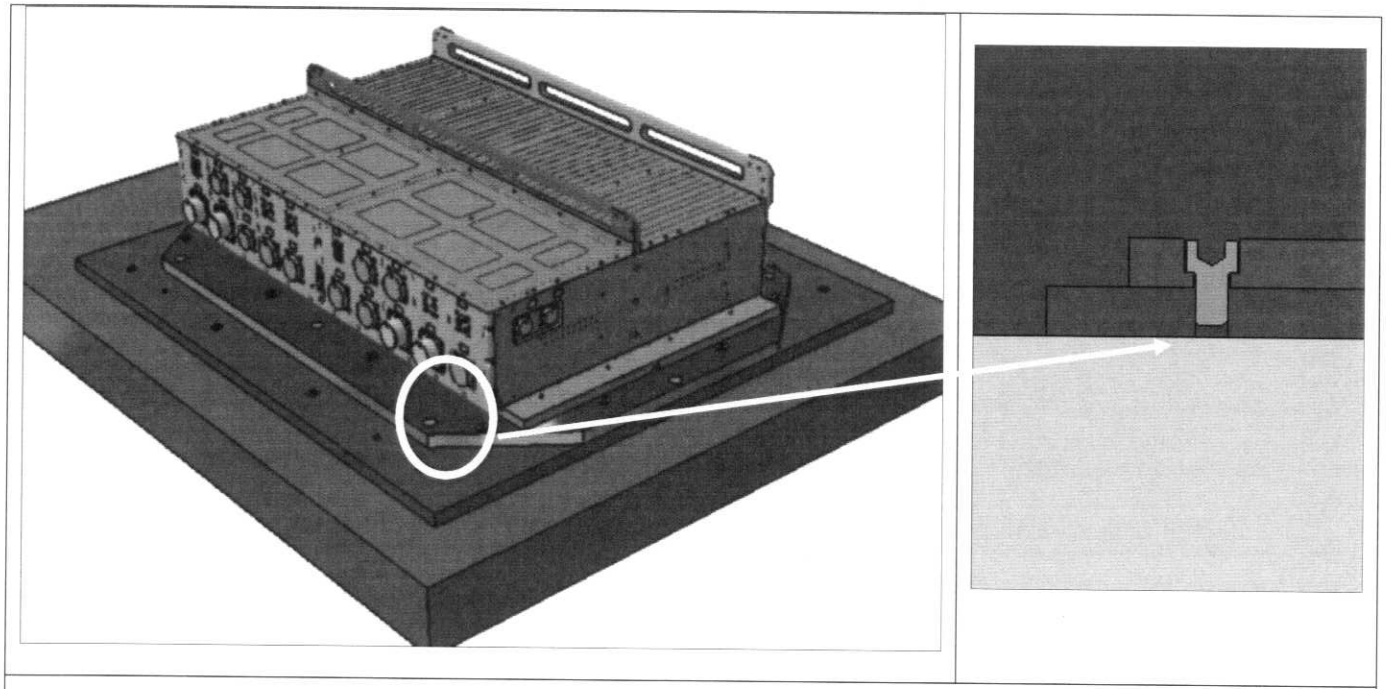

Fig 6-10 – Connection to adaptation table

Questo documento contiene informazioni di proprietà di CARLO GAVAZZI SPACE SpA: Tutti i diritti sono riservati
All information contained in this document are property of CARLO GAVAZZI SPACE SpA. All right reserved.

6.5 ACCELEROMETER CHARACTERISTICS

The accelerometer characteristics shall be annexed to the test data report.

7. TEST CONDITIONS

The UUT shall be mounted on the vibrator exciter by bolting it onto a rigid fixture in launch configuration.

The transmissibility characteristic of the rigid fixture will guarantee that the input vibration levels are transmitted from the exciter to the unit without relevant amplification/degradation.

The UUT shall be powered OFF for all the test duration.

Unless otherwise specified, all the measurements are to be performed at the following ambient conditions:

Temperature:	20°C ±5°C
Relative humidity:	60% ±20% RH
Pressure:	Ambient
Cleanliness	Visibly clean

8. TEST RESPONSIBILITY

CGS is responsible for the application of all requirements stated in the applicable documents.

The technical responsibilities for testing and test results is of the Engineering department.
Project and test managers are responsible for the test program. The test engineer is responsible for the correct execution of the test program and for the fulfilment of the requirements, for measurement and recording and for the preparation of the test report.

QA is responsible for ensuring that all the agreed procedures are carefully observed, that test equipment and instrumentation used during testing are calibrated and within validity date, that the test results are recorded in the ADP (Acceptance Data Package) and signed by the operators and QA witness, that all non conforming condition and test results are properly documented and notified to the customer and that all requirements of applicable PA Plan, Specification and Statement Of Work pertaining to the tests, are fully satisfied.

Laboratories General disposition shall be applied to maximize personnel safety from potential hazards.

Questo documento contiene informazioni di proprietà di CARLO GAVAZZI SPACE SpA: Tutti i diritti sono riservati
All information contained in this document are property of CARLO GAVAZZI SPACE SpA. All right reserved.

9. SUCCESS CRITERIA

The vibration tests shall be performed in the following way (for each axis):

Activity	*SUCCESS CRITERIA*	*REQUIREMENT*
Fixture calibration (Loaded and Unloaded)	The transmissibility characteristic of the rigid fixture will guarantee that the input vibration levels are transmitted from the exciter to the unit without relevant amplification/degradation (less than 3dB between 5 and 500 Hz and ± 6 dB between 500 and 2000 dB). Provided that the cumulative bandwidth that exceeds ± 3 dB, does not exceed 300 Hz . Cross talks shall not exceed the input	None
Resonance search before sine and random vibration	No resonance below specified values (50 Hz)	13.2 from AD4
Full level random vibration	No resonance below specified values (50 Hz) No structural yielding or failure No performance degradation*	4.2.2 from AD2
Resonance search after sine and random vibration	No resonance below specified values (50 Hz) No relevant differences with respect to the previously recorded sine resonance search data	13.2 from AD4
Functional tests*	Non discrepancies on the unit performance	

* Functional tests performed Before and after overall test session

Tab 9-1 - PDS test success criteria

10. OPERATIONAL RESTRICTIONS

Connectors savers shall be removed (if present) before the test .

All used instruments shall meet the necessary accuracy and shall not degrade the UUT performance.

Unit shall be handled with lattice gloves.

Questo documento contiene informazioni di proprietà di CARLO GAVAZZI SPACE SpA: Tutti i diritti sono riservati
All information contained in this document are property of CARLO GAVAZZI SPACE SpA. All right reserved.

11. NOTCHING

To avoid the overstressing of the flight unit notching of MWL is allowed In order to avoid artificial high resonant loads in flight hardware according to the following guidelines:

- Notching shall be implemented so that the maximum gRMS measured on the accelerometers mounted on the PDS external walls shall not exceed 6.8 gRMS (±10%) in the excitation direction.
- The notched input spectrum shall not fall below the MEFL in any frequency range.
- In case that at MEFL vibration spectrum the accelerometer responses on the unit exceed 6.8gRMS (±10%), the unit will be tested at the MEFL here reported.

X Axis	20-58 Hz	0.0025 g^2/Hz
	58-125 Hz	+9 dB/Octave
	125-300 Hz	0.025 g^2/Hz
	300-900 Hz	-9 dB/Octave
	900-2000 Hz	0.001 g^2/Hz
	Overall = 3.1 Grms	
Y Axis	20-90 Hz	0.008 g^2/Hz
	90-100 Hz	+9 dB/Octave
	100-300 Hz	0.01 g^2/Hz
	300-650 Hz	-9 dB/Octave
	650-2000 Hz	0.001 g^2/Hz
	Overall = 2.3 Grms	
Z Axis	20-45 Hz	0.009 g^2/Hz
	45-125 Hz	+3 dB/Octave
	125-300 Hz	0.025 g^2/Hz
	300-900 Hz	-9 dB/Octave
	900-2000 Hz	0.001 g^2/Hz
	Overall = 3.2 Grms	

Note: MEFL Test duration: 60 seconds per axis

Tab 11-1 - Maximum Expected Flight Level

Questo documento contiene informazioni di proprietà di CARLO GAVAZZI SPACE SpA: Tutti i diritti sono riservati
All information contained in this document are property of CARLO GAVAZZI SPACE SpA. All right reserved.

12. PARTICIPANTS REQUIRED

12.1 GENERAL

All tests shall be performed under QA surveillance in accordance with and following detailed procedure of CGS PA Plan.

Skilled personnel shall be employed.

The test shall be notified to the Customer as applicable.

12.2 QA WITNESS OF TESTS AND SIGN-OFF

QA inspector , or its delegate, shall witness all tests described in this procedure and shall sign the test data sheet.

13. NON-CONFORMANCE AND FAILURES

Any malfunction occurred during the tests shall be processed according to the Non-Conformance Procedure.

14. CALIBRATION REQUIREMENTS

All instruments used for testing shall be calibrated.
Evidence of certification shall be provided by a label attached to the instruments itself, showing the calibration date, the expire date and the signature of the operator.

Questo documento contiene informazioni di proprietà di CARLO GAVAZZI SPACE SpA: Tutti i diritti sono riservati
All information contained in this document are property of CARLO GAVAZZI SPACE SpA. All right reserved.

N.	EQUIPMENT	MANUFACTURER	P/N	S/N	ACCURACY	NEXT CAL. DATE	REMARKS
	See Annex C						

Questo documento contiene informazioni di proprietà di CARLO GAVAZZI SPACE SpA: Tutti i diritti sono riservati
All information contained in this document are property of CARLO GAVAZZI SPACE SpA. All right reserved.

15. MEASUREMENT ACCURACY

Test parameter tolerances shall be as follows:

Sinusoidal vibration	
Frequency	±2 % from 10 Hz to 2000 Hz
Amplitude	±10 %
Sweep rate	±5 %
Random vibration	
Frequency	±5 % (or 1 Hz whichever is greater)
PSD from 20 Hz to 500 Hz (filter bandwidth 25 Hz or less)	-1/ +3 dB for Qualification and
PSD from 500 Hz to 2000 Hz (filter bandwidth 50 Hz or less)	-3/+1.5 dB for Acceptance
Random overall g r.m.s.	±10 %
Test time	0/+10 %

The accuracy of the instrumentation shall be consistent with the tolerance for the variable to be measured as above specified and should be at least one third of the tolerances itself.

16. GENERAL PROCEDURE

16.1 QUALIFICATION TEST LEVELS

In the next pages the complete test sequence to be followed during the test is reported.
It shall be properly filled during test performance and form part - in addition to test results and analysis - of the relevant test report.

16.1.1 RESONANCE SEARCH TEST LEVEL

The program for the shaker is explained in the following operations:

- Linear Frequency Scan
- Band: 10-2000 HZ
- Scan Speed 2 oct/min (Sweep Up Only)
- Level 0.5 g (Peak)

Questo documento contiene informazioni di proprietà di CARLO GAVAZZI SPACE SpA. Tutti i diritti sono riservati.
All information contained in this document are property of CARLO GAVAZZI SPACE SpA. All right reserved.

16.1.2 RANDOM VIBRATION TEST LEVEL

For all direction the following MWL random vibration level shall be used for proto-qualification of the PDS according to AMS Structural Verification Plan (see AD[4])

All Axes	20 Hz	0.01 g^2/Hz
	20-80 Hz	+3 dB/Octave
	80-500 Hz	0.04 g^2/Hz
	500-2000 Hz	-3 dB/Octave
	2000 Hz	0.01 g^2/Hz
	Overall = 6.8 Grms	

Note: MWL Test duration: 60 seconds per axis

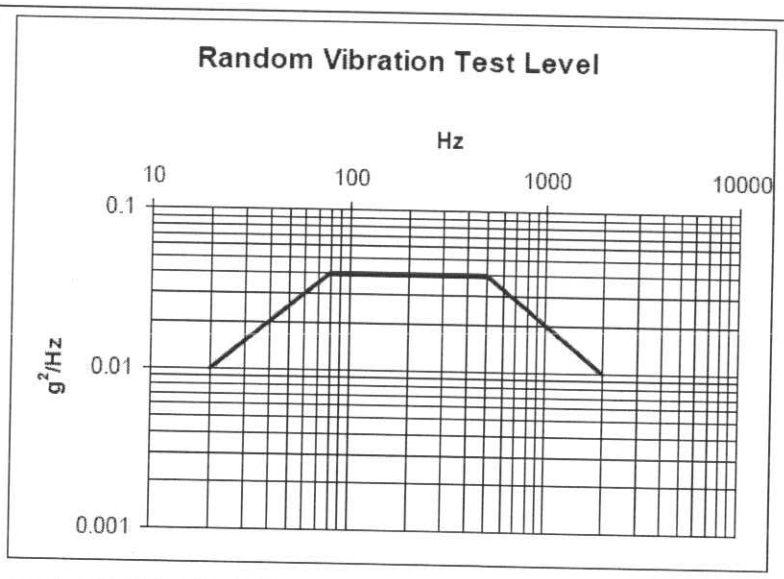

Tab 16-1 – MWL Random vibration test level for the 3 axes

LOW Level is obtained reducing the MWL of -12 dB (which means a factor of 16 on PSD values and a factor of 4 on gRMS Value)

f	PSD [g^2/Hz]
20	6.310E-04
80	2.524E-03
500	2.524E-03
2000	6.310E-04

Low Level Test Duration 30 seconds per axis

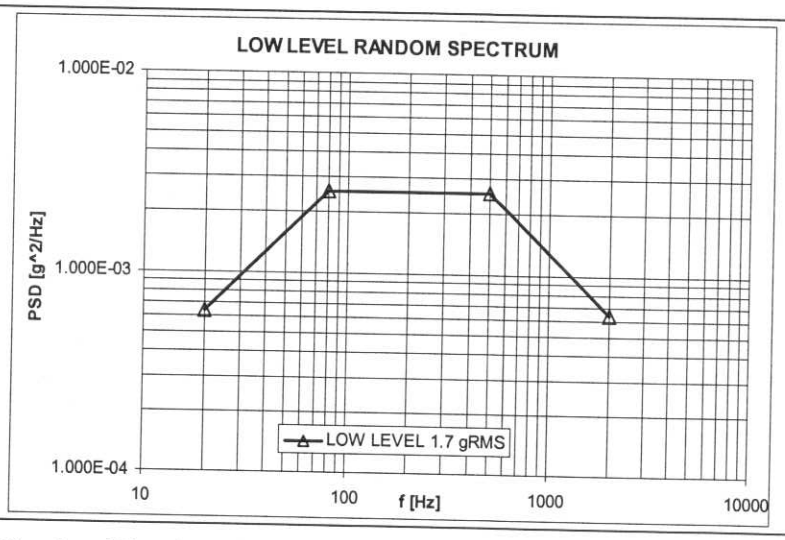

Tab 16-2 – Low Random Vibration Level for 3 axes

Questo documento contiene informazioni di proprietà di CARLO GAVAZZI SPACE SpA. Tutti i diritti sono riservati.
All information contained in this document are property of CARLO GAVAZZI SPACE SpA. All right reserved.

17. PDS ACCELEROMETER DISPOSITION

The accelerometers shall be placed using proper mounting adapters and means of mounting (adhesive strips or glue) able to guarantee an accurate measurement in the range 5-2000 Hz.
The accelerometers of the UUT hardware shall be placed using proper mounting adapters and means of mounting (adhesive strips or glue) without causing surface treatment\parts damage or modification. Any modification of the UUT for accelerometers placement must be previously agreed with the UUT responsible\s.
The following figure shows the accelerometer disposition on the UUT.

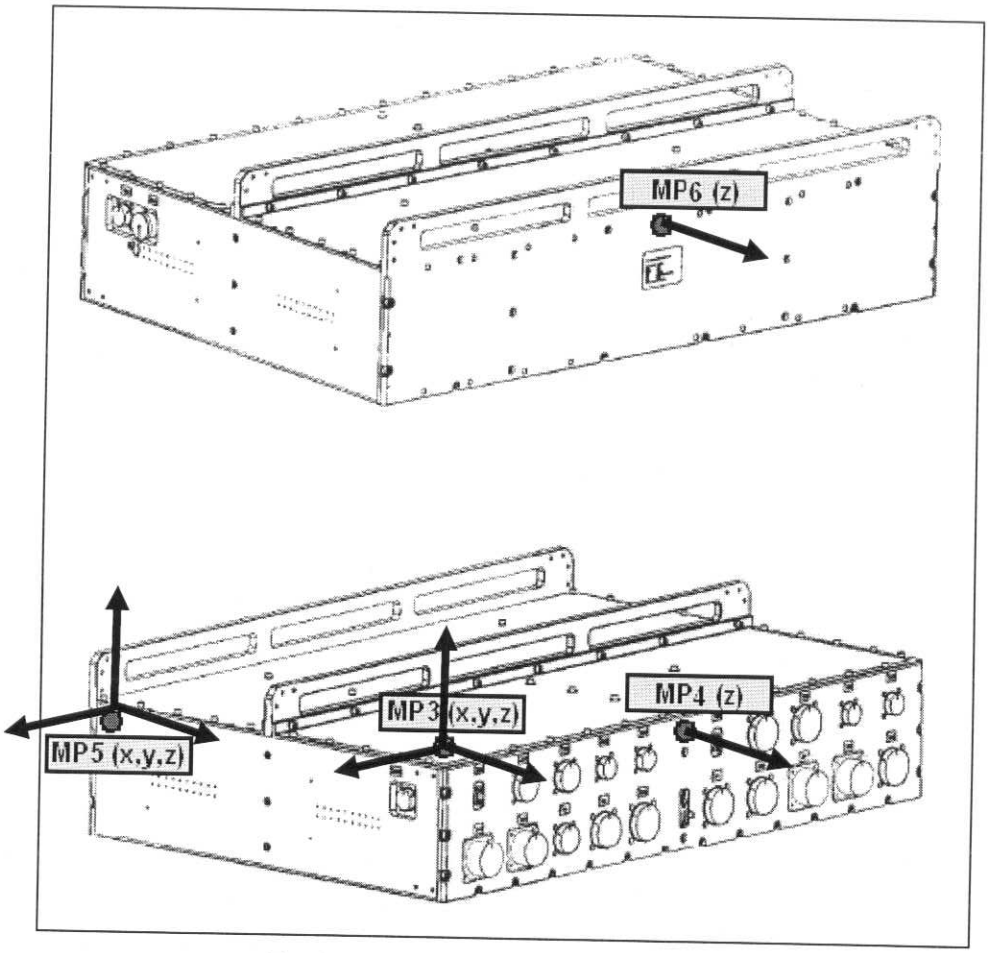

Fig 17-1 - PDS accelerometer disposition

Questo documento contiene informazioni di proprietà di CARLO GAVAZZI SPACE SpA. Tutti i diritti sono riservati.
All information contained in this document are property of CARLO GAVAZZI SPACE SpA. All right reserved.

17.1 INSTRUMENTATION PLAN – X AXIS

17.1.1 FIXTURE CALIBRATION UNLOADED – X AXIS

Instrumentation for Fixture Calibration (Unloaded) - X axis					
CP/MP ID	SENSITIVITY AXIS			Position	REMARKS
	X	Y	Z		
CP1	1			Fixture	
CP2	1			Fixture	
MP1	1	1		Adapting Plate	
MP2	1	1		Fixture	
TOTAL	**4**	**2**		**6**	

CP = Control Point
MP = Measure Point

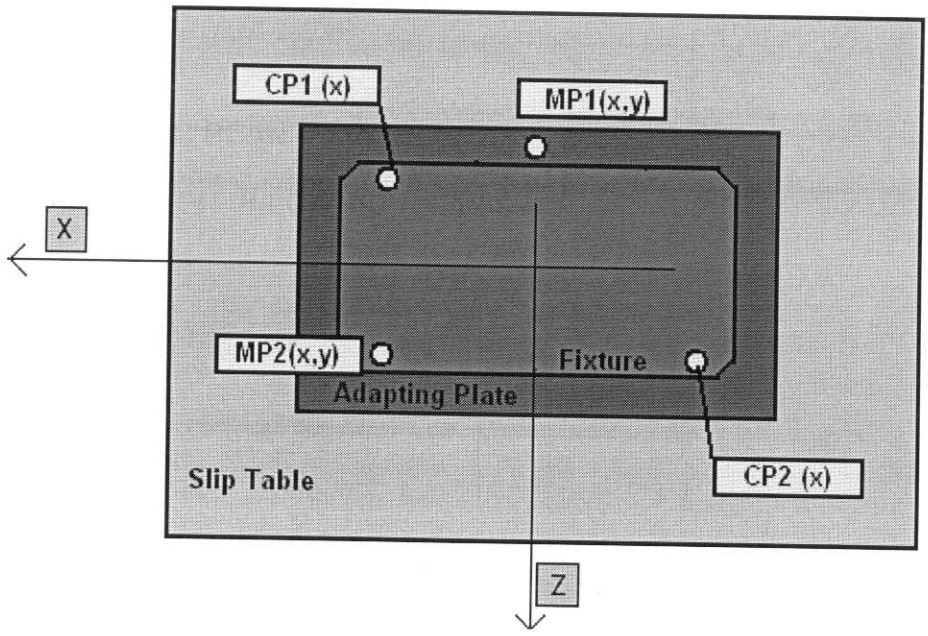

Tab 17-1- Instrumentation for Fixture Calibration (Unloaded) - X axis

Questo documento contiene informazioni di proprietà di CARLO GAVAZZI SPACE SpA. Tutti i diritti sono riservati.
All information contained in this document are property of CARLO GAVAZZI SPACE SpA. All right reserved.

17.1.2 FIXTURE CALIBRATION LOADED – X AXIS

Instrumentation for Fixture Calibration (Loaded) - X axis					
CP/MP ID	SENSITIVITY AXIS			Position	REMARKS
	X	Y	Z		
CP1	1			Fixture	
CP2	1			Fixture	
MP1	1	1		Adapting Plate	
MP2	1	1		Fixture	
TOTAL	**4**	**2**		**6**	

CP = Control Point
MP = Measure Point

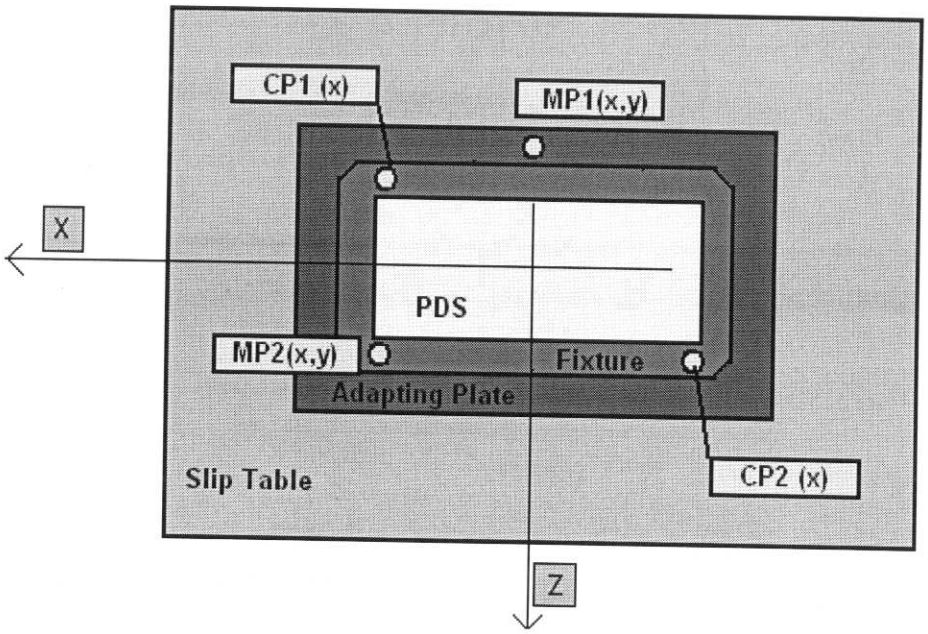

Tab 17-2- Instrumentation for Fixture Calibration (Loaded) - X axis

Questo documento contiene informazioni di proprietà di CARLO GAVAZZI SPACE SpA. Tutti i diritti sono riservati.
All information contained in this document are property of CARLO GAVAZZI SPACE SpA. All right reserved.

17.1.3 UNIT RESONANCE SEARCH AND RANDOM VIBRATION TEST – X AXIS

Instrumentation for Unit Resonance Search and Random Vibration Test - X axis					
CP/MP ID	SENSITIVITY AXIS			Position	REMARKS
	X	Y	Z		
CP1	1			Fixture	
CP2	1			Fixture	
MP1	1	1		Adapting Plate	
MP2	1	1		Fixture	
MP3	1	1	1	PDS Top Cover Rear Panel	See Fig 17-1
MP4			1	PDS Rear Panel	See Fig 17-1
MP5	1	1	1	PDS Right Panel	See Fig 17-1
MP6			1	PDS Front Panel	See Fig 17-1
TOTAL	**6**	**4**	**4**	**14**	

CP = Control Point
MP = Measure Point

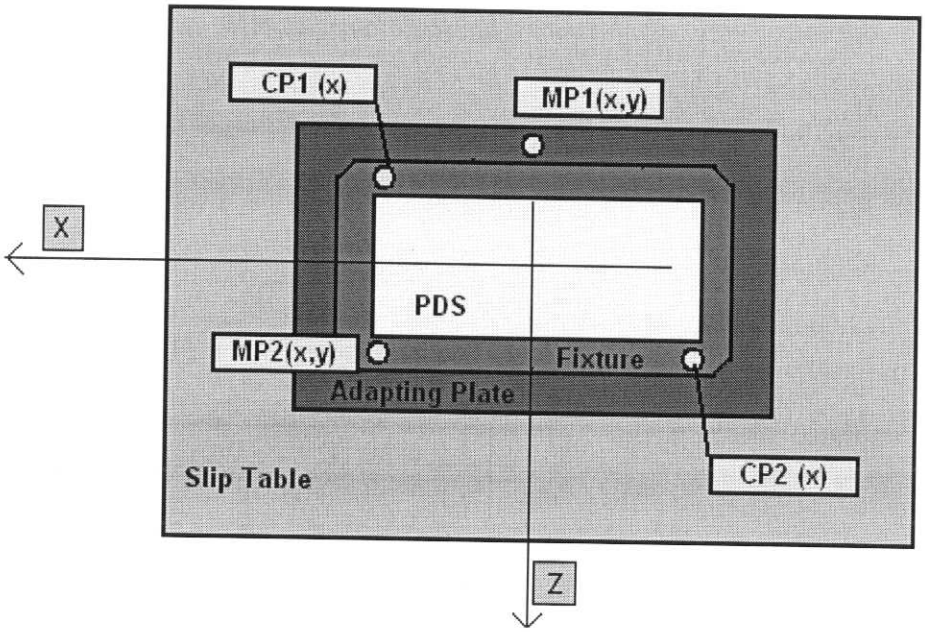

Tab 17-3- Instrumentation for Resonance Search and Random Vibration Test - X axis

Questo documento contiene informazioni di proprietà di CARLO GAVAZZI SPACE SpA. Tutti i diritti sono riservati.
All information contained in this document are property of CARLO GAVAZZI SPACE SpA. All right reserved.

17.2 INSTRUMENTATION PLAN – Y AXIS

17.2.1 FIXTURE CALIBRATION UNLOADED – Y AXIS

Instrumentation for Fixture Calibration (Unloaded) - X axis					
CP/MP ID	SENSITIVITY AXIS			Position	REMARKS
	X	Y	Z		
CP1		1		Fixture	
CP2		1		Fixture	
MP1	1	1	1	Head Expander	
MP2	1	1	1	Fixture	
TOTAL	**2**	**4**	**2**	**8**	

CP = Control Point
MP = Measure Point

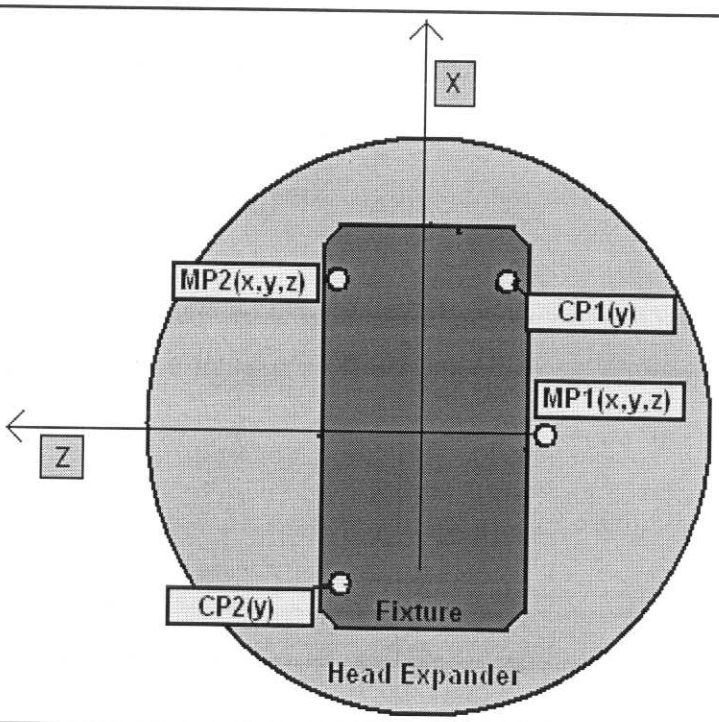

Tab 17-4- Instrumentation for Fixture Calibration (Unloaded) - Y axis

Questo documento contiene informazioni di proprietà di CARLO GAVAZZI SPACE SpA. Tutti i diritti sono riservati.
All information contained in this document are property of CARLO GAVAZZI SPACE SpA. All right reserved.

17.2.2 FIXTURE CALIBRATION LOADED – Y AXIS

Instrumentation for Fixture Calibration (Loaded) - Y axis					
CP/MP ID	SENSITIVITY AXIS			Position	REMARKS
	X	Y	Z		
CP1		1		Fixture	
CP2		1		Fixture	
MP1	1	1	1	Head Expander	
MP2	1	1	1	Fixture	
TOTAL	**2**	**4**	**2**	**8**	

CP = Control Point
MP = Measure Point

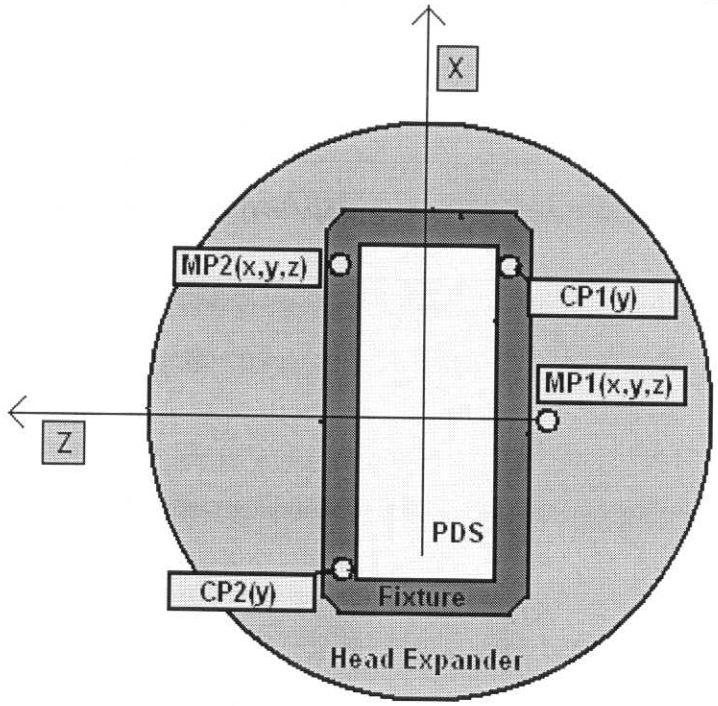

Tab 17-5- Instrumentation for Fixture Calibration (Loaded) - Y axis

Questo documento contiene informazioni di proprietà di CARLO GAVAZZI SPACE SpA. Tutti i diritti sono riservati.
All information contained in this document are property of CARLO GAVAZZI SPACE SpA. All right reserved.

17.2.3 UNIT RESONANCE SEARCH AND RANDOM VIBRATION TEST – Y AXIS

Instrumentation for Unit Resonance Search and Random Vibration Test - Y axis					
CP/MP ID	SENSITIVITY AXIS			Position	REMARKS
	X	Y	Z		
CP1		1		Fixture	
CP2		1		Fixture	
MP1	1	1	1	Adapting Plate	
MP2	1	1	1	Fixture	
MP3	1	1	1	PDS Top Cover Rear Panel	See Fig 17-1
MP4			1	PDS Rear Panel	See Fig 17-1
MP5	1	1	1	PDS Right Panel	See Fig 17-1
MP6			1	PDS Front Panel	See Fig 17-1
TOTAL	**4**	**6**	**6**	**16**	

CP = Control Point
MP = Measure Point

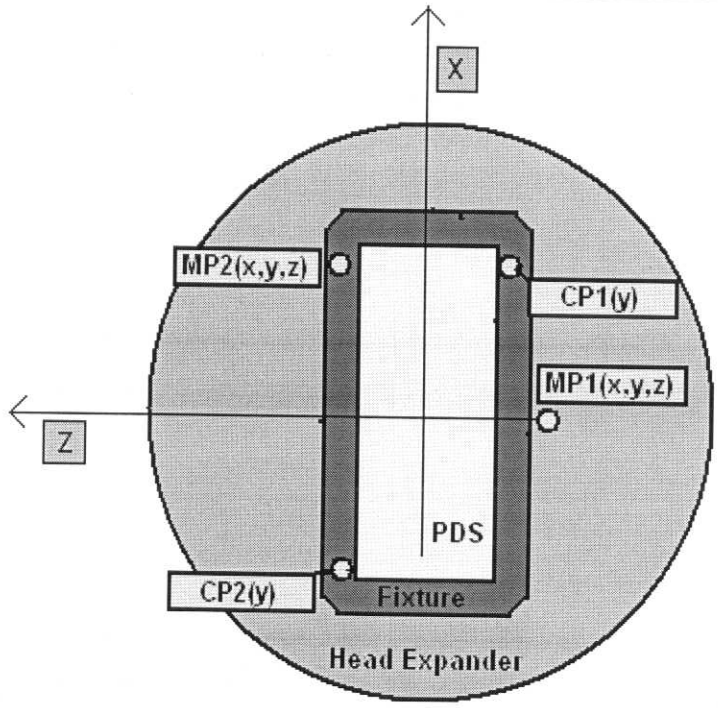

Tab 17-6- Instrumentation for Resonance Search and Random Vibration Test - Y axis

Questo documento contiene informazioni di proprietà di CARLO GAVAZZI SPACE SpA. Tutti i diritti sono riservati.
All information contained in this document are property of CARLO GAVAZZI SPACE SpA. All right reserved.

17.3 INSTRUMENTATION PLAN – Z AXIS

17.3.1 FIXTURE CALIBRATION UNLOADED – Z AXIS

Instrumentation for Fixture Calibration (Unloaded) - Z axis					
CP/MP ID	SENSITIVITY AXIS			Position	REMARKS
	X	Y	Z		
CP1			1	Fixture	
CP2			1	Fixture	
MP1		1	1	Adapting Plate	
MP2		1	1	Fixture	
TOTAL		**2**	**4**	**6**	

CP = Control Point
MP = Measure Point

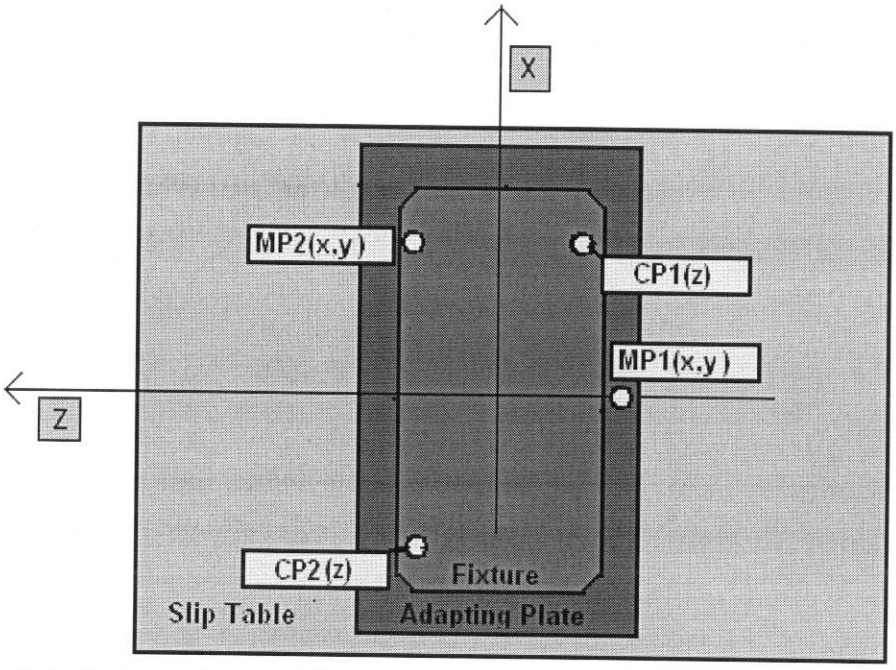

Tab 17-7- Instrumentation for Fixture Calibration (Unloaded) - Z axis

Questo documento contiene informazioni di proprietà di CARLO GAVAZZI SPACE SpA. Tutti i diritti sono riservati.
All information contained in this document are property of CARLO GAVAZZI SPACE SpA. All right reserved.

17.3.2 FIXTURE CALIBRATION LOADED – Z AXIS

Instrumentation for Fixture Calibration (Loaded) - Z axis					
CP/MP ID	SENSITIVITY AXIS			Position	REMARKS
	X	Y	Z		
CP1			1	Fixture	
CP2			1	Fixture	
MP1		1	1	Adapting Plate	
MP2		1	1	Fixture	
TOTAL		**2**	**4**	**6**	

CP = Control Point
MP = Measure Point

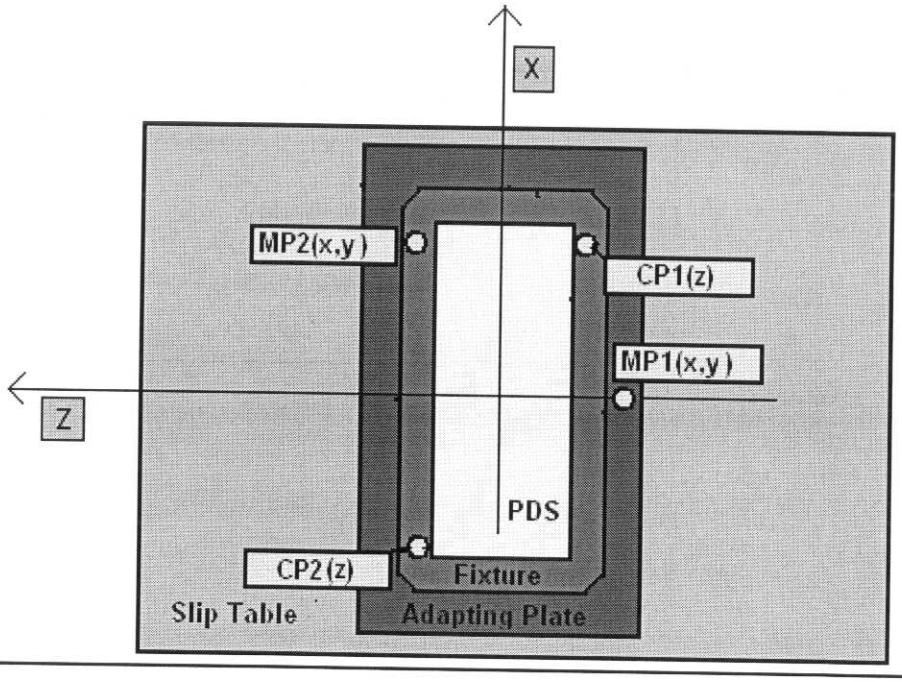

Tab 17-8- Instrumentation for Fixture Calibration (Loaded) - Z axis

Questo documento contiene informazioni di proprietà di CARLO GAVAZZI SPACE SpA. Tutti i diritti sono riservati.
All information contained in this document are property of CARLO GAVAZZI SPACE SpA. All right reserved.

17.3.3 UNIT RESONANCE SEARCH AND RANDOM VIBRATION TEST – Z AXIS

Instrumentation for Unit Resonance Search and Random Vibration Test - Z axis					
CP/MP ID	SENSITIVITY AXIS			Position	REMARKS
	X	Y	Z		
CP1			1	Fixture	
CP2			1	Fixture	
MP1		1	1	Adapting Plate	
MP2		1	1	Fixture	
MP3	1	1	1	PDS Top Cover Rear Panel	See Fig 17-1
MP4			1	PDS Rear Panel	See Fig 17-1
MP5	1	1	1	PDS Right Panel	See Fig 17-1
MP6			1	PDS Front Panel	See Fig 17-1
TOTAL	**2**	**4**	**8**	**14**	

CP = Control Point
MP = Measure Point

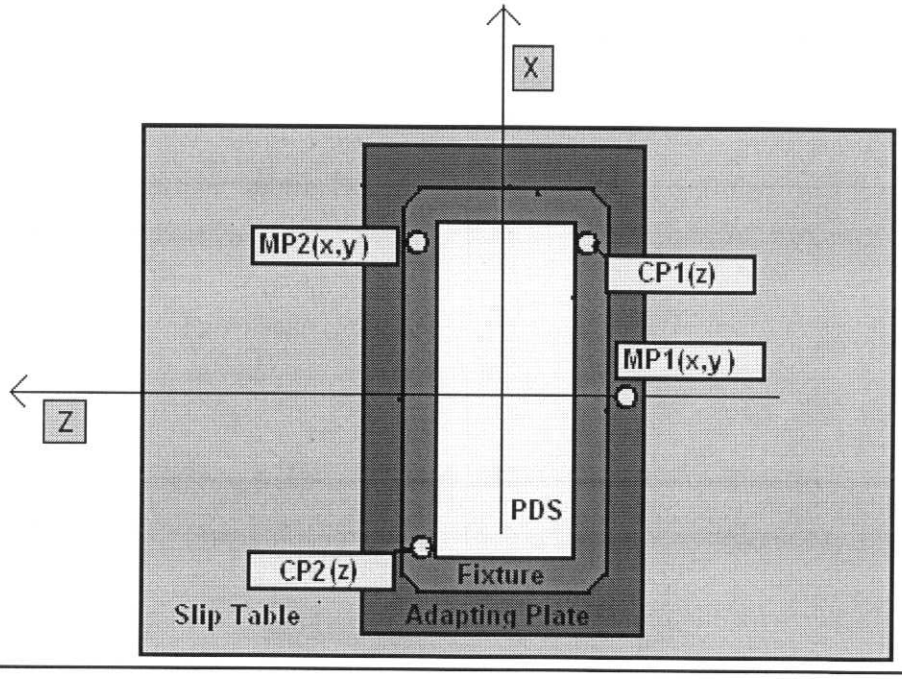

Tab 17-9- Instrumentation for Resonance Search and Random Vibration Test - Z axis

Questo documento contiene informazioni di proprietà di CARLO GAVAZZI SPACE SpA. Tutti i diritti sono riservati.
All information contained in this document are property of CARLO GAVAZZI SPACE SpA. All right reserved.

18. CONCLUSIONS

The vibration test campaign of the AMS02-PDS PFM Unit for the vibration environment according to AD2 and AD4 has been successfully completed.
The unit under test showed the specified performance under applicable mechanical environment and I/F conditions.

The first fundamental resonance frequency of the AMS02-PDS PFM Unit is higher than 50 Hz

The AMS02-PDS PFM sustained the random vibration loads with no structural yielding or failures, verified by visual inspection and RS plots comparison.

Questo documento contiene informazioni di proprietà di CARLO GAVAZZI SPACE SpA. Tutti i diritti sono riservati.
All information contained in this document are property of CARLO GAVAZZI SPACE SpA. All right reserved.