ORIGINALE ARCHIVIO

CARLO GAVAZZI

CARLO GAVAZZI SPACE SpA

AMS02-PDS

Tipo Doc.: *Doc.Type:*	TECHNICAL NOTE			N° DRD: *DRD N°:*	DEL 091
N° Doc.: *Doc. N°:*	**PDS-TN-CGS-010**	Ediz.: *Issue:* **1**	Data: *Date:* **25/03/08**	Pagina *Page* **1**	Di *Of* **85**
Titolo : *Title :*	PDS FM STRUCTURAL ANALYSIS				

	Nome & Funzione *Name & Function*	Firma *Signature*	Data *Date*
Preparato da: *Prepared by:*	Zavattini L. (DT/MT)		25/03/08
Approvato da: *Approved by:*	Duò F. (DT/MT)		25/03/08
	Alia S. (SYS)		25-3-08
	Francini E. (PA/QA)		25/03/08
	Cinquepalmi C. (PA/CC)		25/03/08
Applicazione autorizzata da: *Application authorized by:*	Olivier M. (PM)		25/03/08

Customer / Higher Level Contractor

Accettato da: *Accepted by:*			
Approvato da: *Approved by:*			

LISTA DI DISTRIBUZIONE *DISTRIBUTION LIST*	N	A	I
Interna / *Internal*			
Duò F. (DT/MT)	1	X	
Alia S. (SYS)	1	X	
Francini E. (PA/QA)	1		X
Olivier M. (PM)	1	X	
Esterna / *External*			
Russo E. (ASI)	1		X

N=Numero di copie A=Applicazione I=Informazione
N=Number of copy A=Application I=Information

Gestione documenti: *Data Management:* Firma / *Signature* 25/03/08 Data / *Date*

File: PDS-TN-CGS-010-IS1.doc

Questo documento contiene informazioni di proprietà di CARLO GAVAZZI SPACE SpA: Tutti i diritti sono riservati
All information contained in this document are property of CARLO GAVAZZI SPACE SpA. All right reserved.

REGISTRAZIONE DELLE MODIFICHE / *CHANGE RECORD*

EDIZIONE *ISSUE*	DATA *DATE*	AUTORIZZAZIONE *CHANGE AUTHORITY*	OGGETTO DELLA MODIFICA E SEZIONI AFFETTE *REASON FOR CHANGE AND AFFECTED SECTIONS*
1	25/03/08		First emission

Questo documento contiene informazioni di proprietà di CARLO GAVAZZI SPACE SpA. Tutti i diritti sono riservati.
All information contained in this document are property of CARLO GAVAZZI SPACE SpA. All right reserved.

LISTA DELLE PAGINE VALIDE / *LIST OF VALID PAGES*

PAGINA *PAGE*	EDIZIONE *ISSUE*	PAGINA *PAGE*	EDIZIONE *ISSUE*	PAGINA *PAGE*	EDIZIONE *ISSUE*	PAGINA *PAGE*	EDIZIONE *ISSUE*	PAGINA *PAGE*	EDIZIONE *ISSUE*
1 - 85	1								

Questo documento contiene informazioni di proprietà di CARLO GAVAZZI SPACE SpA. Tutti i diritti sono riservati.
All information contained in this document are property of CARLO GAVAZZI SPACE SpA. All right reserved.

TABLE OF CONTENT

LIST OF TABLES 6
LIST OF FIGURES 7
LIST OF ACRONYMS 8

1. INTRODUCTION 9

1.1 SCOPE OF THE DOCUMENT 9

2. RELEVANT DOCUMENTS 10

2.1 APPLICABLE DOCUMENTS 10
2.2 REFERENCE DOCUMENTS 10

3. PDS POSITION 11

4. PDS CONFIGURATIONS 12

5. PDS STRUCTURAL VERIFICATION ITEM LIST 13

6. MODEL DESCRIPTION 14

6.1 USED SOFTWARE 14
6.2 MODEL UNITS 14
6.3 MODEL COORDINATE SYSTEM 15
6.4 MODEL MATERIALS 17
6.4.1 AL 7075 T7351 17
6.4.2 POLYIMIDE 18
6.4.3 COPPER 19
6.4.4 PEEK 20
6.4.5 DUMMY STEEL 21
6.5 FE MODEL DESCRIPTION 21
6.5.1 MAIN STRUCTURE 22
6.5.2 INTERNAL FRAMES AND SUPPORTS 23
6.5.3 ELECTRONIC COMPONENTS 24
6.6 MODEL BOUNDARY CONDITIONS 25
6.7 MODEL MASS BUDGET 26
6.8 MODEL CHECK 27
6.8.1 PDS TEST CONFIGURATION MODEL SIZE AND GEOMETRY 27
6.8.2 FREE-FREE AND HARDMOUNTED MODES 28
6.8.3 1 G CHECK 29
6.8.4 STRAIN ENERGY CHECK 30

7. DIMENSIONING LOADS 31

7.1 TEST LOADS 31
7.2 FLIGHT LOADS 33
7.2.1 INERTIAL LOADS AND ENFORCED DISPLACEMENT 33
7.2.2 ACOUSTIC LOADS 34
7.2.2.1 CALCULATION OF THE ACOUSTIC LOADS FOR WAKE RADIATOR 34
7.2.3 LOAD CASES SUMMARY 35

8. DIMENSIONING RULES 36

8.1 SAFETY FACTORS 36
8.2 TEMPERATURE DERATING FACTOR 36
8.3 MARGINS OF SAFETY FOR STRUCTURE 36
8.4 FAIL SAFE 36

9. DYNAMIC ANALYSIS (TEST CONFIGURATION) 37

9.1 EIGENFREQUENCIES AND MODE SHAPES 37

Questo documento contiene informazioni di proprietà di CARLO GAVAZZI SPACE SpA. Tutti i diritti sono riservati.
All information contained in this document are property of CARLO GAVAZZI SPACE SpA. All right reserved.

9.2 EFFECTIVE MASSES 41

10. STATIC ANALYSIS 42

10.1 TEST CONFIGURATION 42
10.1.1 DISPLACEMENT ANALYSIS IN TEST CONFIGURATION 42
10.1.2 STRESS ANALYSIS IN TEST CONFIGURATION 42
10.1.2.1 STRUCTURE 43
10.1.2.1.1 SHELL MODELED ELEMENTS 43
10.1.2.1.2 BEAM MODELED ELEMENTS 44
10.1.2.2 ELECTRONICS 45
10.1.3 JOINT ANALYSIS IN TEST CONFIGURATION 46
10.1.3.1 JOINT 1 47
10.1.3.2 JOINT 2 50
10.1.3.3 JOINT 3 53
10.1.3.4 JOINT 4 56
10.1.3.5 JOINT 5 59
10.2 FLIGHT CONFIGURATION 60
10.2.1 DISPLACEMENT ANALYSIS IN FLIGHT CONFIGURATION 60
10.2.2 STRESS ANALYSIS IN FLIGHT CONFIGURATION 61
10.2.2.1 STRUCTURE 61
10.2.2.1.1 SHELL MODELED ELEMENTS 61
10.2.2.1.2 BEAM MODELED ELEMENTS 62
10.2.2.2 ELECTRONICS 63
10.2.3 JOINT ANALYSIS IN FLIGHT CONFIGURATION 64
10.2.3.1 JOINT 1 65
10.2.3.2 JOINT 2 67
10.2.3.3 JOINT 3 69
10.2.3.4 JOINT 4 71
10.2.3.5 JOINT 5 73
10.3 MARGINS OF SAFETY FOR STRESS ANALYSIS 75
10.3.1 MARGINS OF SAFETY IN TEST CONFIGURATION 75
10.3.2 MARGINS OF SAFETY IN FLIGHT CONFIGURATION 76
10.4 MOS SUMMARY FOR JOINTS ANALYSIS 77
10.4.1 MOS SUMMARY FOR JOINTS IN TEST CONFIGURATION 77
10.4.1.1 NOMINAL 77
10.4.1.2 FAIL SAFE 77
10.4.2 MOS SUMMARY FOR JOINTS IN FLIGHT CONFIGURATION 78
10.4.2.1 NOMINAL 78
10.4.2.2 FAIL SAFE 78

11. CONCLUSIONS AND COMMENTS 79

ANNEX A. BOLTS VERIFICATION EXAMPLE 80

ANNEX B. PSD TABLE FOR SAFETY REVIEW 83

Questo documento contiene informazioni di proprietà di CARLO GAVAZZI SPACE SpA. Tutti i diritti sono riservati.
All information contained in this document are property of CARLO GAVAZZI SPACE SpA. All right reserved.

LIST OF TABLES

Table 1-1 Compliance Matrix 9
Table 2-1 Applicable documents 10
Table 2-2 Reference documents 10
Table 5-1 Verified items 13
Table 5-2 Failure Modes verification explanation 13
Table 6-1 AL 7075 T7351 properties 17
Table 6-2 AL 7075 T7351 in FE model 17
Table 6-3 Polyimide properties 18
Table 6-4: Polyimide in FE model 18
Table 6-5 Copper properties 19
Table 6-6 Copper in FE model 19
Table 6-7 Peek properties 20
Table 6-8 Peek in FE model 20
Table 6-9: Model summary 21
Table 6-10: Model mass budget 26
Table 6-11: FEM Geometry Check 27
Table 6-12: FEM mass properties, free-free modes, hard mounted modes 28
Table 6-13: FEM 1g check 29
Table 6-14: FEM Strain Energy check 30
Table 7-1: MWL Random vibration test level 31
Table 7-2: Test Configuration loads 32
Table 7-3: Applied set of load cases 33
Table 7-4: Load case 1001 displacements 33
Table 7-5: Applied set of load cases 35
Table 8-1: Safety Factors for structure 36
Table 9-1: PDS natural frequencies 37
Table 10-1: Joint description 46
Table 10-2: MoS definition for bolt analysis 46
Table 10-3: Joint 1 nominal and fail safe analyses (test) 49
Table 10-4: Joint 2 nominal and fail safe analyses (test) 52
Table 10-5: Joint 3 nominal and fail safe analyses (test) 55
Table 10-6: Joint 4 nominal and fail safe analyses (test) 58
Table 10-7: Joint description 64
Table 10-8: Joint 1 nominal and fail safe analyses (flight) 66
Table 10-9: Joint 2 nominal and fail safe analyses (flight) 68
Table 10-10: Joint 3 nominal and fail safe analyses (flight) 70
Table 10-11: Joint 4 nominal and fail safe analyses (flight) 72
Table 10-12: Joint 5 nominal and fail safe analyses (flight) 74
Table 10-13: MOS summary for test configuration 75
Table 10-14: MOS summary for flight configuration 76
Table 10-15: MoS joint test nominal configuration 77
Table 10-16: MoS joint test fail safe configuration 77
Table 10-17: MoS joint flight nominal configuration 78
Table 10-18: MoS joint flight fail safe configuration 78
Table B-1: PSD table for safety review 83
Table B-2: Joint table for safety review, nominal configuration 84
Table B-3: Joint table for safety review, fail safe configuration 85

Questo documento contiene informazioni di proprietà di CARLO GAVAZZI SPACE SpA. Tutti i diritti sono riservati.
All information contained in this document are property of CARLO GAVAZZI SPACE SpA. All right reserved.

LIST OF FIGURES

Figure 3-1: View of PDS attached to WAKE 11
Figure 4-1: Test Configuration 12
Figure 4-2: Flight Configuration 12
Figure 6-1: General view of PDS 14
Figure 6-2: WAKE in AMS-02 coordinate system 15
Figure 6-3: PDS in AMS-02 coordinate system 16
Figure 6-4: AMS-02 coordinate system 16
Figure 6-5: Main structure 22
Figure 6-6: Internal frames 23
Figure 6-7: Motherboards and boards 24
Figure 6-8: Model boundary conditions (Test Configuration) 25
Figure 6-9: Model boundary conditions (Flight Configuration) 25
Figure 7-1: Random vibration test level 31
Figure 7-2: Definition of the acoustic area on WAKE Radiator 34
Figure 7-3: Acoustic loads for WAKE Radiator 35
Figure 9-1: Mode 1 at 86.8 Hz, local mode of the boards 37
Figure 9-2: Mode 23 at 129.6 Hz, local mode of the boards 38
Figure 9-3: Mode 84 at 223.7 Hz 38
Figure 9-4: Mode 87 at 243.8 Hz 39
Figure 9-5: Mode 219 at 417.4 Hz 39
Figure 9-6: Mode 257 at 497.9 Hz 40
Figure 9-7: Effective masses for all axes 41
Figure 9-8: Cumulative effective masses for all axes 41
Figure 10-1: Maximum displacement – Load case 2 42
Figure 10-2: Structure shell elements Von Mises stress, Load Case 9, Layer Z2 43
Figure 10-3: Structure beam elements Maximum Combined stress, Load Case 9 44
Figure 10-4: Electronics Von Mises stress, Load Case 11, Layer Z1 45
Figure 10-5: Joint 1 Interface joints 47
Figure 10-6: Joint 1 critical axial case (test) 48
Figure 10-7: Joint 1 critical shear case (test) 48
Figure 10-8: Joint 2 50
Figure 10-9: Joint 2 critical axial case (test) 51
Figure 10-10: Joint 2 critical shear case (test) 51
Figure 10-11: Joint 3 53
Figure 10-12: Joint 3 critical axial case (test) 54
Figure 10-13: Joint 3 critical shear case (test) 54
Figure 10-14: Joint 4 56
Figure 10-15: Joint 4 critical axial case (test) 57
Figure 10-16: Joint 4 critical shear case (test) 57
Figure 10-17: Joint 5 59
Figure 10-18: Maximum displacement – Load case 1032 60
Figure 10-19: Structure shell elements Von Mises stress, Load Case 2031, Layer Z1 61
Figure 10-20: Structure beam elements Maximum Combined stress, Load Case 2031 62
Figure 10-21: Electronics Von Mises stress, Load Case 1016, Layer Z2 63
Figure 10-22: Joint 1 critical axial case (flight) 65
Figure 10-23: Joint 1 critical shear case (flight) 65
Figure 10-24: Joint 2 critical axial case (flight) 67
Figure 10-25: Joint 2 critical shear case (flight) 67
Figure 10-26: Joint 3 critical axial case (flight) 69
Figure 10-27: Joint 3 critical shear case (flight) 69
Figure 10-28: Joint 4 critical axial case (flight) 71
Figure 10-29: Joint 4 critical shear case (flight) 71
Figure 10-30: Joint 5 critical axial case (flight) 73
Figure 10-31: Joint 5 critical shear case (flight) 73

Questo documento contiene informazioni di proprietà di CARLO GAVAZZI SPACE SpA. Tutti i diritti sono riservati.
All information contained in this document are property of CARLO GAVAZZI SPACE SpA. All right reserved.

LIST OF ACRONYMS

AD	APPLICABLE DOCUMENT
AMS	ALPHA MAGNETIC SPECTROMETER
CLA	COUPULED LOAD ANALYSIS
CoG	CENTER OF GRAVITY
DIR	DIRECTION
DoF	DEGREE of FREEDOM
FEM	FINITE ELEMENT MODEL
FL	FLANGE
LC	LOAD CASE
LMSO	LOCKHEED MARTIN SPACE OPERATION
MC	MAXIMUM COMBINED
MoS	MARGINS of SAFETY
NA	NOT AVAILABLE
NSM	NON STRUCTURAL MASS
PDS	POWER DISTRIBUTION SYSTEM
RD	REFERENCE DOCUMENT
RVLF	RANDOM VIBRATION LOAD FACTOR
SF	SAFETY FACTOR
SPC	SINGLE POINT CONSTRAIN
ULT	ULTIMATE
USS	UNIQUE SUPPORT STRUCTURE
VM	VON MISES

Questo documento contiene informazioni di proprietà di CARLO GAVAZZI SPACE SpA. Tutti i diritti sono riservati.
All information contained in this document are property of CARLO GAVAZZI SPACE SpA. All right reserved.

1. INTRODUCTION

1.1 SCOPE OF THE DOCUMENT

This document describes the models and methodologies employed to verify by analysis the structural requirements of the PDS assembly.
The document corresponds to contract deliverable DEL 091.

Two different configurations are considered for the analysis: Test and Flight Configurations (see Chapter 4):
The result of these analyses will demonstrate that PDS assembly is compliant with all structural requirements:

Requirement		Compliance	Rationale	Reference
Ref.	Expected value			
Chapter 4/5 of AD 1 **Limit Load Factors**	MoS > 0	Yes	MoS > 0	Chapter 7.2
Chapter 6 of AD 1 **Factor Of Safety**		Yes		Chapter 8.1
Chapter 7 of AD 1 **Margins Of Safety**		Yes		Chapter 8.3
Chapter 8 of AD 1 **Fracture and Fatigue**		Yes	Fail Safe Analysis performed with positive MoS; The PSD table for safety review is presented.	Chapters 8.4 10.4 and ANNEX B
Chapter 12 of AD 1 **Materials and Welds**		Yes	The materials used in the PDS are presented.	Chapters 6.4 8.2
Chapter 13 of AD 1 **Frequency Verification**	>50Hz	Yes	PDS analyzed like single unit shows 87Hz	Chapter 9 and RD 6
Chapter 14 of AD 1 **Strength Verification under installation on Wake Radiator**	All MoS positive	Yes	MoS > 0; minimum MoS=0.33	Chapters 10.3 10.4
Chapter 15 of AD 1 **Strength Verification under Environmental Testing**	All MoS positive	Yes	MoS > 0; minimum MoS=0.22	Chapters 10.3 10.4

Table 1-1 Compliance Matrix

Questo documento contiene informazioni di proprietà di CARLO GAVAZZI SPACE SpA. Tutti i diritti sono riservati.
All information contained in this document are property of CARLO GAVAZZI SPACE SpA. All right reserved.

2. RELEVANT DOCUMENTS

Documents here below identified are applicable and/or reference for the activities described in the present document and are considered part of it to the extent specified herein.

2.1 APPLICABLE DOCUMENTS

AD # (ID)	Doc Number	Issue	Date	Rev	Title
AD 1	AMS-RQ-CGS-002	1	April, 2007		Power Distribution System (PDS) Specification
AD 2	JSC-28792	D	March, 2005		AMS-02 Structural Verification Plan for the Space Transportation System and the International Space Station

Table 2-1 Applicable documents

2.2 REFERENCE DOCUMENTS

RD # (ID)	Doc Number	Issue	Date	Rev	Title
RD. 1	MIL-HDBK-5	H	Dec, 1998		Metallic Materials and Elements for Aerospace Vehicle Structures
RD. 2	File MATHCAD				LMSO bolt verification guidelines
RD. 3	NSTS 1700.7B		Jan, 1989		Safety policy and requirements for payloads using the space transportation system
RD. 4	NSTS 1700.7B ISS ADD		Dec, 1995		Safety policy and requirements
RD. 5			June, 1973		E. F. BRUHN – Analysis Design of Flight Vehicle Structures
RD. 6	AMSTCS-TN-CGS-007	1	25/03/08		Main and tracker radiators structural analysis report
RD. 7	SSP-57003		Aug, 2002	A	Attached payload interface requirements document

Table 2-2 Reference documents

Questo documento contiene informazioni di proprietà di CARLO GAVAZZI SPACE SpA. Tutti i diritti sono riservati.
All information contained in this document are property of CARLO GAVAZZI SPACE SpA. All right reserved.

3. PDS POSITION

In the following figure the position of the PDS in the WAKE view is presented: PDS is attached to the structure of WAKE.

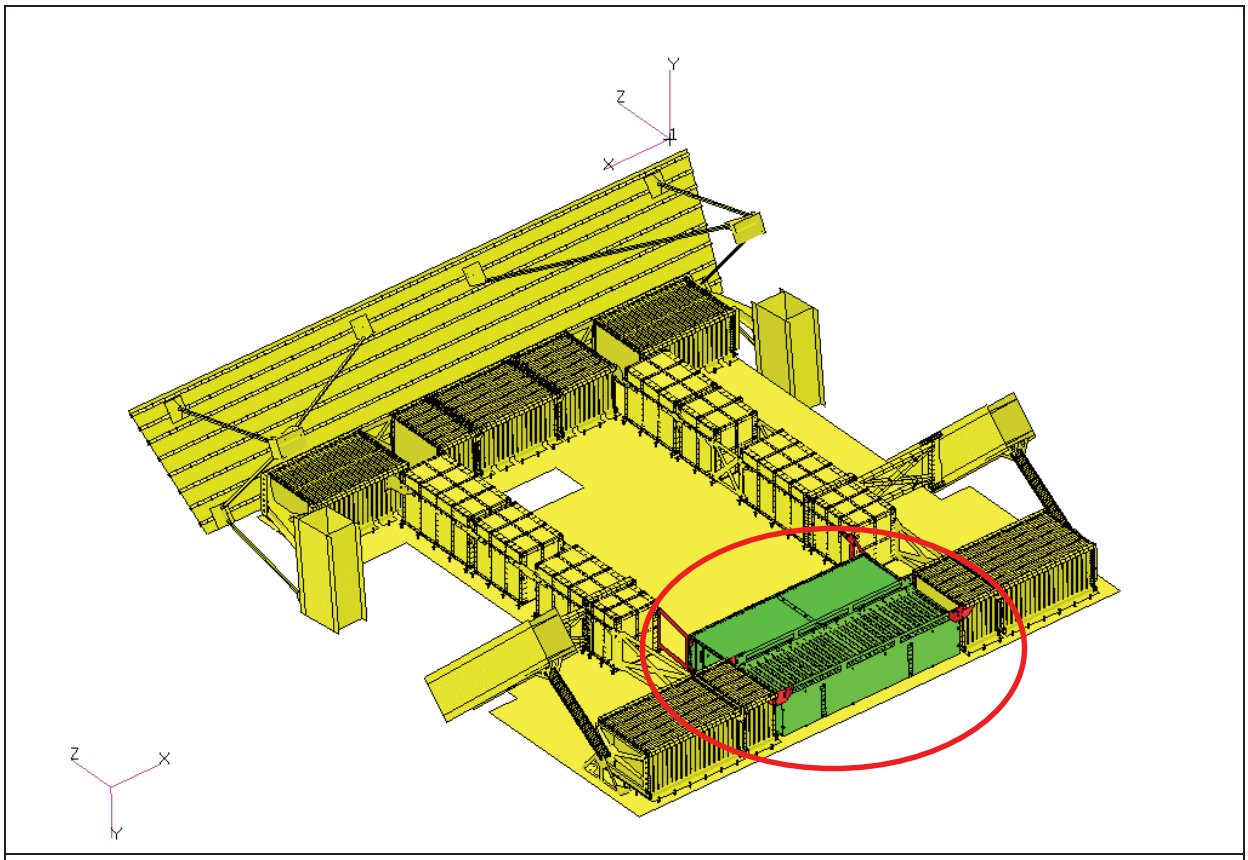

Figure 3-1: View of PDS attached to WAKE

Questo documento contiene informazioni di proprietà di CARLO GAVAZZI SPACE SpA. Tutti i diritti sono riservati.
All information contained in this document are property of CARLO GAVAZZI SPACE SpA. All right reserved.

4. PDS CONFIGURATIONS

Two different Configurations, depending on the applied loads (Test Loads and Flight Loads) and differing for constraints, are taken into account (See Chapter 6.6).

- in Test Configuration, Test Loads are applied, which are calculated with the CoG response approach, and constraints are shown in Figure 6-8:

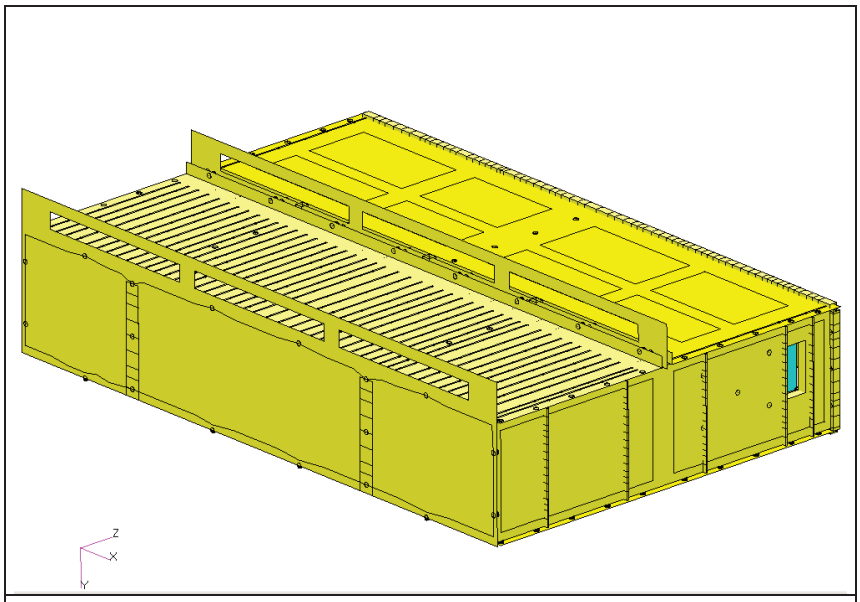

Figure 4-1: Test Configuration

- in Flight Configuration, Flight Loads are applied, which are given in AD.1, and constraints are shown in Figure 6-9:

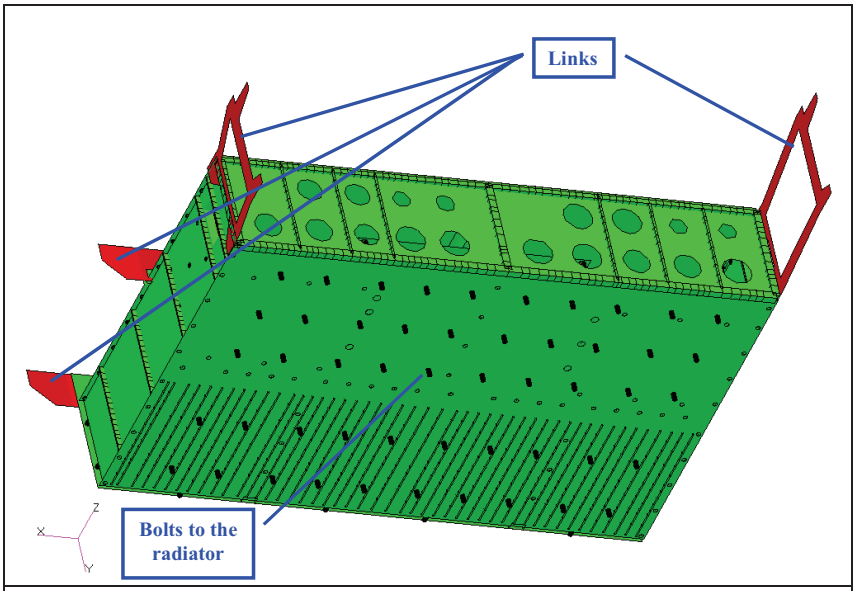

Figure 4-2: Flight Configuration

Questo documento contiene informazioni di proprietà di CARLO GAVAZZI SPACE SpA. Tutti i diritti sono riservati.
All information contained in this document are property of CARLO GAVAZZI SPACE SpA. All right reserved.

5. PDS STRUCTURAL VERIFICATION ITEM LIST

In the following tables the verified items are shown:

PDS VERIFICATION ITEM LIST					
ITEM	**DRAWING NUMBERS**	**MATERIAL**	**FAILURE MODE**	**REFERENCE PAGES**	**DESCRIPTION PAGE**
BASEPLATE	10-AMS02PDS-000.04	AL 7075 T7351	Strength	43; 61	22
RIGHT PANEL	10-AMS02PDS-200.00	AL 7075 T7351	Strength	43; 61	22
LEFT PANEL	10-AMS02PDS-300.00	AL 7075 T7351	Strength	43; 61	22
BACKPANEL FRAME	11-AMS02PDS-100.05	AL 7075 T7351	Strength	43; 61	22
FRONT PANEL	10-AMS02PDS-000.12	AL 7075 T7351	Strength	43; 61	22
REAR PANEL	10-AMS02PDS-100.00	AL 7075 T7351	Strength	43; 61	22
MIDDLE WALL	10-AMS02PDS-000.07	AL 7075 T7351	Strength	43; 61	23
STIFFENERS_REAR	10-AMS02PDS-000.08 10-AMS02PDS-000.09	AL 7075 T7351	Strength	43; 61	23
TOP COVER FRONT	10-AMS02PDS-100.10	AL 7075 T7351	Strength	43; 61	22
TOP COVER REAR	10-AMS02PDS-100.11	AL 7075 T7351	Strength	43; 61	22
DB SUPPORT	10-AMS02PDS-000.14	AL 7075 T7351	Strength	44; 62	23
ELECTRONICS	11-AMS02PDS-700.00 11-AMS02PDS-300.00 11-AMS02PDS-400.00 11-AMS02PDS-500.00 11-AMS02PDS-600.00 11-AMS02PDS-200.00 11-AMS02PDS-800.00 11-AMS02PDS-200.00	Polyimide	Strength	45; 63	24
INPUT STAGE	11-AMS02PDS-200.00	AL 7075 T7351	Strength	43-45; 61-63	24
JOINT #	**SIZE**	**MATERIAL**	**FAILURE MODE**	**REFERENCE PAGES**	**DESCRIPTION PAGE**
JOINT 1	NAS 1351N3-8	A286-160	Strength, bearing	47; 65	47
JOINT 2	NAS 1352N08	A286-160	Strength, bearing	50; 67	50
JOINT 3	MS24671-14	AISI 304	Strength, bearing	53; 69	53
JOINT 4	NAS 1351N3	A286-160	Strength, bearing	56; 71	56
JOINT 5	NAS 1351N3-8	A286-160	Strength, bearing	59; 73	59

Table 5-1 Verified items

FAILURE	VERIFICATION APPLIED
Strength	Von Mises on shell
	Maximum combined on bar
	Maximum combined and separation on bolt
Bearing	Holes bearing

Table 5-2 Failure Modes verification explanation

Questo documento contiene informazioni di proprietà di CARLO GAVAZZI SPACE SpA. Tutti i diritti sono riservati.
All information contained in this document are property of CARLO GAVAZZI SPACE SpA. All right reserved.

6. MODEL DESCRIPTION

In the following image a view of the entire PDS FE model is presented.

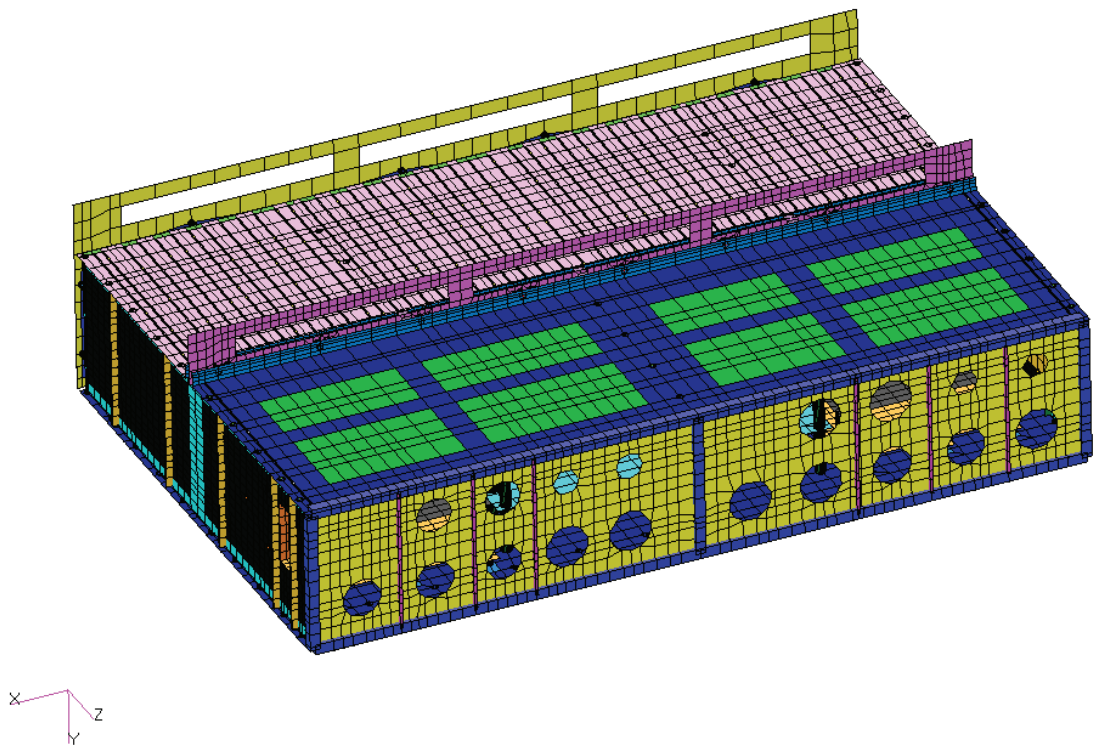

Figure 6-1: General view of PDS

In the following chapters the structural Finite Element Model is described (the used model for the PDS unit Model is "AMS_02_PDS_080306.bdf"; for the PDS integrated in the TCS model is: "AMS_02_PDS_080306-WAKE.bdf").

6.1 USED SOFTWARE

The software used for FEM pre and post processing is MSC/PATRAN 2005r2.
The software used for Finite Element analysis is MSC/NASTRAN V2005.

6.2 MODEL UNITS

Default FEM units (otherwise specified) are:

- Length [m]
- Mass [Kg]
- Force [N]
- Moment [Nm]
- Material density [Kg/m^3]
- Young's module [N/m^2]
- Stress [N/m^2]
- Displacement [m]

Questo documento contiene informazioni di proprietà di CARLO GAVAZZI SPACE SpA. Tutti i diritti sono riservati.
All information contained in this document are property of CARLO GAVAZZI SPACE SpA. All right reserved.

6.3 MODEL COORDINATE SYSTEM

For the PDS model, the AMS-02 coordinate system (Coord 1000 in Figure 6-2 and Coord 1 in Figure 6-3) is used in both Test and Flight Configurations:

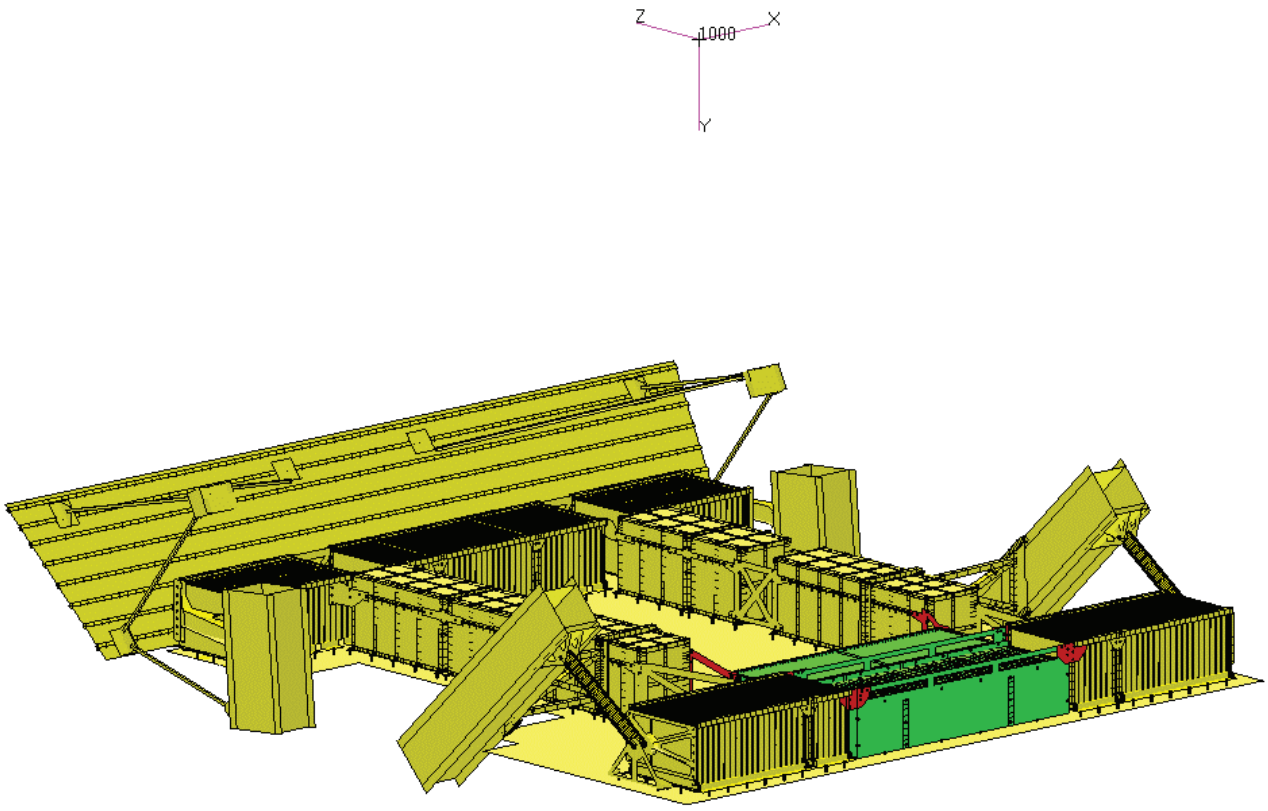

Figure 6-2: WAKE in AMS-02 coordinate system

Questo documento contiene informazioni di proprietà di CARLO GAVAZZI SPACE SpA. Tutti i diritti sono riservati.
All information contained in this document are property of CARLO GAVAZZI SPACE SpA. All right reserved.

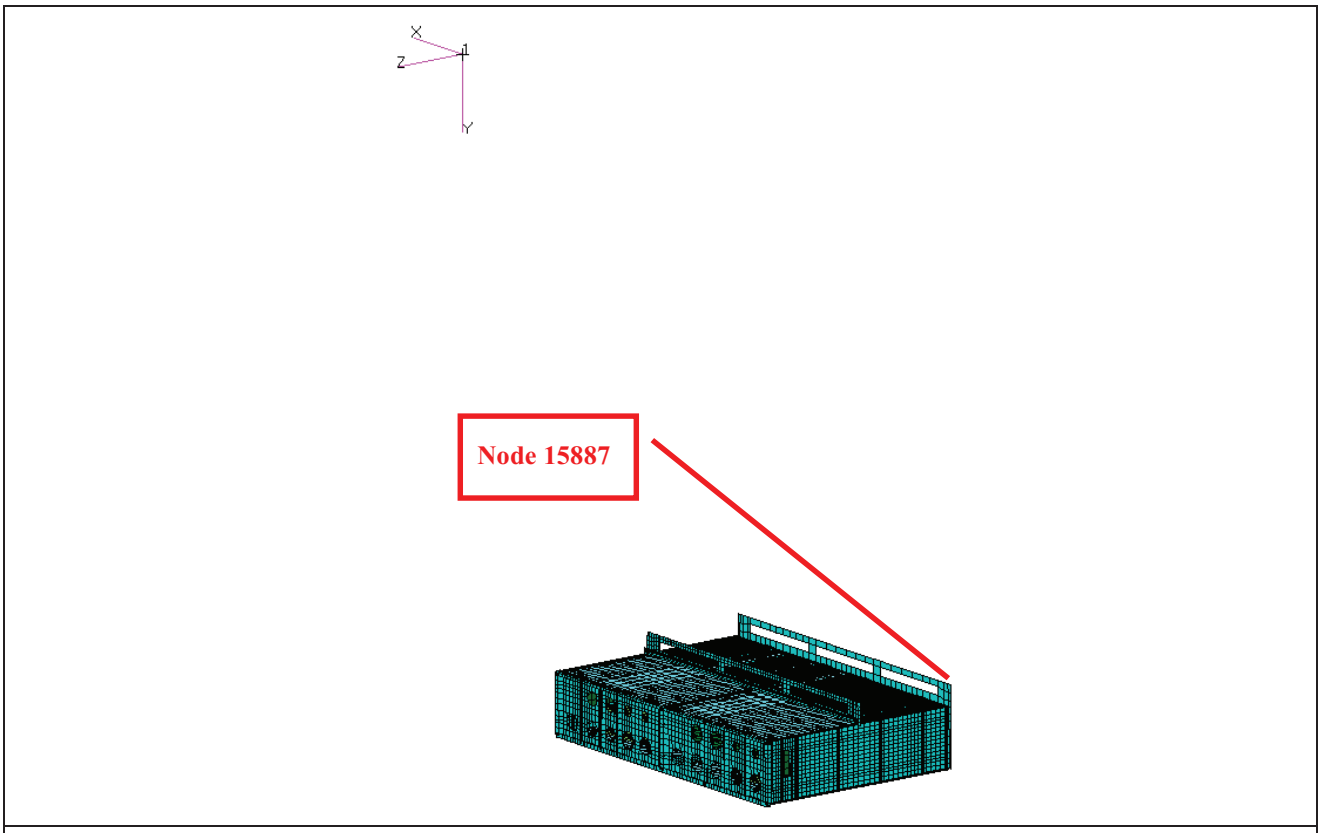

Figure 6-3: PDS in AMS-02 coordinate system

In the following figure two views of the position of node 15887 with respect to AMS-02 global coordinate system are presented:

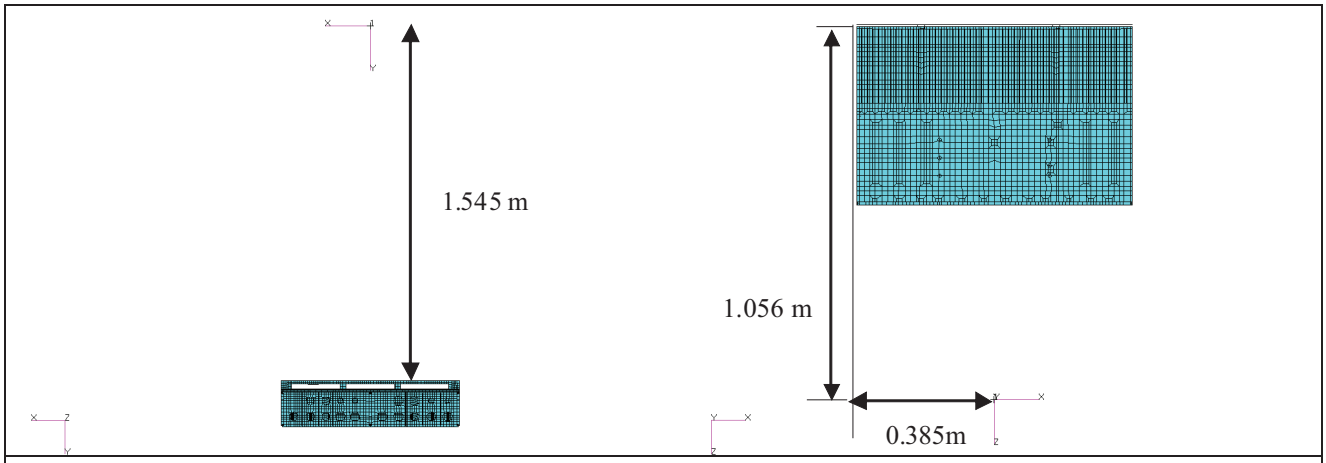

Figure 6-4: AMS-02 coordinate system

Questo documento contiene informazioni di proprietà di CARLO GAVAZZI SPACE SpA. Tutti i diritti sono riservati.
All information contained in this document are property of CARLO GAVAZZI SPACE SpA. All right reserved.

6.4 MODEL MATERIALS

In the following tables

- the properties of each material
- the items made of each material
- the corresponding NASTRAN card

are shown.

6.4.1 AL 7075 T7351

7075 Aluminium Alloy		
Source	MIL-HDBK-5H	
Specification	AMS 4078 and AMS-QQ-A-250/12	
Form	Plate	
Temper	T7351	
Thickness [in]	0.250 - 0.499	
Mechanical Properties		
	[MPa]	**[ksi]**
Ftu	468.84	68
Fty	393.00	57
Fcy	386.11	56
Fsu	262.00	38
Fbru	703.27	102
Fbry	544.69	79
E	71016	10300
Physical Properties		
	[kg/m^3]	**[lb/in^3]**
ρ	2796	0.101
ν	0.33	

Table 6-1 AL 7075 T7351 properties

NASTRAN CARD::	MAT1 2 7.1+10 .33 2796.
ITEMS:	Box panels Middle wall Stiffener_rear Pcb spacers Boards frames DB support Input stage structure

Table 6-2 AL 7075 T7351 in FE model

Questo documento contiene informazioni di proprietà di CARLO GAVAZZI SPACE SpA. Tutti i diritti sono riservati.
All information contained in this document are property of CARLO GAVAZZI SPACE SpA. All right reserved.

6.4.2 POLYIMIDE

POLYIMIDE			
Source	Overview - Thermoplastic Polyimide, Glass Fiber, from 'www.matweb.com'		
Mechanical Properties			
	[MPa]		**[ksi]**
Ft	190.00		27.56
Fc	220.00		31.91
Fs	83.00		12.04
Fbru	-		-
Fbry	-		-
	[MPa]	**Average [MPa]**	**[ksi]**
E	2900 - 19000	11000	1595.41
Physical Properties			
	[kg/m^3]	**Average [kg/m^3]**	**[lb/in^3]**
ρ	1350 - 1900	1500	0.054
ν	0.3		

Table 6-3 Polyimide properties

NASTRAN CARD:	`MAT1 5 1.1+10 .3 1500.`
ITEMS:	Motherboards Boards

Table 6-4: Polyimide in FE model

Questo documento contiene informazioni di proprietà di CARLO GAVAZZI SPACE SpA. Tutti i diritti sono riservati.
All information contained in this document are property of CARLO GAVAZZI SPACE SpA. All right reserved.

6.4.3 COPPER

Copper		
Source	Matweb	
Specification	Copper Annealed	
Mechanical Properties		
	[Mpa]	**[ksi]**
Ftu	210.29	30.5
Fty	33.30	4.83
E	110316	16000
G	45988	6670
Physical Properties		
	[kg/m^3]	**[lb/in^3]**
ρ	8960	0.324
ν	0.343	

Table 6-5 Copper properties

NASTRAN CARD:	`MAT1  3  1.1+11  .343  8960.`
ITEMS:	Bonding Bars

Table 6-6 Copper in FE model

Questo documento contiene informazioni di proprietà di CARLO GAVAZZI SPACE SpA. Tutti i diritti sono riservati.
All information contained in this document are property of CARLO GAVAZZI SPACE SpA. All right reserved.

6.4.4 PEEK

Reinforced PEEK		
Source	Vendor	
Specification	MIL-P-46183 Peek Type 2 Class 3 reinforced with 30% glass fiber	
Mechanical Properties		
	[Mpa]	**[ksi]**
Ftu	152	22
E	6895	1000
G	6895	1000
Physical Properties		
	[kg/m^3]	**[lb/in^3]**
ρ	1520	0.0549
ν	NA	

Table 6-7 Peek properties

NASTRAN CARD:	MAT1 4 6.89+9 6.89+9 1520.
ITEMS:	Bonding Bars Spacer

Table 6-8 Peek in FE model

Questo documento contiene informazioni di proprietà di CARLO GAVAZZI SPACE SpA. Tutti i diritti sono riservati.
All information contained in this document are property of CARLO GAVAZZI SPACE SpA. All right reserved.

6.4.5 DUMMY STEEL

A dummy material with reference properties of steel is used for beam elements that represent bolted connections. The corresponding NASTRAN BULK data card is:

```
MAT1     1       2.1+11          .33     .1
```

6.5 FE MODEL DESCRIPTION

In this chapter the components of PDS Finite Element Model are presented:

GRID POINTS	20853
ELEMENTS	21795
CBAR	2816
CONM2	4
CQUAD4	18628
CTRIA3	75
RBE2	272

Table 6-9: Model summary

PDS NASTRAN model subcomponents are presented in the following chapters:

- MAIN STRUCTURE
- INTERNAL FRAMES AND SUPPORTS
- ELECTRONIC COMPONENTS

Questo documento contiene informazioni di proprietà di CARLO GAVAZZI SPACE SpA. Tutti i diritti sono riservati.
All information contained in this document are property of CARLO GAVAZZI SPACE SpA. All right reserved.

6.5.1 MAIN STRUCTURE

The PDS main structure is presented in the following figure:

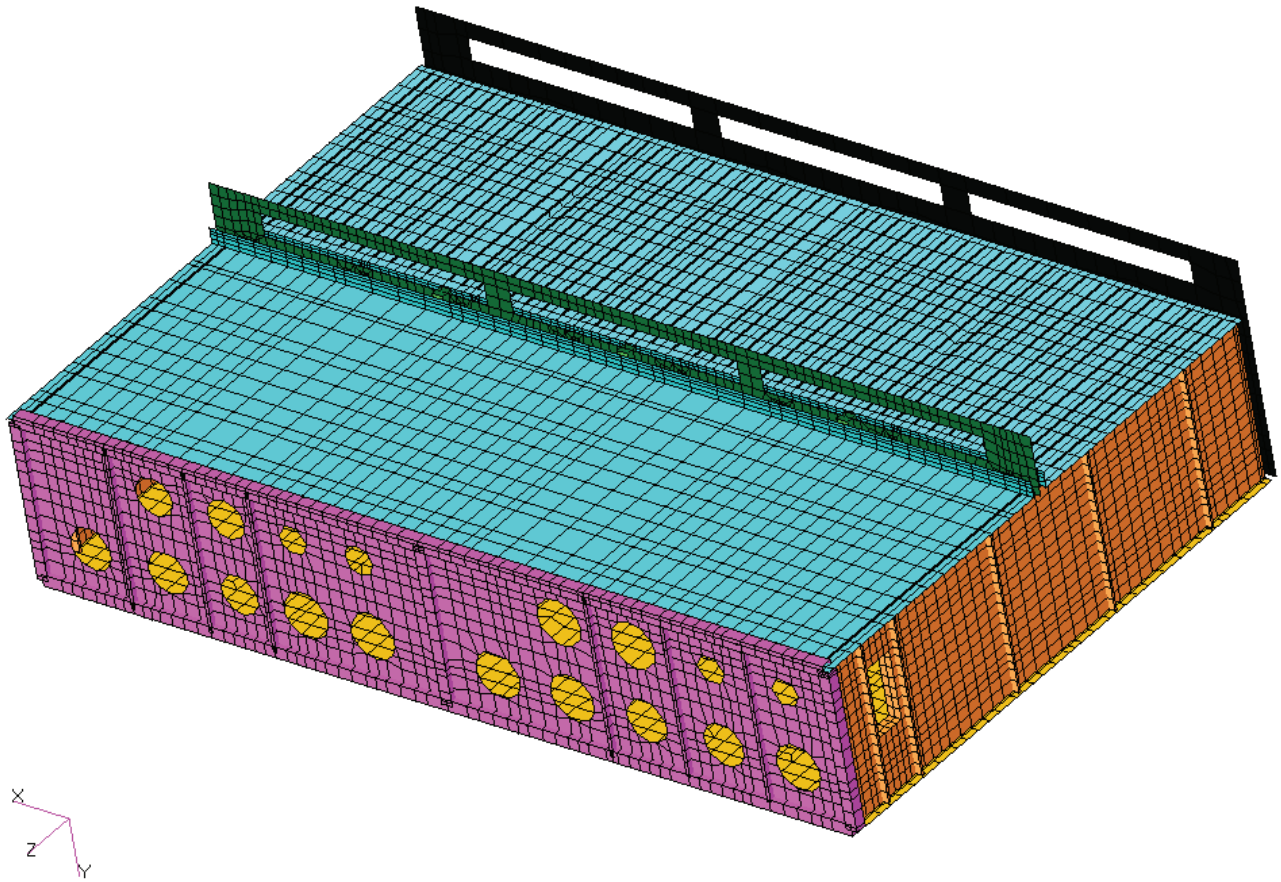

Main Dimensions [m]	Length: 0.767	Width: 0.503	Height: 0.193
Mass [kg]	Total: 18.35		
Material	AL 7075 T7351		
Thickness range [m]	[0.0025, 0.011]		
FEM elements	Shell, bar		

Figure 6-5: Main structure

Questo documento contiene informazioni di proprietà di CARLO GAVAZZI SPACE SpA. Tutti i diritti sono riservati.
All information contained in this document are property of CARLO GAVAZZI SPACE SpA. All right reserved.

6.5.2 INTERNAL FRAMES AND SUPPORTS

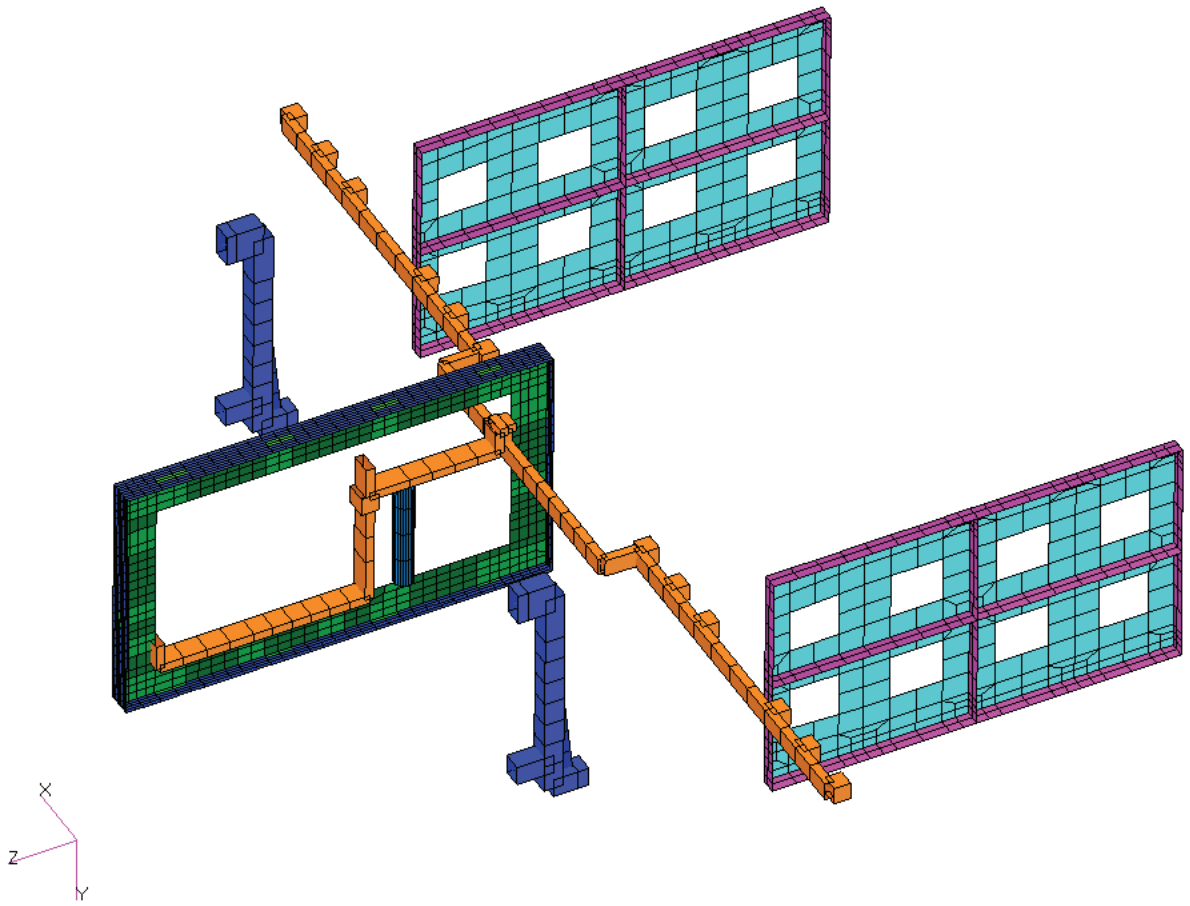

Main Dimensions [m]	Length:0.232	Width: 0.134
Mass [kg]	Total: 1.592	
Material	AL 7075 T7351, Copper, Peek	
Thickness range [m]	[0.002, 0.010]	
FEM elements	Shell, bar	

Figure 6-6: Internal frames

Questo documento contiene informazioni di proprietà di CARLO GAVAZZI SPACE SpA. Tutti i diritti sono riservati.
All information contained in this document are property of CARLO GAVAZZI SPACE SpA. All right reserved.

6.5.3 ELECTRONIC COMPONENTS

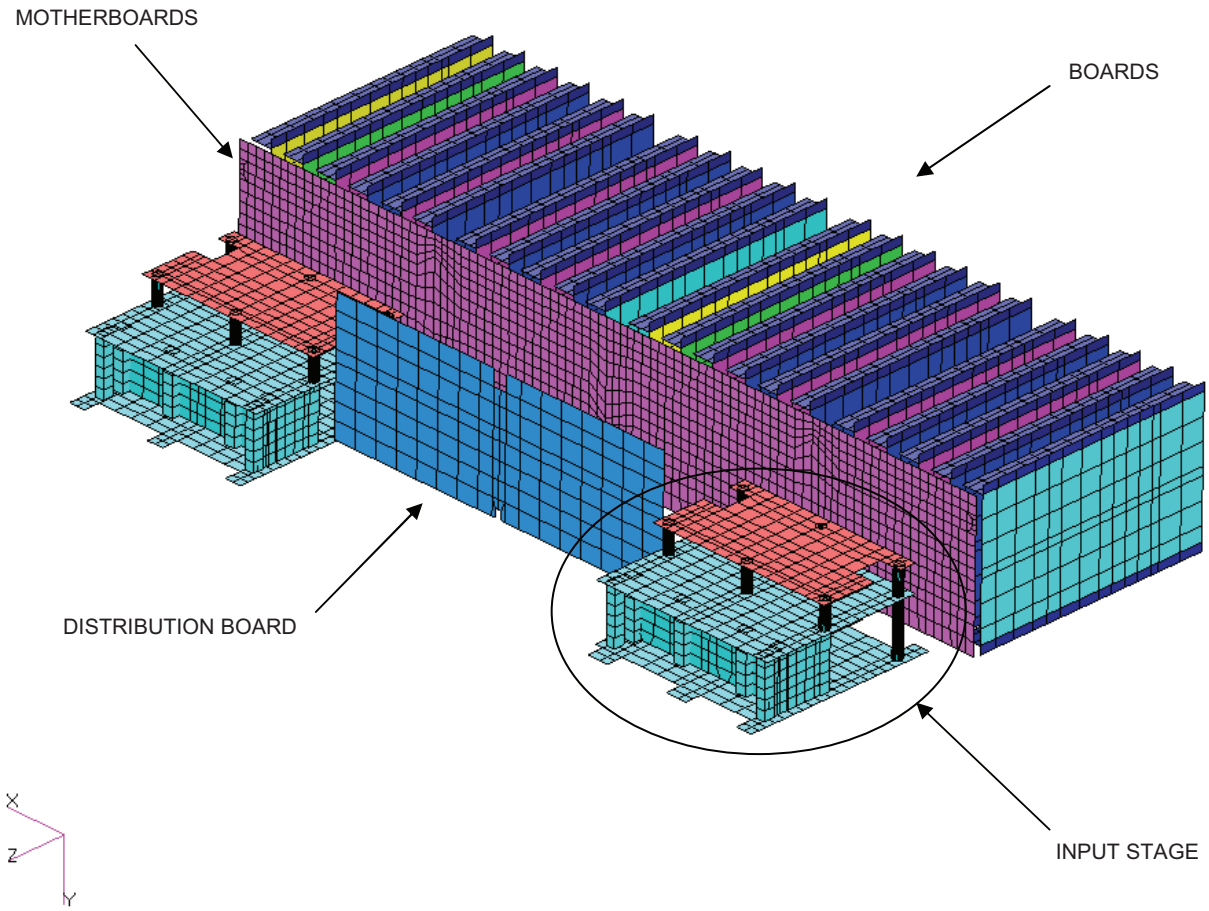

Main Dimensions [m]	Length: 0.73	Width: 0.43	Height: 0.14
Mass [kg]	Total: 27.5		
Material	AL 7075 T7351, Polyimide		
Thickness range [m]	[0.0018, 0.003]		
FEM elements	Shell, bar, conm2		

Figure 6-7: Motherboards and boards

Questo documento contiene informazioni di proprietà di CARLO GAVAZZI SPACE SpA. Tutti i diritti sono riservati.
All information contained in this document are property of CARLO GAVAZZI SPACE SpA. All right reserved.

6.6 MODEL BOUNDARY CONDITIONS

In Test Configuration, the PDS is constrained through 50 bolts positioned on the lower side (see Figure 6-8).

For all these bolts, the 6 DOFs are constrained.

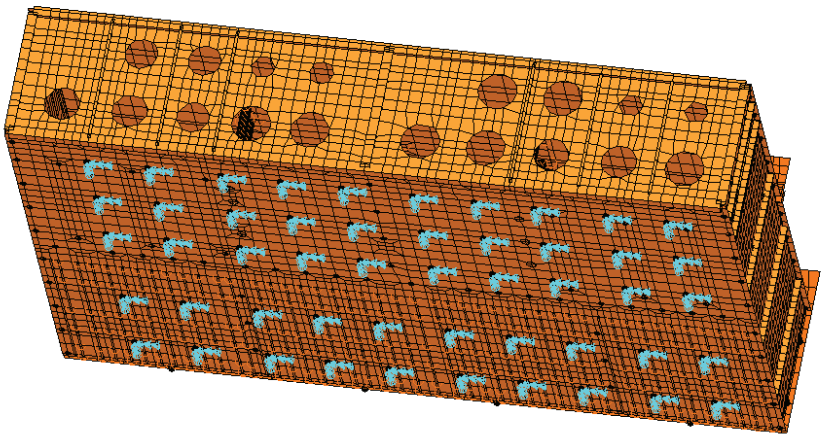

Figure 6-8: Model boundary conditions (Test Configuration)

In Flight configuration, WAKE is grounded and the PDS is connected to WAKE through 50 bolts on the lower side (see Figure 6-8), and other 24 bolts to the Links (see Figure 6-9).

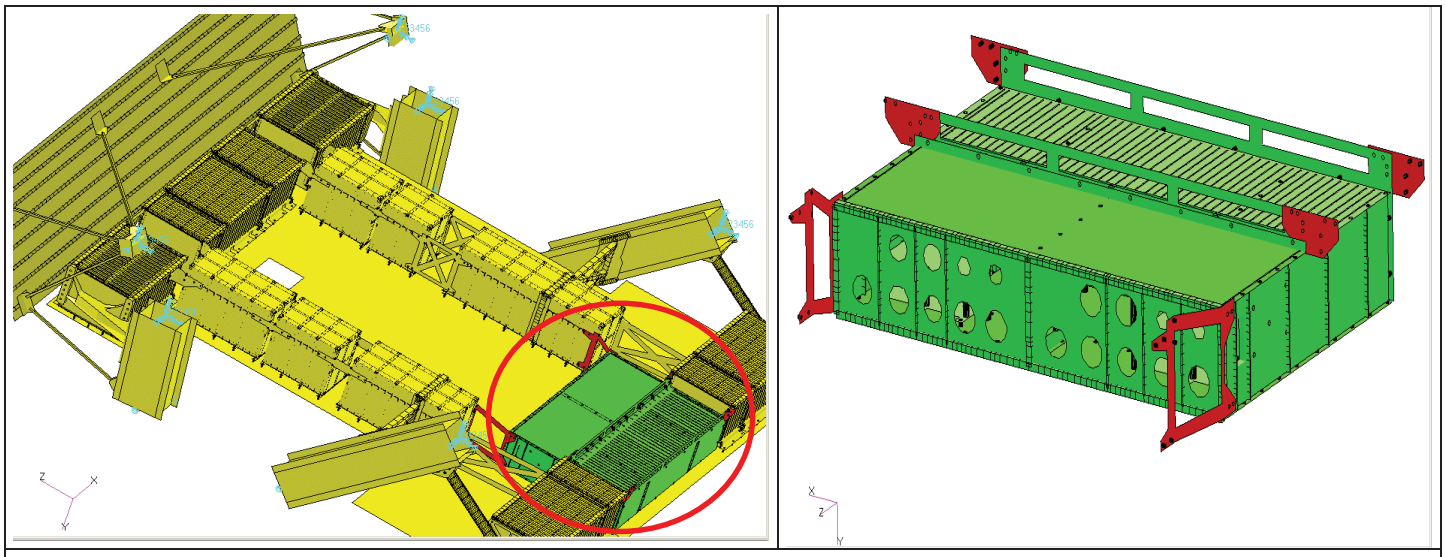

Figure 6-9: Model boundary conditions (Flight Configuration)

Questo documento contiene informazioni di proprietà di CARLO GAVAZZI SPACE SpA. Tutti i diritti sono riservati.
All information contained in this document are property of CARLO GAVAZZI SPACE SpA. All right reserved.

6.7 MODEL MASS BUDGET

The mass of the model is without any contingency.

PDS MASS BUDGET	ITEM	UNIT CAD MASS [kg]	QUANTITY	FEM MASS [kg]	REMARKS
MAIN STRUCTURE	BASEPLATE	5.70	1	6.02	
	RIGHT PLATE	0.80	1	0.85	
	LEFT PLATE	0.82	1	0.87	
	BACKPLANE FRAME	1.84	1	1.94	
	FRONT PANEL	1.99	1	2.10	
	REAR PANEL+CONNECTORS	1.65	1	2.96	
	TOP COVER FRONT	2.39	1	2.53	
	TOP COVER REAR	1.60	1	1.69	
	FASTENERS	1	-	-	Spread on the other structural items and on the internal frames
	SUB-TOTAL	17.79		18.96	
INTERNAL FRAMES	MIDDLE WALL	0.27	2	0.57	
	STIFFNESS REAR	0.3	1	0.32	
	DB SUPPORT	0.055	2	0.11	
	BONDING BARS	0.57	1	0.57	
	SUB-TOTAL	1.52		1.57	
MOTHERBOARDS AND BOARDS	BACKPLANE	0.2	2	1.62	
	PB2	1.23	8	11.84	
	ESEM3A	0.72	8	5.76	
	ESEM3B	0.78	2	1.56	
	CAN BUS	0.45	2	0.90	
	ESEM 1	0.82	2	1.64	
	HARNESS	2.43	-	-	Added to 'rear panel' and 'backplane'
	POTTING	2	-	-	Spread on the 'PB2' boards
	SUB-TOTAL	24.53		23.32	
INPUT STAGE	INPUT STAGE	2	2	4.00	
	DISTRIBUTION BOARD	0.21	1	0.21	
	SUB-TOTAL	4.21		4.21	
	TOTAL	48.05		48.05	

Table 6-10: Model mass budget

Questo documento contiene informazioni di proprietà di CARLO GAVAZZI SPACE SpA. Tutti i diritti sono riservati.
All information contained in this document are property of CARLO GAVAZZI SPACE SpA. All right reserved.

6.8 MODEL CHECK

6.8.1 PDS TEST CONFIGURATION MODEL SIZE AND GEOMETRY

In the following tables the summary of the check runs that verify the mathematical correctness of the assembly model of the PDS unit is shown:

MATHEMATICAL MODEL VERIFICATION RESULTS
GEOMETRY CHECK

MODEL FILE NAMES :
AMS_02_PDS_080306.bdf

RUN FILE NAMES
AMS_02_PDS_MODAL_080306.dat, param.blk

MODEL UNITS
Length=m, mass=Kg, density=Kg/m^3, Young mod.=N/m^2, Stress=N/m^2, Deformation=m, Strain En=N*m=Joule.

```
                    M O D E L   S U M M A R Y

NUMBER OF GRID      POINTS    =    20853

NUMBER OF CBAR      ELEMENTS =      2816
NUMBER OF CONM2     ELEMENTS =         4
NUMBER OF CQUAD4    ELEMENTS =     18628
NUMBER OF CTRIA3    ELEMENTS =        75

NUMBER OF RBE2      ELEMENTS =       272
```

```
                    E L E M E N T   G E O M E T R Y   T E S T   R E S U L T S   S U M M A R Y
                                  TOTAL NUMBER OF TIMES TOLERANCES WERE EXCEEDED
                    ASPECT/       MINIMUM       MAXIMUM     SURFACE/FACE                EDGE POINT     JACOBIAN
ELEMENT TYPE  SKEW ANGLE  TAPER RATIO  INTER. ANGLE  INTER. ANGLE  WARP FACTOR  OFFSET RATIO  LENGTH RATIO  DETERMINANT
     BAR          N/A          N/A          N/A          N/A          N/A           0           N/A           N/A
     QUAD4          0           35           26           26            0          N/A          N/A           N/A
     TRIA3          0          N/A          N/A            0          N/A          N/A          N/A           N/A

     N/A IN THE ABOVE TABLE INDICATES TESTS THAT ARE NOT APPLICABLE TO THE ELEMENT TYPE AND WERE NOT PERFORMED.
                    FOR ALL ELEMENTS WHERE GEOMETRY TEST RESULTS HAVE EXCEEDED TOLERANCES,

      QUAD4    ELEMENT ID    20999 PRODUCED LARGEST  TAPER RATIO      OF       0.81 (TOLERANCE =        0.50).
      QUAD4    ELEMENT ID    35079 PRODUCED SMALLEST INTERIOR ANGLE   OF      21.68 (TOLERANCE =       30.00).
      QUAD4    ELEMENT ID    35079 PRODUCED LARGEST  INTERIOR ANGLE   OF     158.32 (TOLERANCE =      150.00).
```

Table 6-11: FEM Geometry Check

Questo documento contiene informazioni di proprietà di CARLO GAVAZZI SPACE SpA. Tutti i diritti sono riservati.
All information contained in this document are property of CARLO GAVAZZI SPACE SpA. All right reserved.

6.8.2 FREE-FREE AND HARDMOUNTED MODES

MATHEMATICAL MODEL VERIFICATION RESULTS
MASS PROPERTIES, FREE-FREE MODES, HARDMOUNTED MODES

MODEL FILE NAMES
AMS_02_PDS_080306.bdf

RUN FILE NAMES
AMS_02_PDS_MODAL_080306.dat, AMS_02_PDS_MODAL_FREE_080306.dat, param.blk

MODEL UNITS
Length=m, mass=Kg, density=Kg/m^3, Young mod.=N/m^2, Stress=N/m^2, Deformation=m, Strain En=N*m=Joule.

PARAMETERS:	
PARAM,POST,0	PARAM,PRGPST,NO
PARAM,PRTMAXIM,YES	PARAM,COUPMASS,1
PARAM,AUTOSPC,YES	PARAM,GRDPNT,0
PARAM,NOCOMPS,0	PARAM,K6ROT,1.
	PARAM,WTMASS,1.

MASS PROPERTIES

```
                O U T P U T   F R O M   G R I D   P O I N T   W E I G H T   G E N E R A T O R
                                          REFERENCE POINT =        0
                                                   M O
*  4.805453E+01 -1.224622E-17  9.462605E-18  4.505855E-18 -4.096521E+01 -7.969725E+01 *
* -1.224622E-17  4.805453E+01  1.435216E-18  4.096521E+01  1.131022E-17 -3.151086E-01 *
*  9.462605E-18  1.435216E-18  4.805453E+01  7.969725E+01  3.151086E-01 -1.581580E-17 *
*  4.505855E-18  4.096521E+01  7.969725E+01  1.681972E+02  5.215769E-01 -3.014896E-01 *
* -4.096521E+01  1.131022E-17  3.151086E-01  5.215769E-01  3.841599E+01  6.790419E+01 *
* -7.969725E+01 -3.151086E-01 -1.581580E-17 -3.014896E-01  6.790419E+01  1.348248E+02 *
                                                   S
                          *  1.000000E+00  0.000000E+00  0.000000E+00 *
                          *  0.000000E+00  1.000000E+00  0.000000E+00 *
                          *  0.000000E+00  0.000000E+00  1.000000E+00 *
          DIRECTION
     MASS AXIS SYSTEM (S)     MASS              X-C.G.        Y-C.G.        Z-C.G.
            X            4.805453E+01      9.376544E-20  1.658475E+00 -8.524733E-01
            Y            4.805453E+01     -6.557312E-03  2.353623E-19 -8.524733E-01
            Z            4.805453E+01     -6.557312E-03  1.658475E+00 -3.291220E-19
                                                   I(S)
                          *  1.099581E+00  1.022822E-03  3.286791E-02 *
                          *  1.022822E-03  3.492179E+00  3.558555E-02 *
                          *  3.286791E-02  3.558555E-02  2.646835E+00 *
                                                   I(Q)
                          *  2.646038E+00                             *
                          *                1.098882E+00               *
                          *                             3.493674E+00 *
                                                    Q
                          *  2.125791E-02 -9.997740E-01  1.494333E-04 *
                          * -4.197505E-02 -7.431681E-04  9.991184E-01 *
                          * -9.988925E-01 -2.124544E-02 -4.198136E-02 *
```

RIGID BODY NORMAL MODE CHECK

R E A L E I G E N V A L U E S

MODE	EXTRACTION	EIGENVALUE	RADIANS	CYCLES
1	1	-1.678875E-06	1.295714E-03	2.062193E-04
2	2	6.615802E-07	8.133758E-04	1.294528E-04
3	3	9.617772E-07	9.807025E-04	1.560836E-04
4	4	1.689225E-06	1.299702E-03	2.068540E-04
5	5	1.933709E-06	1.390579E-03	2.213175E-04
6	6	4.103611E-06	2.025737E-03	3.224061E-04
7	7	2.990950E+05	5.468958E+02	8.704116E+01

HARDMOUNTED NORMAL MODE CHECK

R E A L E I G E N V A L U E S

MODE	EXTRACTION	EIGENVALUE	RADIANS	CYCLES
1	1	2.973038E+05	5.452557E+02	8.678014E+01
2	2	2.991895E+05	5.469822E+02	8.705492E+01
3	3	2.992687E+05	5.470546E+02	8.706644E+01
4	4	2.992778E+05	5.470629E+02	8.706776E+01
5	5	2.992994E+05	5.470826E+02	8.707090E+01
6	6	2.993375E+05	5.471174E+02	8.707644E+01
7	7	2.993734E+05	5.471503E+02	8.708167E+01
8	8	2.994462E+05	5.472167E+02	8.709225E+01
9	9	3.977315E+05	6.306595E+02	1.003726E+02
10	10	3.979174E+05	6.308069E+02	1.003960E+02

Table 6-12: FEM mass properties, free-free modes, hard mounted modes

Questo documento contiene informazioni di proprietà di CARLO GAVAZZI SPACE SpA. Tutti i diritti sono riservati.
All information contained in this document are property of CARLO GAVAZZI SPACE SpA. All right reserved.

6.8.3 1 G CHECK

MATHEMATICAL MODEL VERIFICATION RESULTS
1g CHECK

MODEL FILE NAMES :
AMS_02_PDS_080306.bdf

RUN FILE NAMES
AMS_subcases_1gchk.blk, AMS_grav_1gchk.blk, param.blk, AMS_02_PDS_STATIC_1G_080306dat,

PARAMETERS:	
PARAM,POST,0	PARAM,PRGPST,NO
PARAM,PRTMAXIM,YES	PARAM,COUPMASS,1
PARAM,AUTOSPC,YES	PARAM,GRDPNT,0
PARAM,NOCOMPS,0	PARAM,K6ROT,1.
	PARAM,WTMASS,1.

UNITY GRAVITY LOADING CHECK (COORD 0)

M = 48.05 Kg
g = 9.81
Fxyz = 471.41 N

OLOAD RESULTANT

	T1	T2	T3	R1	R2	R3
10001	4.714150E+02	-1.201352E-16	9.282335E-17	4.419426E-17	-4.018687E+02	-7.818301E+02
10002	-1.201414E-16	4.714150E+02	1.407847E-17	4.018687E+02	1.109588E-16	-3.091216E+00
10003	9.281995E-17	1.407841E-17	4.714150E+02	7.818301E+02	3.091216E+00	-1.551418E-16

SPCFORCE RESULTANT

	T1	T2	T3	R1	R2	R3
10001	-4.714150E+02	1.659117E-12	-2.677059E-11	-4.633538E-11	4.018687E+02	7.818300E+02
10002	-2.174172E-11	-4.714150E+02	-2.766987E-11	-4.018687E+02	4.958281E-09	3.091216E+00
10003	-3.280043E-11	-2.286171E-12	-4.714150E+02	-7.818300E+02	-3.091216E+00	5.674750E-11

EPSILON

LOAD SEQ. NO.	EPSILON	EXTERNAL WORK
1	-9.2479701E-14	1.9007587E-03
2	-1.4580047E-13	5.5399811E-04
3	2.0169218E-14	3.4931599E-04

Table 6-13: FEM 1g check

Questo documento contiene informazioni di proprietà di CARLO GAVAZZI SPACE SpA. Tutti i diritti sono riservati.
All information contained in this document are property of CARLO GAVAZZI SPACE SpA. All right reserved.

6.8.4 STRAIN ENERGY CHECK

MATHEMATICAL MODEL VERIFICATION RESULTS
STRAIN ENERGY CHECK

MODEL FILE NAMES :
AMS_02_PDS_080306.bdf

RUN FILE NAMES
AMS_02_PDS_STRAIN_ENERGY_080306.dat, param.blk

COMAND:
GROUNDCHECK(SET=ALL,THRESH=1.E-3,DATAREC=YES) = YES

PARAMETERS:	
PARAM,POST,0	PARAM,PRGPST,NO
PARAM,PRTMAXIM,YES	PARAM,COUPMASS,1
PARAM,AUTOSPC,YES	PARAM,GRDPNT,0
PARAM,NOCOMPS,0	PARAM,K6ROT,1.
	PARAM,WTMASS,1.

STRAIN ENERGY CHECK [J]

```
   RESULTS OF RIGID BODY CHECKS OF MATRIX KGG      (G-SET)  FOLLOW:
PRINT RESULTS IN ALL SIX DIRECTIONS AGAINST THE LIMIT OF   1.000000E-03
                DIRECTION        STRAIN ENERGY        PASS/FAIL
                ---------        -------------        ---------
                    1               7.014148E-05          PASS
                    2               3.301642E-05          PASS
                    3               2.032332E-05          PASS
                    4               1.144433E-04          PASS
                    5               3.856081E-05          PASS
                    6               2.464509E-04          PASS

   RESULTS OF RIGID BODY CHECKS OF MATRIX KNN      (N-SET)  FOLLOW:
PRINT RESULTS IN ALL SIX DIRECTIONS AGAINST THE LIMIT OF   1.000000E-03
                DIRECTION        STRAIN ENERGY        PASS/FAIL
                ---------        -------------        ---------
                    1               7.884856E-05          PASS
                    2               3.287369E-05          PASS
                    3               1.174276E-05          PASS
                    4               9.561855E-05          PASS
                    5               4.491790E-05          PASS
                    6               2.537278E-04          PASS

   RESULTS OF RIGID BODY CHECKS OF MATRIX KFF      (F-SET)  FOLLOW:
PRINT RESULTS IN ALL SIX DIRECTIONS AGAINST THE LIMIT OF   1.000000E-03
                DIRECTION        STRAIN ENERGY        PASS/FAIL
                ---------        -------------        ---------
                    1               7.884856E-05          PASS
                    2               3.287369E-05          PASS
                    3               1.174276E-05          PASS
                    4               9.561855E-05          PASS
                    5               4.491790E-05          PASS
                    6               2.537278E-04          PASS
```

Table 6-14: FEM Strain Energy check

Questo documento contiene informazioni di proprietà di CARLO GAVAZZI SPACE SpA. Tutti i diritti sono riservati.
All information contained in this document are property of CARLO GAVAZZI SPACE SpA. All right reserved.

7. DIMENSIONING LOADS

7.1 TEST LOADS

AD 2 foresees an optional random vibration test for structural verification. Test level (minimum workmanship level for the Alpha Magnetic Spectrometer–02) is reported in next table and figure.
Random Vibration Load Factor (RVLF) derived from this load shall be applied in any axis, with a load factor of 10% of the primary load applied to the remaining two orthogonal axes, simultaneously.

Test loads are applied in Test Configuration.

	Frequency	PSD
All axes	20 Hz	0.01 g^2/Hz
	20-80 Hz	+ 3 dB/Octave
	80-500 Hz	0.04 g^2/Hz
	500-2000 Hz	- 3 dB/Octave
	2000 Hz	0.01 g^2/Hz
	Overall = 6.8 gRMS	

Table 7-1: MWL Random vibration test level

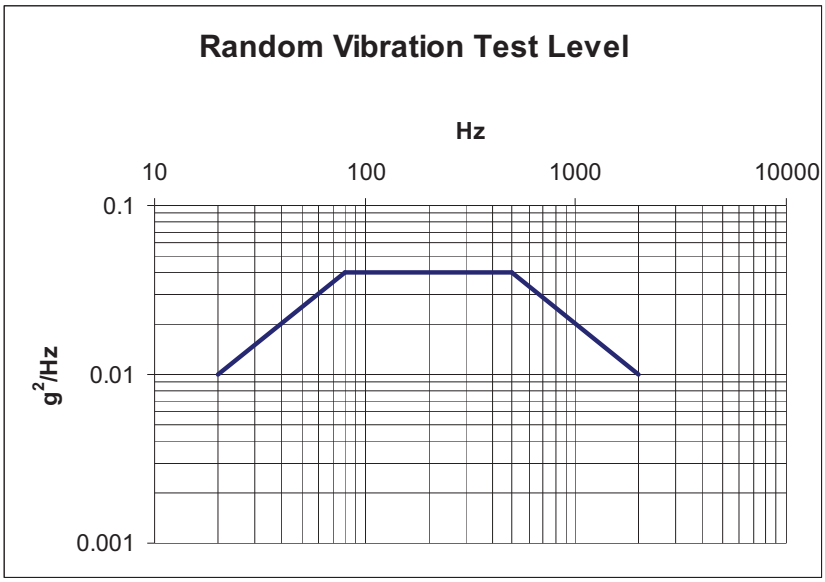

Figure 7-1: Random vibration test level

To calculate the RVLF due to the input spectrum it shall be used the Miles' formula on the effective mass of model and the random response at the CoG of the PDS model. The comparison between these values gives the greater RVLF used for each axes.

Questo documento contiene informazioni di proprietà di CARLO GAVAZZI SPACE SpA. Tutti i diritti sono riservati.
All information contained in this document are property of CARLO GAVAZZI SPACE SpA. All right reserved.

In the PSD range (20Hz to 1000Hz) the effective masses of the model are evaluated.
For the (i-th) modes with an associated mass that is more than 0.5% of the entire model, the load factor is calculated $n_i = \sqrt{\pi/2 \times f_i \times Q \times W_i}$;

Values P_i (1σ) [N] for each considered mode are calculate from: $P_i = n_i * g * m_{eff,\,I}$;

Global value n (3σ) [g-units] for the complete structure is finally calculated from: $n = 3 \times \frac{\sqrt{\sum P_i^2}}{\sum m_{eff,i} \times g}$.

The CoG responses (grms) are evaluated with a damping coefficient of 2% and considering all modes with an associated mass greater than 0.5%. The global value n is calculated with 3σ approach.

Thus, resulting Test Configuration load cases are:

LOAD CASES	DESCRIPTION	X DIR	Y DIR	Z DIR
LC 1-8	Design launch loads	± 19 g	± 1.9 g	± 1.9 g
LC 9-16	Design launch loads	± 3.4 g	± 34 g	± 3.4 g
LC 17-24	Design launch loads	± 2.5 g	± 2.5 g	± 25 g

Table 7-2: Test Configuration loads

Questo documento contiene informazioni di proprietà di CARLO GAVAZZI SPACE SpA. Tutti i diritti sono riservati.
All information contained in this document are property of CARLO GAVAZZI SPACE SpA. All right reserved.

7.2 FLIGHT LOADS

7.2.1 INERTIAL LOADS AND ENFORCED DISPLACEMENT

The dimensioning loads (AD 2) are based on the results of the CLA performed by LMSO, using the FEM Model of the entire AMS-02. The Dimensioning Loads used (series 1000 and 2000) are composed by both inertial loads and enforced displacements of the constraints in Flight Configuration (PDS mounted on WAKE). In the following table the set of the load cases used for the analysis is presented: in the first table the entire set is shown with the inertial loads applied; in the second table the enforced displacements of load case 1001 are presented.

Load Case	Nx (g)	Ny (g)	Nz (g)	Rx (rad/sec^2)	Ry (rad/sec^2)	Rz (rad/sec^2)
1001-1064	3.7	1.4	1.4	4.5	8.4	3.9
	-0.4	-1.6	-1.5	-4.1	-11.0	-4.1
2001-2064	1.2	0.7	2.1	5.2	10.7	6.0
	-1.3	-0.6	-5.6	-4.7	-13.9	-4.8

Table 7-3: Applied set of load cases

Sets 1000 and 2000 are applied in AMS-02 center of gravity in launch configuration.

NODE	ENFORCED DISPLACEMENTS [m]		
	X	Y	Z
200601	0.00397	0.00271	-0.00087
200603	0.00344	0.0047	0.00294
217001	0.00252	0.00444	0.00172
217002	0.00349	0.00444	0.00261
217003	0.00272	0.00248	-0.00069
217004	0.00403	0.00258	-0.00092
217005	0.00414	0.00324	0.00163
217006	0.00665	0.00262	0.00254
217007	0.00419	0.00273	-0.00069
217008	0.00716	0.00272	-0.00095

Table 7-4: Load case 1001 displacements

Questo documento contiene informazioni di proprietà di CARLO GAVAZZI SPACE SpA. Tutti i diritti sono riservati.
All information contained in this document are property of CARLO GAVAZZI SPACE SpA. All right reserved.

7.2.2 ACOUSTIC LOADS

For the launch (set 1000) the acoustic loads must be superimposed on the inertial and displacement loads. The AD 2 provides the load factors (g) that must be applied to WAKE. LMSO has provided the method for the application of this load factor:

1) Define the regions of the panel where the acoustic loads are applied (area that does not have an electronic crate behind);
2) Calculate the mass of this region;
3) Calculate the force that act on the radiators (load factors, 3 from AD 2, times the mass of the region times g);
4) Calculate the equivalent pressure (divide the force by the area of the region);
5) Apply the pressure to the model (the resultant of the pressure shall be equal to the force).

7.2.2.1 CALCULATION OF THE ACOUSTIC LOADS FOR WAKE RADIATOR

The calculation of the acoustic load for the WAKE radiator is performed in RD. 6*:*

1) In the following figure the area where the acoustic loads are applied is shown in red (1.78 m^2).

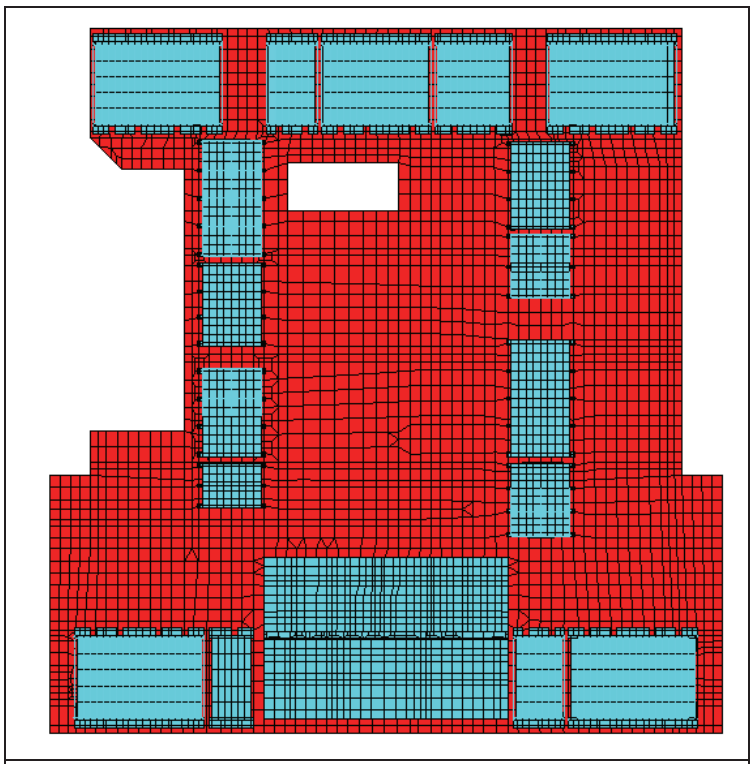

Figure 7-2: Definition of the acoustic area on WAKE Radiator

2) The mass of the panel where the acoustic loads are applied is 26 Kg.
3) The force that acts on the panel is 765 N (26 Kg *3*9.81 m/s^2).
4) & 5) The equivalent pressure (shown in the following figure) is 429 Pa (765 N / 1.78 m^2)

Questo documento contiene informazioni di proprietà di CARLO GAVAZZI SPACE SpA. Tutti i diritti sono riservati.
All information contained in this document are property of CARLO GAVAZZI SPACE SpA. All right reserved.

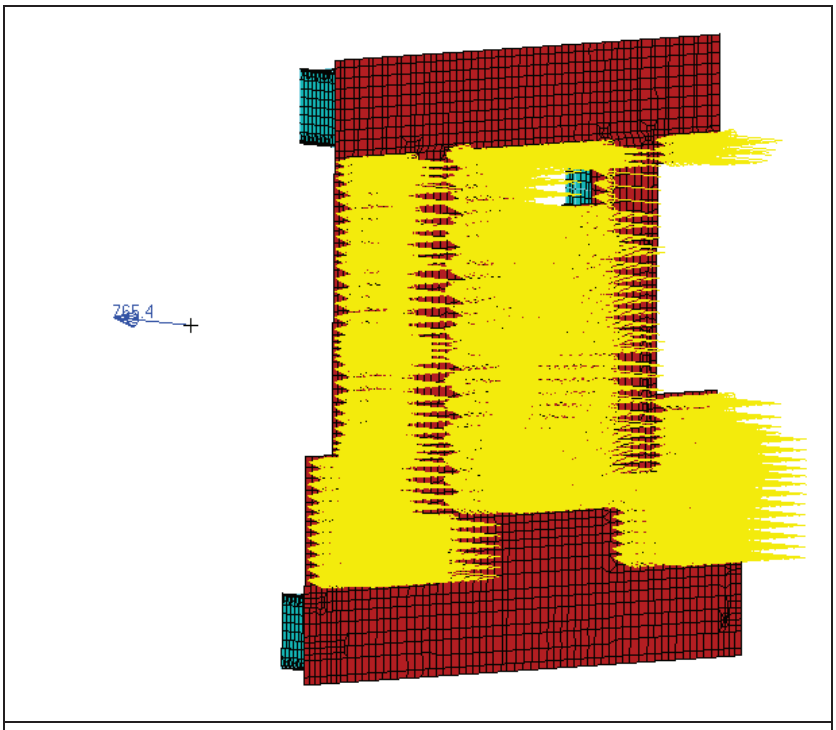

Figure 7-3: Acoustic loads for WAKE Radiator

7.2.3 LOAD CASES SUMMARY

Load Case Summary				
Load Case	**Inertial**	**Enf. Displ.**	**Acoustic**	**Remarks**
1001-1064	Yes	Yes	Yes	Launch config.
2001-2064	Yes	Yes	-	Launch config.

Table 7-5: Applied set of load cases

Questo documento contiene informazioni di proprietà di CARLO GAVAZZI SPACE SpA. Tutti i diritti sono riservati.
All information contained in this document are property of CARLO GAVAZZI SPACE SpA. All right reserved.

8. DIMENSIONING RULES

8.1 SAFETY FACTORS

The PDS system has to show positive MoS applying the following SF:

SAFETY FACTORS	Yield	Ultimate
Metallic structures	1.25	2.0
Non metallic structures	NA	2.0
Fasteners (Nominal)	1.25	2.0
Joint separation	1.2	NA
Joints fitting factor	1.15	1.15
Fasteners (Fail Safe)	NA	1.0

Table 8-1: Safety Factors for structure

8.2 TEMPERATURE DERATING FACTOR

For all the material the temperature degradation factor is considered, as per RD 1 at 60℃ (140℉) (la nding temperature) the worst temperature degradation factor for the material is 6% with respect to the material nominal mechanical strength properties. This temperature degradation factor is applied to all materials.

8.3 MARGINS OF SAFETY FOR STRUCTURE

The MoS is defined as:

$$MoS_Y = \frac{\sigma_y}{SF_Y \cdot \sigma_{Load}} - 1.0$$ for the yield strength, and

$$MoS_U = \frac{\sigma_u}{SF_U \cdot \sigma_{Load}} - 1.0$$ for the ultimate strength, where:

- σ_Y the yield strength of the material,
- σ_U the ultimate strength of the material,
- SF_Y the safety factor for yield strength,
- SF_U the safety factor for ultimate strength,
- σ_{Load} the maximum Von Mises equivalent stress due to external loads.

The MoS for stresses indicates the amount by which the allowable stress, defined by the material characteristics, exceeds the actual stress due to the applied loads, taking into account the applicable SF, defined in Chapter 8.1 .
It is required that MoS are positive for all load cases, for all structural elements.
Additional MoS can be defined to evaluate margins for generic results.

$$\mathrm{MoS} = \frac{\mathrm{A}}{\mathrm{SF} \cdot \mathrm{B}} - 1.0$$

- A allowable
- B actual value
- SF applicable safety factor

It is required that Margins of Safety are positive for all load cases and operative conditions, for all elements.

8.4 FAIL SAFE

For the Joints the fail safe analysis is required: for every joint the critical bolt is supposed to fail.

Questo documento contiene informazioni di proprietà di CARLO GAVAZZI SPACE SpA. Tutti i diritti sono riservati.
All information contained in this document are property of CARLO GAVAZZI SPACE SpA. All right reserved.

9. DYNAMIC ANALYSIS (TEST CONFIGURATION)

In this section, results in terms of frequencies, mode shapes and effective masses are included.

9.1 EIGENFREQUENCIES AND MODE SHAPES

In the following tables, modes with associated mass greater than 5% of the Test Configuration PDS system are shown.

MODE	FREQ [Hz]	% EFFECTIVE MASS		
		X DIR	Y DIR	Z DIR
1	86.8	14.8%	<1%	<1%
23	129.6	6.6%	<1%	<1%
84	223.7	<1%	8.5%	7.9%
87	243.8	1.6%	1.7%	5.1%
219	417.4	<1%	14.3%	5.3%
257	497.9	<1%	10.6%	<1%

Table 9-1: PDS natural frequencies

In the following figures the shapes of the modes with effective mass greater than 5% are presented:

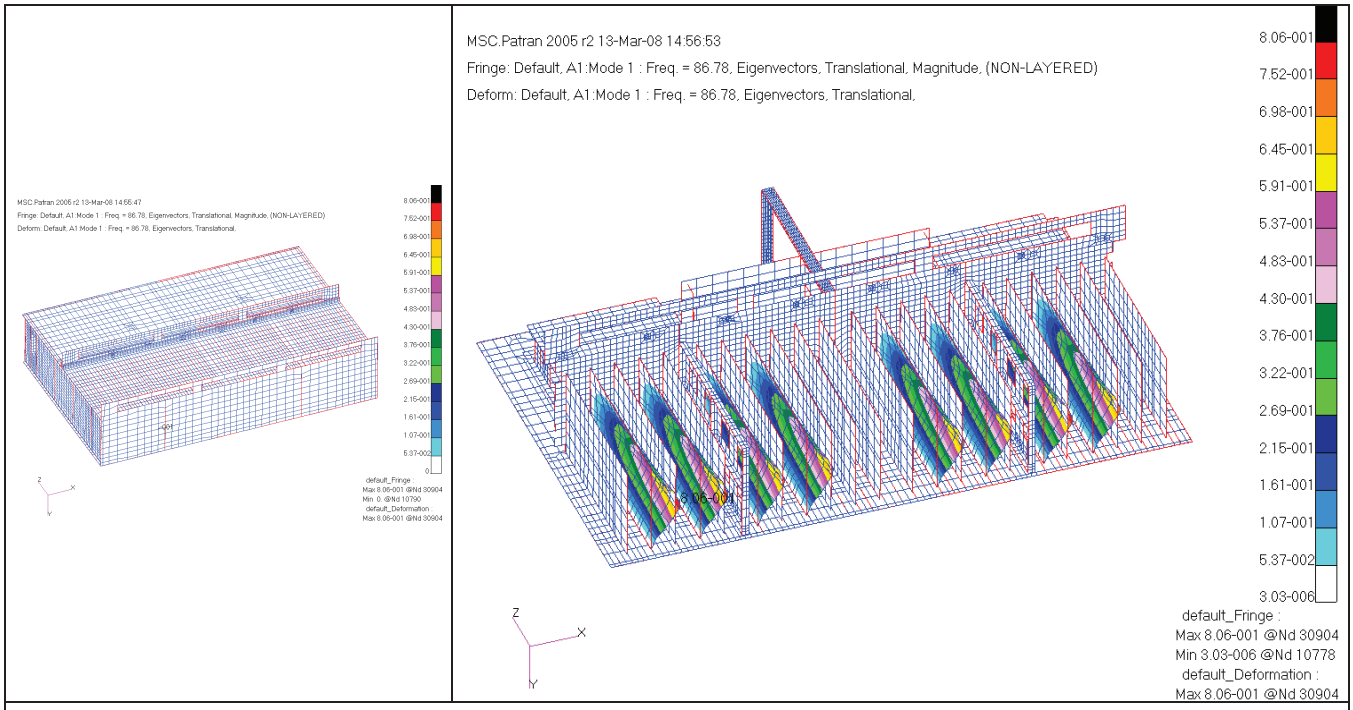

Figure 9-1: Mode 1 at 86.8 Hz, local mode of the boards

Questo documento contiene informazioni di proprietà di CARLO GAVAZZI SPACE SpA. Tutti i diritti sono riservati.
All information contained in this document are property of CARLO GAVAZZI SPACE SpA. All right reserved.

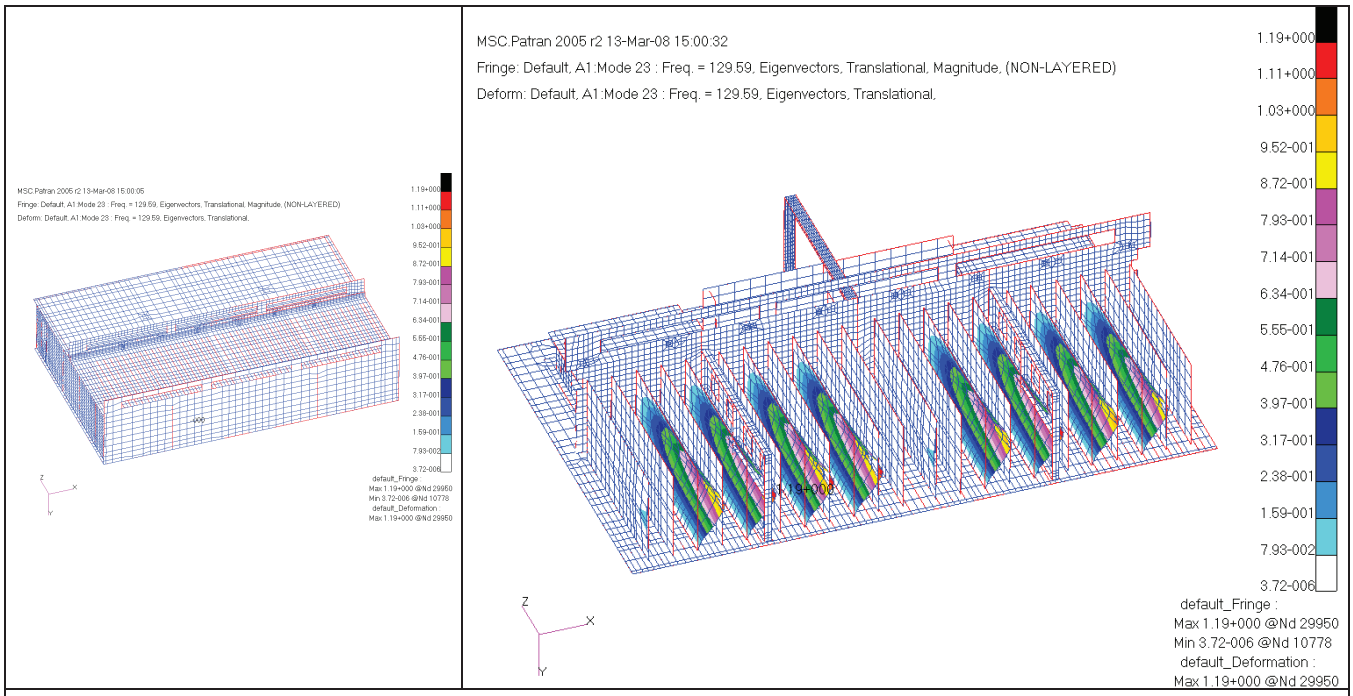

Figure 9-2: Mode 23 at 129.6 Hz, local mode of the boards

\

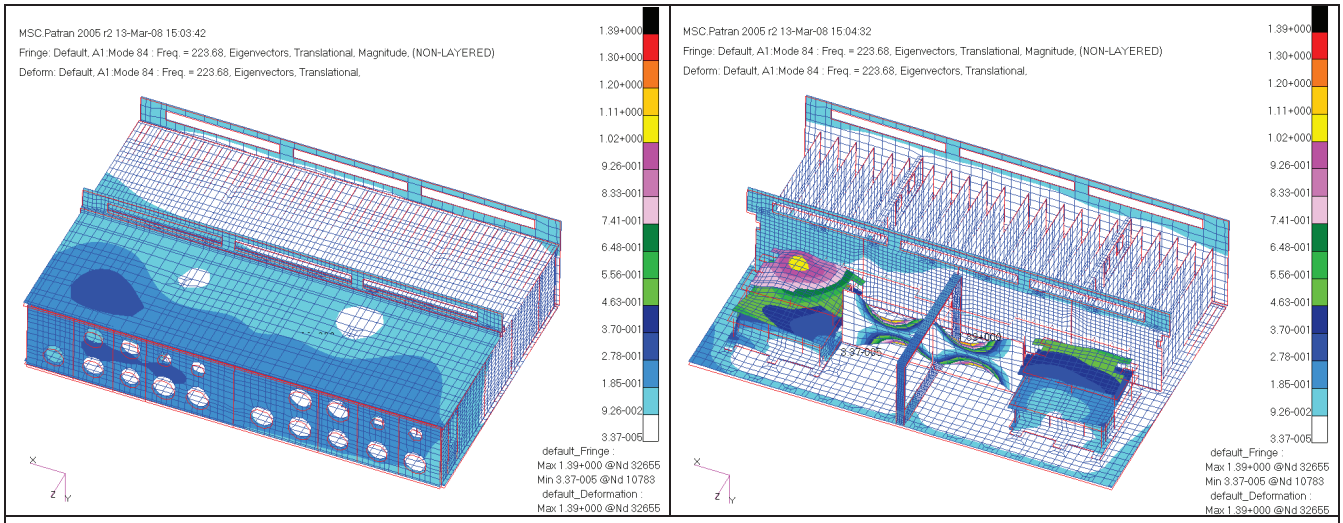

Figure 9-3: Mode 84 at 223.7 Hz

Questo documento contiene informazioni di proprietà di CARLO GAVAZZI SPACE SpA. Tutti i diritti sono riservati.
All information contained in this document are property of CARLO GAVAZZI SPACE SpA. All right reserved.

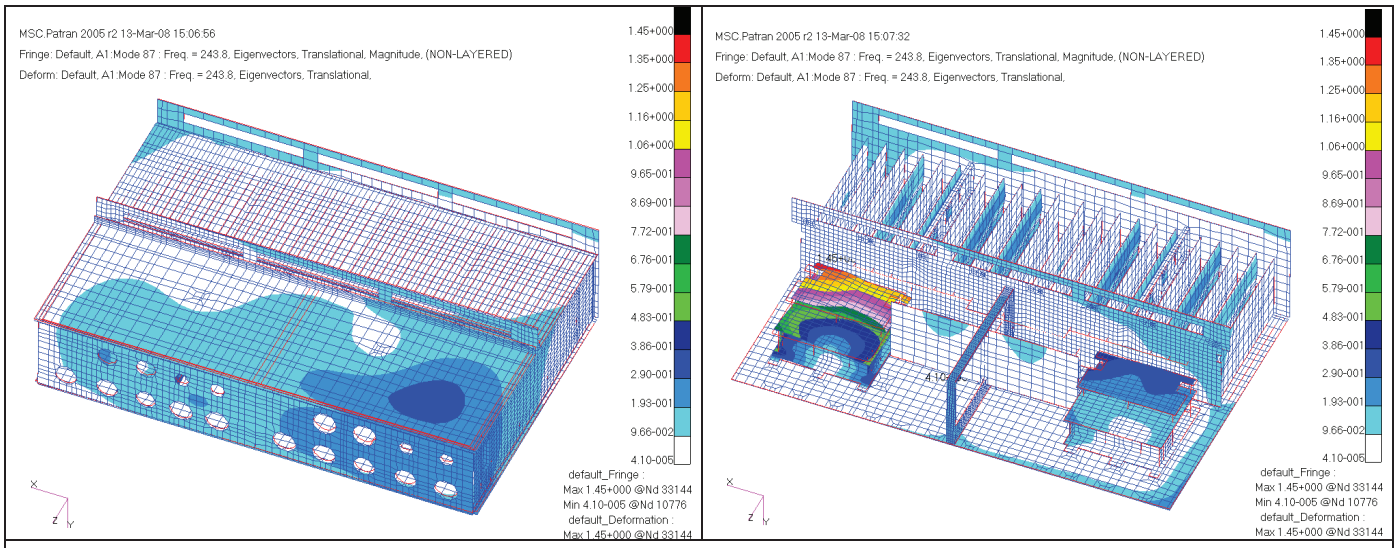

Figure 9-4: Mode 87 at 243.8 Hz

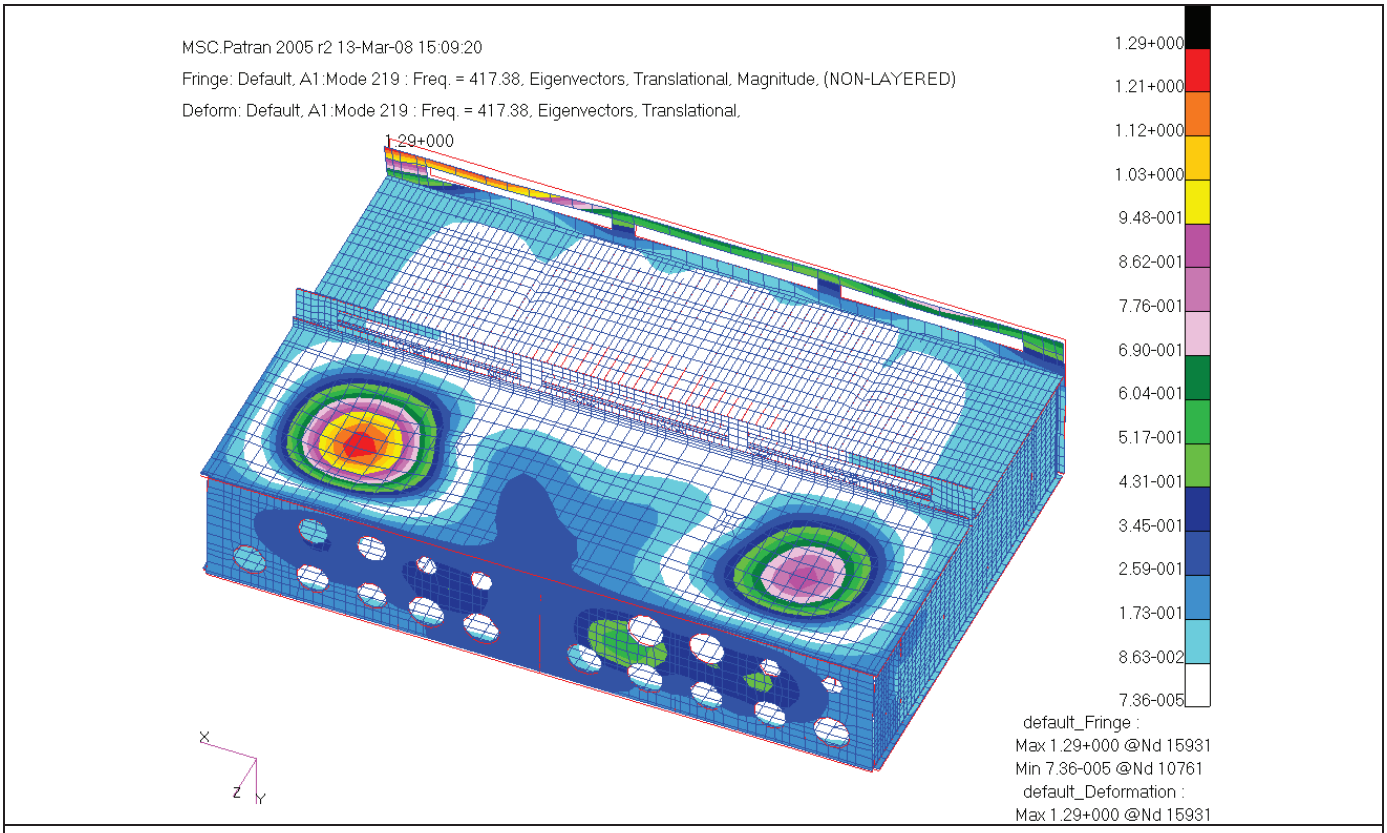

Figure 9-5: Mode 219 at 417.4 Hz

Questo documento contiene informazioni di proprietà di CARLO GAVAZZI SPACE SpA. Tutti i diritti sono riservati.
All information contained in this document are property of CARLO GAVAZZI SPACE SpA. All right reserved.

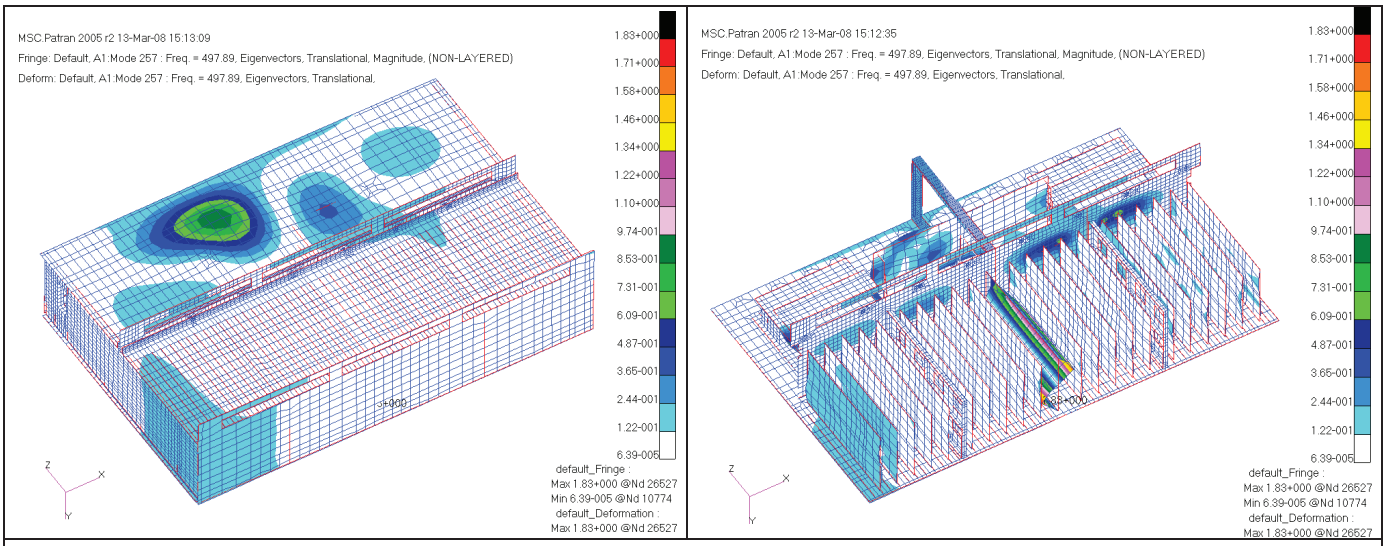

Figure 9-6: Mode 257 at 497.9 Hz

Questo documento contiene informazioni di proprietà di CARLO GAVAZZI SPACE SpA. Tutti i diritti sono riservati.
All information contained in this document are property of CARLO GAVAZZI SPACE SpA. All right reserved.

9.2 EFFECTIVE MASSES

Effective masses are reported in the following figure for modes with effective mass >5%:

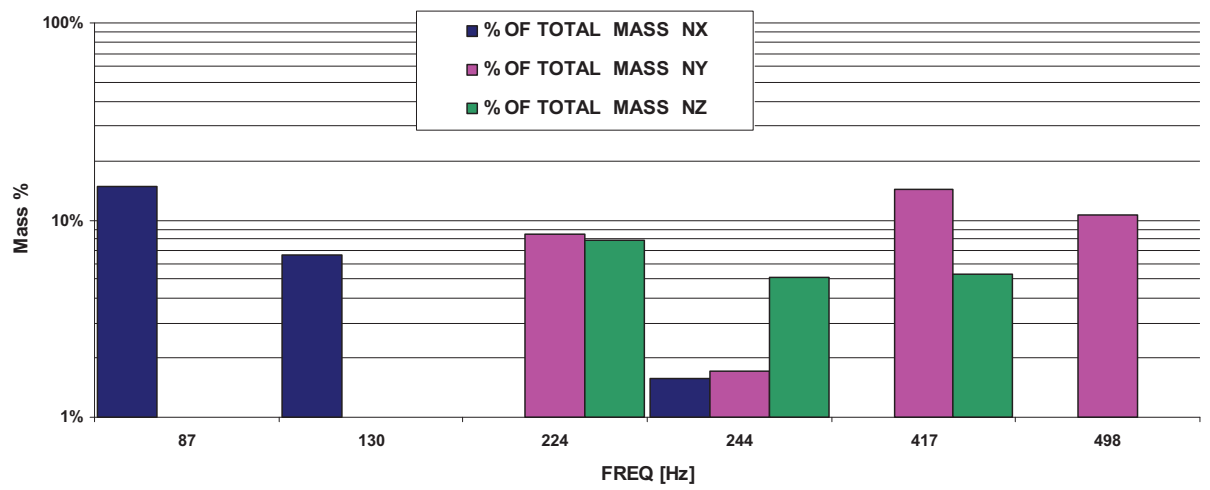

Figure 9-7: Effective masses for all axes

Cumulative effective mass for modes up to 2000Hz is shown:

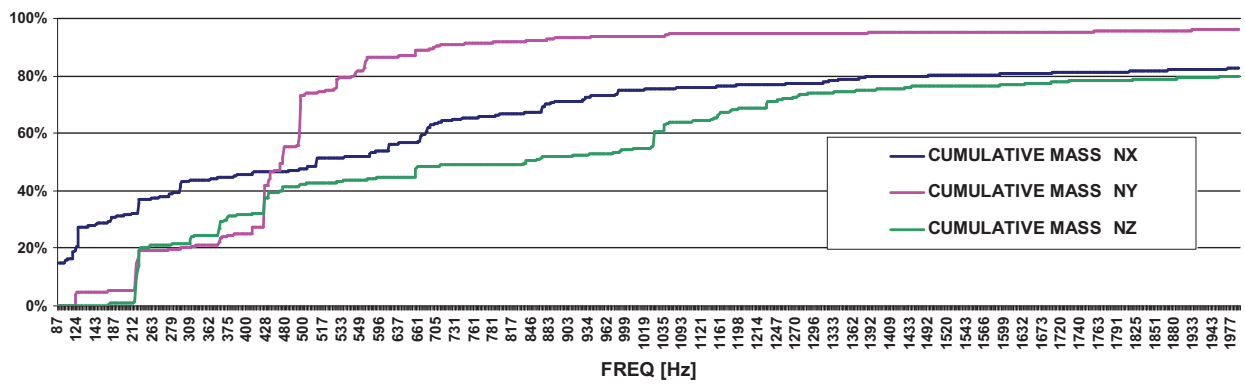

Figure 9-8: Cumulative effective masses for all axes

Questo documento contiene informazioni di proprietà di CARLO GAVAZZI SPACE SpA. Tutti i diritti sono riservati.
All information contained in this document are property of CARLO GAVAZZI SPACE SpA. All right reserved.

10.STATIC ANALYSIS

In the following sections, static analysis results are described for both Flight and Test Configuration.

10.1 TEST CONFIGURATION

Three different types of analysis are performed:

10.1.1 DISPLACEMENT ANALYSIS
10.1.2 STRESS ANALYSIS
10.1.3 JOINT ANALYSIS

10.1.1 DISPLACEMENT ANALYSIS IN TEST CONFIGURATION

The worst condition is for **NODE 31540** for **Load Case 2**.
The resulting displacement is **0.96 mm**.
Following figure shows displacements for this subcase.

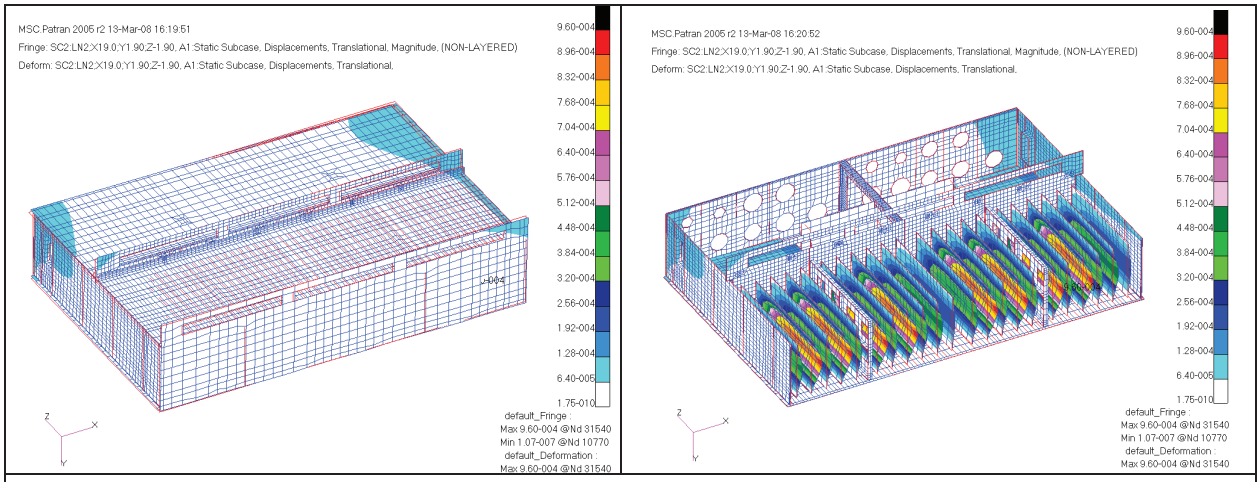

Figure 10-1: Maximum displacement – Load case 2

10.1.2 STRESS ANALYSIS IN TEST CONFIGURATION

For each safety critical item the stress contour and MoS calculation are shown in the next pages.
The assembly is divided in the following items:

10.1.2.1 STRUCTURE
10.1.2.2 ELECTRONICS

Summary of stress analysis results are shown in 10.3.1 MARGINS OF SAFETY IN TEST CONFIGURATION

Questo documento contiene informazioni di proprietà di CARLO GAVAZZI SPACE SpA. Tutti i diritti sono riservati.
All information contained in this document are property of CARLO GAVAZZI SPACE SpA. All right reserved.

10.1.2.1 STRUCTURE

10.1.2.1.1 SHELL MODELED ELEMENTS

The worst condition is for **ELEMENT 24656** for **Load Case 9** at **Layer Z2**.
The resulting Von Mises stress is: **f_{VM} = 72.6 MPa**.
Following figure shows stress distribution for this subcase.

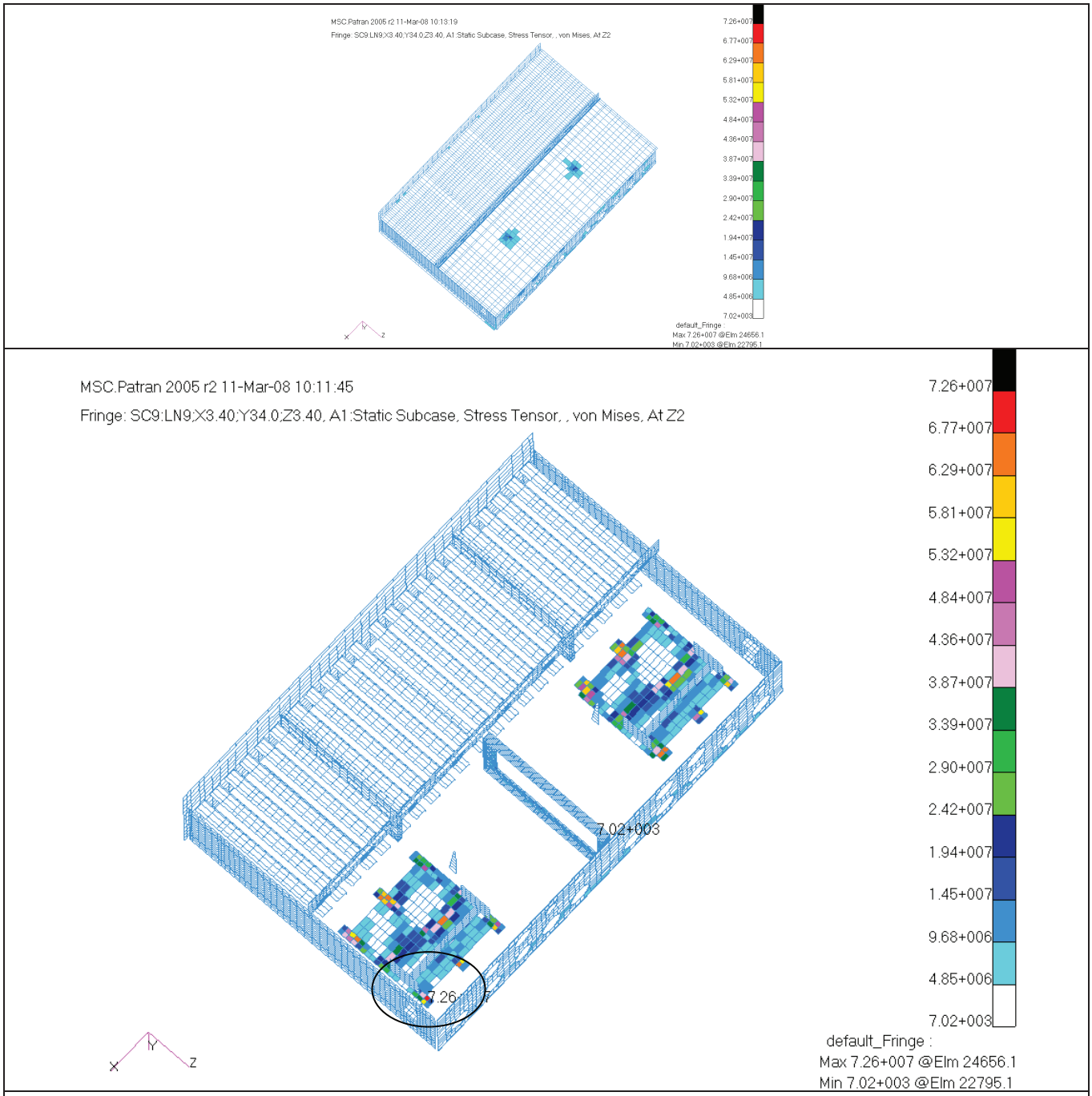

Figure 10-2: Structure shell elements Von Mises stress, Load Case 9, Layer Z2

Questo documento contiene informazioni di proprietà di CARLO GAVAZZI SPACE SpA. Tutti i diritti sono riservati.
All information contained in this document are property of CARLO GAVAZZI SPACE SpA. All right reserved.

10.1.2.1.2 BEAM MODELED ELEMENTS

The worst condition is for **ELEMENT 10693** for **Load Case 9**.
The resulting Max Combined stress is: **f_{MC} = 52.2 MPa**.
Following figure shows stress distribution for this subcase.

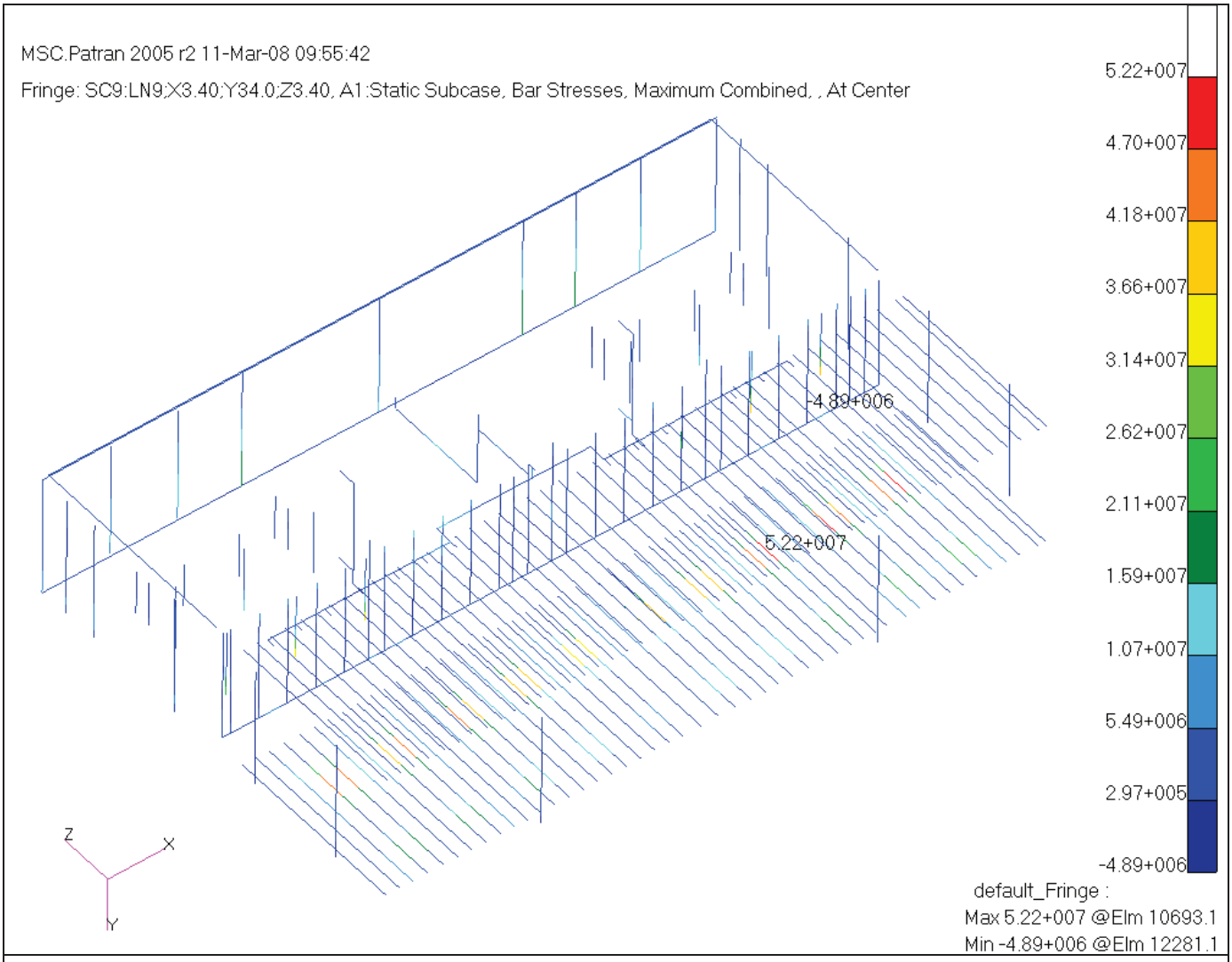

Figure 10-3: Structure beam elements Maximum Combined stress, Load Case 9

Questo documento contiene informazioni di proprietà di CARLO GAVAZZI SPACE SpA. Tutti i diritti sono riservati.
All information contained in this document are property of CARLO GAVAZZI SPACE SpA. All right reserved.

10.1.2.2 ELECTRONICS

The worst condition is for **ELEMENT 24890** for **Load Case 11** at **Layer Z1**.
The resulting Von Mises stress is: **f_{VM} = 13.4 MPa**.
Following figures show stress distribution for this subcase.

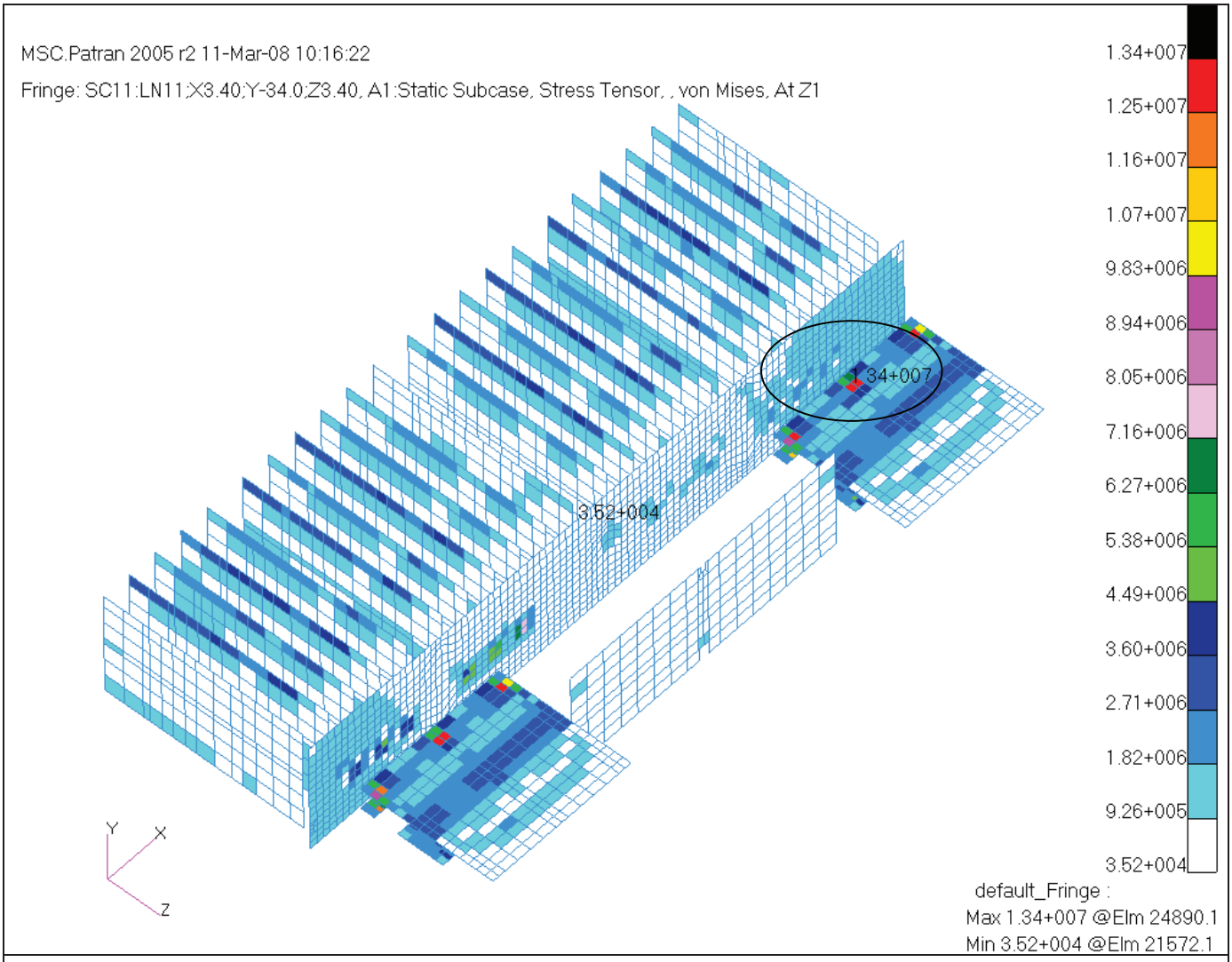

Figure 10-4: Electronics Von Mises stress, Load Case 11, Layer Z1

Questo documento contiene informazioni di proprietà di CARLO GAVAZZI SPACE SpA. Tutti i diritti sono riservati.
All information contained in this document are property of CARLO GAVAZZI SPACE SpA. All right reserved.

10.1.3 JOINT ANALYSIS IN TEST CONFIGURATION

The analysis of the joints shall be divided in five different kinds of connections:

JOINT #	DESCRIPTION	MATERIAL	BOLT TYPE				ANALYSIS PAGE
			NAME	DIAM.	PICH	LENGHT	
JOINT 1	INTERFACE	A286 160Ksi	NAS 1351N3-8	0.19 inch	32 pitch/inch	1/2	47
JOINT 2	BOX WALLS	A286 160Ksi	NAS 1352N08	0.164 inch	32 pitch/inch	3/8; 1/2; 5/8; 3/4	50
JOINT 3	BOX WALLS	AISI 304	MS24671-14	0.164 inch	32 pitch/inch	1/2	53
JOINT 4	BOX WALLS	A286 160Ksi	NAS1351N3	0.19 inch	32 pitch/inch	1/2; 5/8	56
JOINT 5	LINKS	A286 160Ksi	NAS 1351N3-8	0.19 inch	32 pitch/inch	1/2	NA

Table 10-1: Joint description

The joint 5 in test configuration is not present so it is not verified.

Summary of joint analysis results are shown in 10.4.1 MOS SUMMARY FOR JOINTS IN TEST CONFIGURATION.

The value of Fsy is evaluated according to RD. 1, par. 1.4.6.5.

For each joint, bolts with maximum axial force, maximum shear force and maximum combined forces are verified.
The lower margins of safety for each joint are included in joint analysis table and are shown in the list below.
An analysis example is shown in ANNEX A.

The MoS definition for bolt analysis is reported in the following table:

MOS	DESCRIPTION
MS_1	JOINT SEPARATION
MS_2	DIRECT TENSION ULTIMATE
MS_3	DIRECT TENSION YIELD
MS_4	TOTAL TENSION ULTIMATE
MS_5	TOTAL TENSION YIELD
MS_6	DIRECT THREAD SHEAR ULTIMATE
MS_7	TOTAL THREAD SHEAR ULTIMATE
MS_8	SHEAR ULTIMATE
MS_9	BENDING ULTIMATE
MS_{10}	COMBINED SHEAR, TENSION AND BENDING ULTIMATE

Table 10-2: MoS definition for bolt analysis

The fail safe analysis is performed for each joint and the failure of bolt with lower MS_{10} is considered. Fail safe is reported after each nominal analysis and summarized in Chapter 10.4.1.2 .

Questo documento contiene informazioni di proprietà di CARLO GAVAZZI SPACE SpA. Tutti i diritti sono riservati.
All information contained in this document are property of CARLO GAVAZZI SPACE SpA. All right reserved.

10.1.3.1 JOINT 1

In the following figure positions of the bolts for the Joint 1are shown:

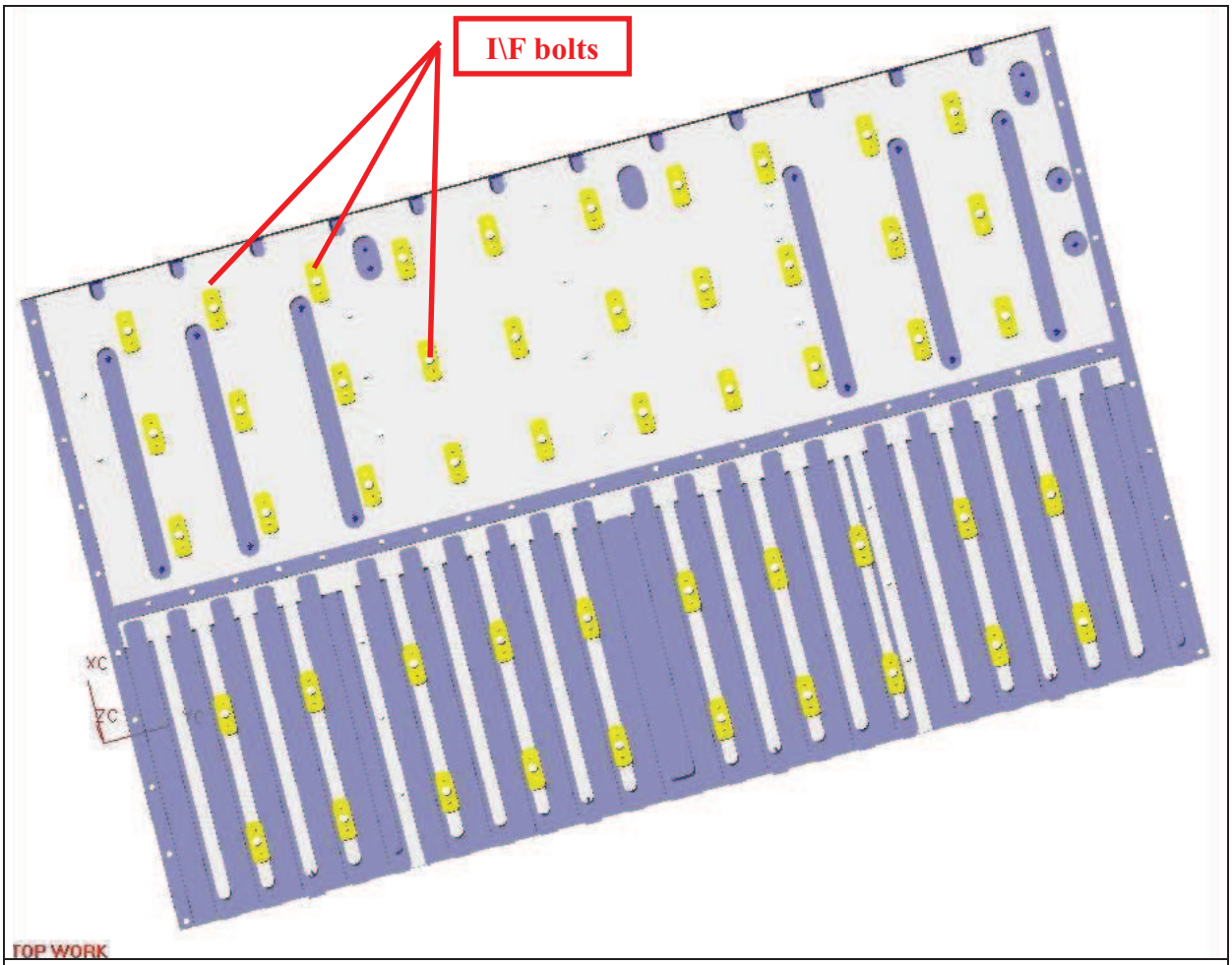

Figure 10-5: Joint 1 Interface joints

Questo documento contiene informazioni di proprietà di CARLO GAVAZZI SPACE SpA. Tutti i diritti sono riservati.
All information contained in this document are property of CARLO GAVAZZI SPACE SpA. All right reserved.

In the following figures the forces applied to the joint are shown:

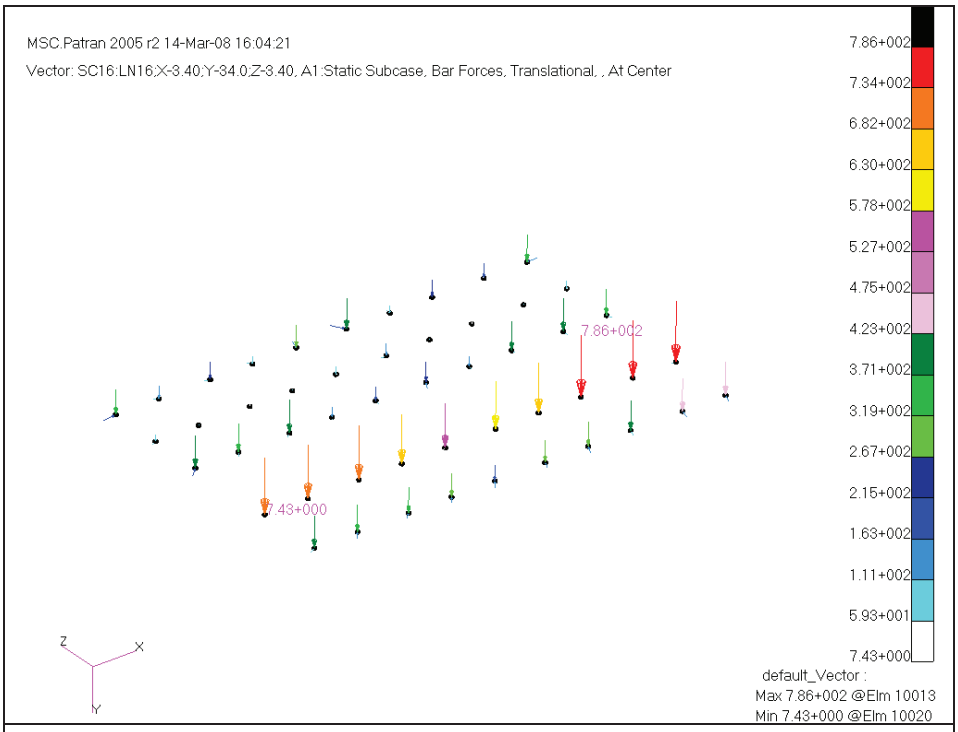

Figure 10-6: Joint 1 critical axial case (test)

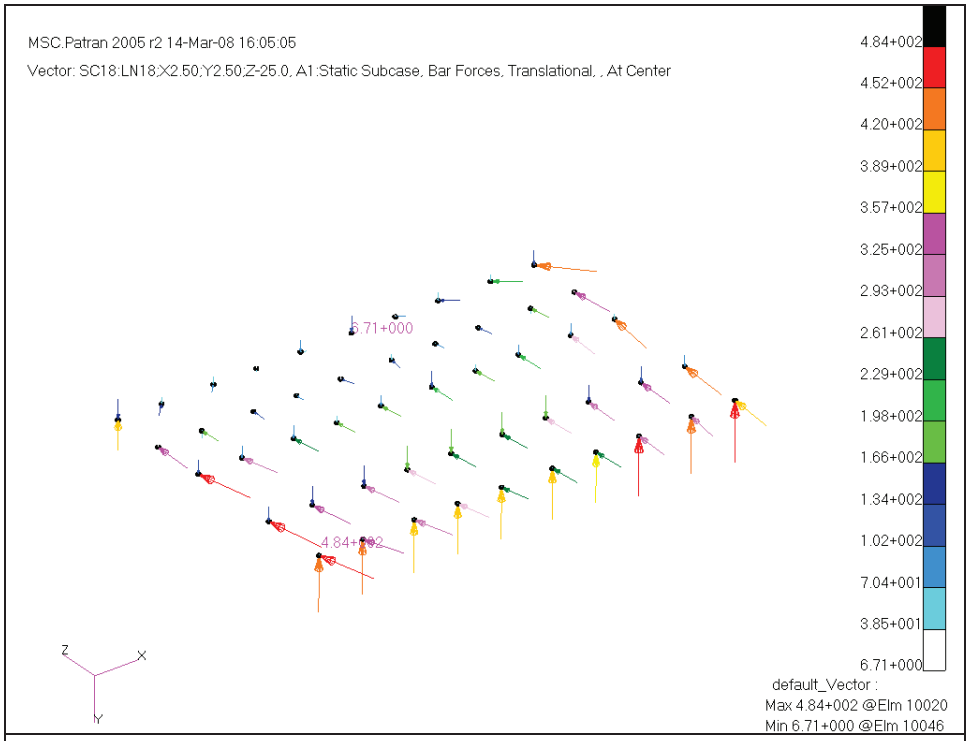

Figure 10-7: Joint 1 critical shear case (test)

Questo documento contiene informazioni di proprietà di CARLO GAVAZZI SPACE SpA. Tutti i diritti sono riservati.
All information contained in this document are property of CARLO GAVAZZI SPACE SpA. All right reserved.

JUNCTION PROPERTIES	
BOLT	NAS1351N3
WASHER 1	NA
WASHER 2	NA
NUT	MS21060L3
INSERT	NA
INSERT IN FLANGE	2
NUMBER OF FLANGES	2
LUBRICATED	YES
FLANGE 1 NAME	INSERT TYPE B
FLANGE 1 MATERIAL	AL7075 T7351
FLANGE 1 MATERIAL SPEC	AMS-QQ-A-225/9
FLANGE 1 THICKNESS [in]	NA
FLANGE 1 HOLE DIAMETER [in]	0.21
FLANGE 2 NAME	BASEPLATE
FLANGE 2 MATERIAL	AL7075 T7351
FLANGE 2 MATERIAL SPEC	AMS-QQ-A-250/12
FLANGE 2 THICKNESS [in]	0.118
FLANGE 2 HOLE DIAMETER [in]	0.21

LOADS	
MAX AXIAL - CONFIGURATION ID	NOMINAL
MAX AXIAL - ELEMENT ID	10013
MAX AXIAL - LOAD CASE ID	16
MAX AXIAL - AXIAL LOAD [lb]	176.8
max axial - axial load [N]	786.0
MAX AXIAL - SHEAR LOAD [lb]	13.7
max axial - shear load [N]	60.7
MAX SHEAR - CONFIGURATION ID	NOMINAL
MAX SHEAR - ELEMENT ID	10020
MAX SHEAR - LOAD CASE ID	18
MAX SHEAR - AXIAL LOAD [lb]	25.1
max shear - axial load [N]	111.3
MAX SHEAR - SHEAR LOAD [lb]	108.9
max shear - shear load [N]	484.1
MAX COMBINED - CONFIGURATION ID	NOMINAL
MAX COMBINED - ELEMENT ID	SAME AS MAX AXIAL
MAX COMBINED - LOAD CASE ID	
MAX COMBINED - AXIAL LOAD [lb]	
max combined - axial load [N]	
MAX COMBINED - SHEAR LOAD [lb]	
max combined - shear load [N]	

FACTORS OF SAFETY	
ULTIMATE (for nominal configuration)	2.0
ULTIMATE (for fail safe configuration)	1.0
YIELD (only for nominal configuration)	1.25
JOINT SEPARATION (for nominal configuration)	1.2
JOINT SEPARATION (for fail safe configuration)	1.0
FITTING FACTOR	1.15

BOLT & INSERT DATA	
NOMINAL DIAMETER OF BOLT [in]	0.19
NUMBER OF THREADS/INCH [1/in]	32
TOTAL LENGHT OF BOLT [in]	0.5
LENGHT OF INSERT [in]	NA
THREADED LENGHT [in]	0.5
MIN EXT DIAMETER OF INSERT [in]	NA
DEPTH OF RECESS FOR INSERT [in]	NA
HEIGHT OF NUT [in]	0.25

WASHER DATA	
THICKNESS OF WASHER [in]	NA
OUTER DIAMETER OF WASHER [in]	NA
INNER DIAMETER OF WASHER [in]	NA
BOLT HEAD DIAMETER [in]	NA

FLANGE DATA	
THICK OF FLANGE 1 [in]	NA
THICK OF FLANGE 2 [in]	0.118
DIAMETER OF HOLE [in]	0.21

BOLT MATERIAL PROPERTY DATA	
TEMP FACTOR FOR ULTIMATE STRENGHT	0.94
TEMP FACTOR FOR YIELD STRENGHT	0.94
ULTIMATE TENSILE ALLOWABLE STRESS [ksi]	160
YIELD TENSILE ALLOWABLE STRESS [ksi]	110
TEMP FACTOR FOR MODULUS	0.94
MODULUS OF ELASTICITY [ksi]	29100
THERMAL COEFF - HOT [1E(-6)/deg]	9.1
THERMAL COEFF - COLD [1E(-6)/deg]	7.8

INSERT MATERIAL PROPERTY DATA	
TEMP FACTOR FOR ULTIMATE STRENGHT	0.94
ULTIMATE TENSILE ALLOWABLE STRESS [ksi]	NA

NUT MATERIAL PROPERTY DATA	
TEMP FACTOR FOR ULTIMATE STRENGHT	0.94
TENSILE ULTIMATE ALLOWABLE STRESS [psi]	125000
ULTIMATE AXIAL LOAD [lb]	6470

WASHER MATERIAL PROPERTY DATA	
TEMP FACTOR FOR MODULUS	1
MODULUS OF ELASTICITY [ksi]	29100

FLANGE MATERIAL PROPERTY DATA	
TEMP FACTOR FOR MODULUS OF FLANGE 1	0.94
TEMP FACTOR FOR MODULUS OF FLANGE 2	0.94
TEMP FACTOR FOR ULTIMATE STRENGHT OF FLANGE 2	0.94
ULTIMATE SHEAR ALLOWABLE STRESS OF FLANGE 2 [psi]	NA
MODULUS OF ELASTICITY FOR FLANGE 1 [ksi]	10500
MODULUS OF ELASTICITY FOR FLANGE 2 [ksi]	10500
THERMAL COEFF OF FLANGE 1 - HOT [1E(-6)/deg]	12.15
THERMAL COEFF OF FLANGE 1 - COLD [1E(-6)/deg]	11.15
THERMAL COEFF OF FLANGE 2 - HOT [1E(-6)/deg]	12.15
THERMAL COEFF OF FLANGE 2 - COLD [1E(-6)/deg]	11.15
ULTIMATE BEARING ALLOWABLE STRESS FOR FLANGE 1 [psi]	NA
YIELD BEARING ALLOWABLE STRESS FOR FLANGE 1 [psi]	NA
ULTIMATE BEARING ALLOWABLE STRESS FOR FLANGE 2 [psi]	95870
YIELD BEARING ALLOWABLE STRESS FOR FLANGE 2 [psi]	74260

TORQUE AND PRELOAD DATA	
MAX TORQUE [lb in]	28.0
max torque [N m]	3.2
MIN TORQUE [lb in]	26.0
min torque [N m]	2.9
COEFFICIENT OF UTILIZATION [%]	64
LOADING PLANE FACTOR	0.5
PRELOAD UNCETRAINTY	0.25
TORQUE COEFFICIENT	0.15

NOMINAL CONFIGURATION SUMMARY OF MARGINS FOR BOLTS	
MOS CALCULATION - CONFIGURATION ID	NOMINAL
JOINT SEPARATION	2.1 (MAX AXIAL)
DIRECT TENSION ULTIMATE	6.12 (MAX AXIAL)
DIRECT TENSION YIELD	6.83 (MAX AXIAL)
TOTAL TENSION ULTIMATE	1.12 (MAX AXIAL)
TOTAL TENSION YIELD	0.49 (MAX AXIAL)
DIRECT THREAD SHEAR ULTIMATE	7.54 (MAX AXIAL)
TOTAL THREAD SHEAR ULTIMATE	1.54 (MAX AXIAL)
SHEAR ULTIMATE	5.32 (MAX SHEAR)
BENDING ULTIMATE	> 10
COMBINED SHEAR, TENSION AND BENDING ULTIMATE	1.12 (MAX AXIAL)
NOMINAL CONFIGURATION MINIMUM MOS	0.49
NOMINAL CONFIGURATION MINIMUM ULTIMATE MOS	1.12

NOMINAL CONFIGURATION SUMMARY OF MARGINS FOR BEARING FLANGES	
FLANGE 1 - BEARING ULTIMATE	NA
FLANGE 1 - BEARING YIELD	
FLANGE 2 - BEARING ULTIMATE	8.48
FLANGE 2 - BEARING YIELD	>10
NOMINAL CONFIGURATION MINIMUM MOS	8.48 (ULT-FL 2)

FAIL SAFE CONFIGURATION IDENTIFICATION	
FAIL SAFE FAILED BOLT CONFIGURATION	TEST FAIL SAFE
FAIL SAFE 1 FAILED BOLT ID	10013

FAIL SAFE CONFIGURATION BOLT LOADS	
MAX AXIAL - ELEMENT ID	10011
MAX AXIAL - LOAD CASE ID	16
MAX AXIAL - AXIAL LOAD [lb]	182.8
max axial - axial load [N]	812.9
MAX AXIAL - SHEAR LOAD [lb]	13.8
max axial - shear load [N]	61.3
MAX SHEAR - ELEMENT ID	10020
MAX SHEAR - LOAD CASE ID	18
MAX SHEAR - AXIAL LOAD [lb]	25.1
max shear - axial load [N]	111.3
MAX SHEAR - SHEAR LOAD [lb]	109.1
max shear - shear load [N]	485.2
MAX COMBINED - LOAD CASE ID	SAME AS MAX AXIAL
MAX COMBINED - AXIAL LOAD [lb]	
max combined - axial load [N]	
MAX COMBINED - SHEAR LOAD [lb]	
max combined - shear load [N]	

FAIL SAFE CONFIGURATION SUMMARY OF MARGINS FOR BOLTS	
MOS CALCULATION - CONFIGURATION ID	TEST FAIL SAFE
JOINT SEPARATION	2.6 (MAX AXIAL)
DIRECT TENSION ULTIMATE	12.77 (MAX AXIAL)
TOTAL TENSION ULTIMATE	1.19 (MAX AXIAL)
DIRECT THREAD SHEAR ULTIMATE	15.53 (MAX AXIAL)
TOTAL THREAD SHEAR ULTIMATE	1.63 (MAX AXIAL)
SHEAR ULTIMATE	11.61 (MAX SHEAR)
BENDING ULTIMATE	> 10
COMBINED SHEAR, TENSION AND BENDING ULTIMATE	1.19 (MAX AXIAL)
FAIL SAFE CONFIGURATION MINIMUM ULTIMATE MOS	1.19

FAIL SAFE CONFIGURATION SUMMARY OF MARGINS FOR BEARING FLANGES	
FLANGE 1 - BEARING ULTIMATE	NA
FLANGE 2 - BEARING ULTIMATE	>10
FAIL SAFE CONFIGURATION MINIMUM MOS	>10

Table 10-3: Joint 1 nominal and fail safe analyses (test)

Questo documento contiene informazioni di proprietà di CARLO GAVAZZI SPACE SpA. Tutti i diritti sono riservati.
All information contained in this document are property of CARLO GAVAZZI SPACE SpA. All right reserved.

10.1.3.2 JOINT 2

In the following figure positions of the bolts for the Joint 2 are shown:

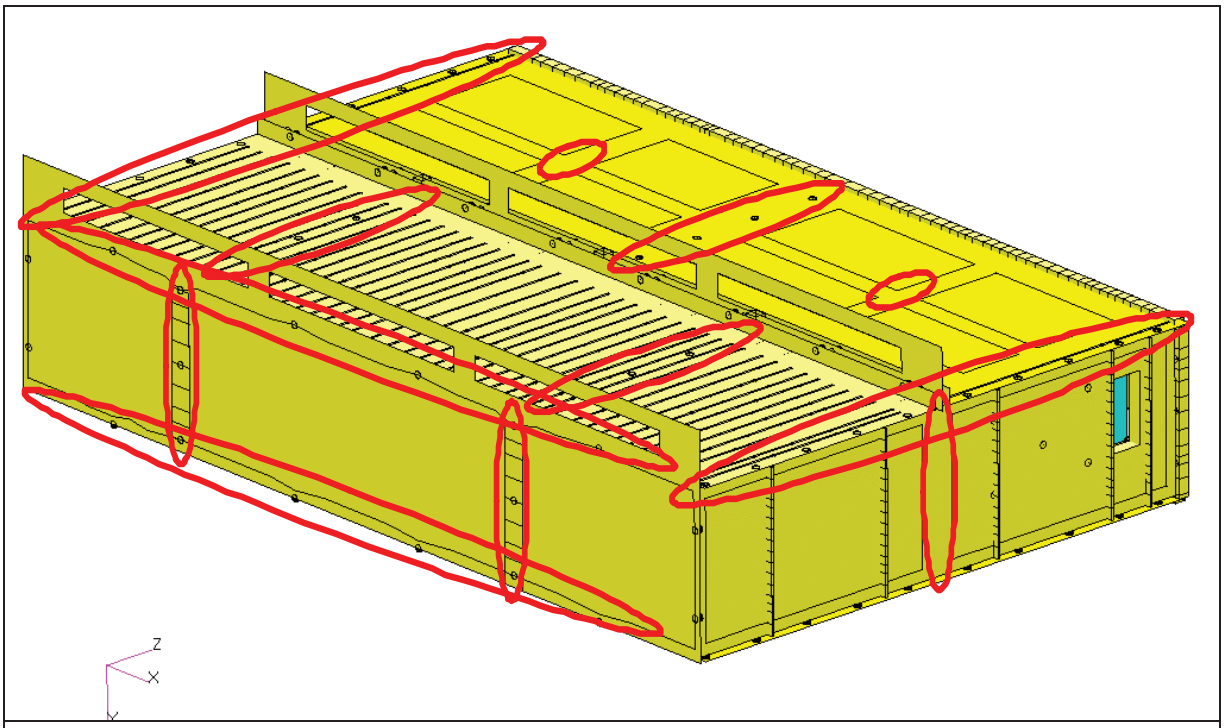

Figure 10-8: Joint 2

Questo documento contiene informazioni di proprietà di CARLO GAVAZZI SPACE SpA. Tutti i diritti sono riservati.
All information contained in this document are property of CARLO GAVAZZI SPACE SpA. All right reserved.

In the following figures the forces applied to the joint are shown:

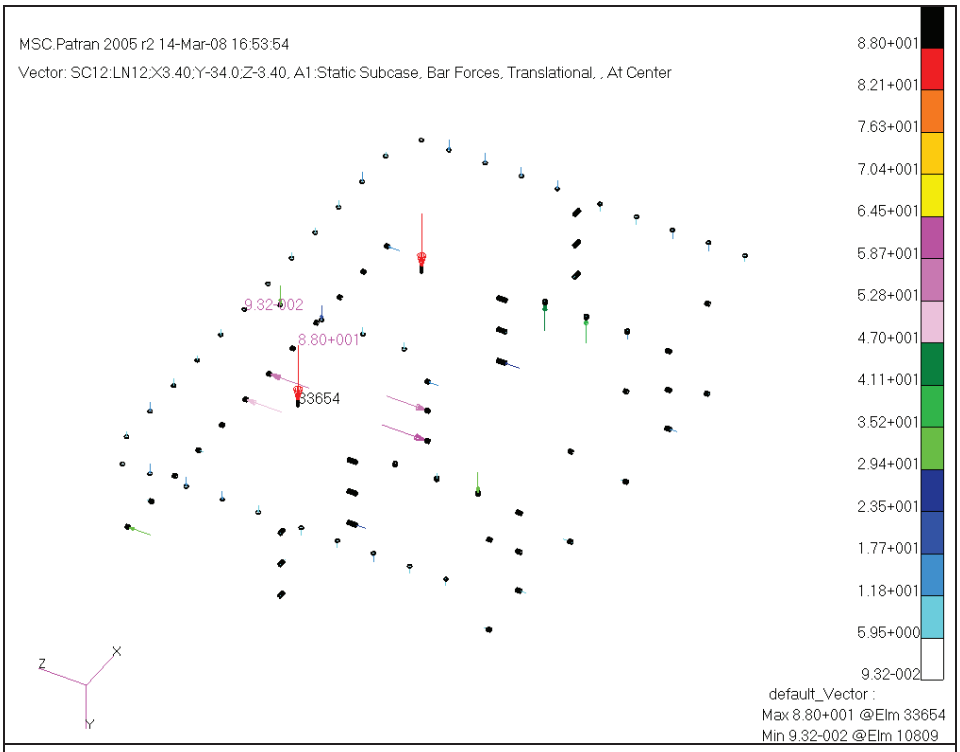

Figure 10-9: Joint 2 critical axial case (test)

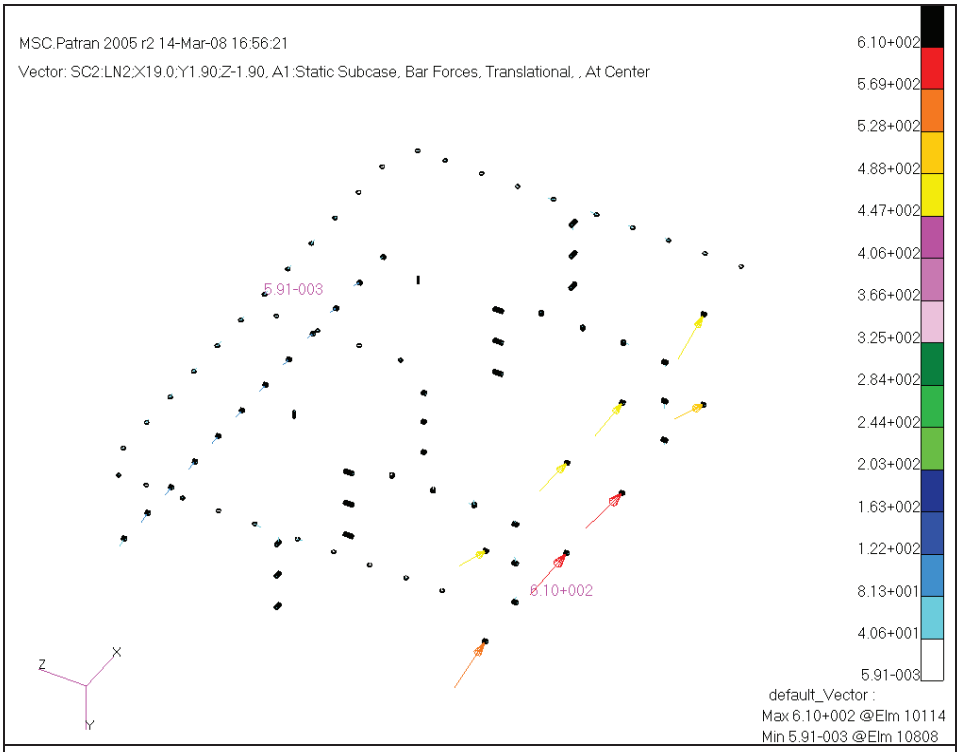

Figure 10-10: Joint 2 critical shear case (test)

Questo documento contiene informazioni di proprietà di CARLO GAVAZZI SPACE SpA. Tutti i diritti sono riservati.
All information contained in this document are property of CARLO GAVAZZI SPACE SpA. All right reserved.

JUNCTION PROPERTIES	
BOLT	NAS1352N08
WASHER 1	NAS620 C08
WASHER 2	NA
NUT	NA
INSERT	MS21209 C08-10
INSERT IN FLANGE	2
NUMBER OF FLANGES	2
LUBRICATED	NO
FLANGE 1 NAME	PDS WALLS
FLANGE 1 MATERIAL	Al7075T7351
FLANGE 1 MATERIAL SPEC	AMS-QQ-A-250/12
FLANGE 1 THICKNESS [in]	0.138
FLANGE 1 HOLE DIAMETER [in]	0.18
FLANGE 2 NAME	PDS WALLS
FLANGE 2 MATERIAL	Al7075T7351
FLANGE 2 MATERIAL SPEC	AMS-QQ-A-250/12
FLANGE 2 THICKNESS [in]	0.246
FLANGE 2 HOLE DIAMETER [in]	0.18

LOADS	
MAX AXIAL - CONFIGURATION ID	NOMINAL
MAX AXIAL - ELEMENT ID	33654
MAX AXIAL - LOAD CASE ID	12
MAX AXIAL - AXIAL LOAD [lb]	19.8
max axial - axial load [N]	88.0
MAX AXIAL - SHEAR LOAD [lb]	5.7
max axial - shear load [N]	25.1
MAX SHEAR - CONFIGURATION ID	NOMINAL
MAX SHEAR - ELEMENT ID	10114
MAX SHEAR - LOAD CASE ID	2
MAX SHEAR - AXIAL LOAD [lb]	4.2
max shear - axial load [N]	18.3
MAX SHEAR - SHEAR LOAD [lb]	137.1
max shear - shear load [N]	609.6
MAX COMBINED - CONFIGURATION ID	NOMINAL
MAX COMBINED - ELEMENT ID	SAME AS MAX SHEAR
MAX COMBINED - LOAD CASE ID	
MAX COMBINED - AXIAL LOAD [lb]	
max combined - axial load [N]	
MAX COMBINED - SHEAR LOAD [lb]	
max combined - shear load [N]	

FACTORS OF SAFETY	
ULTIMATE (for nominal configuration)	2.0
ULTIMATE (for fail safe configuration)	1.0
YIELD (only for nominal configuration)	1.25
JOINT SEPARATION (for nominal configuration)	1.2
JOINT SEPARATION (for fail safe configuration)	1.0
FITTING FACTOR	1.15

BOLT & INSERT DATA	
NOMINAL DIAMETER OF BOLT [in]	0.164
NUMBER OF THREADS/INCH [1/in]	32
TOTAL LENGHT OF BOLT [in]	0.5
LENGHT OF INSERT [in]	0.246
THREADED LENGHT [in]	0.5
MIN EXT DIAMETER OF INSERT [in]	0.205
DEPTH OF RECESS FOR INSERT [in]	0.02
HEIGHT OF NUT [in]	NA

WASHER DATA	
THICKNESS OF WASHER [in]	0.032
OUTER DIAMETER OF WASHER [in]	0.304
INNER DIAMETER OF WASHER [in]	0.169
BOLT HEAD DIAMETER [in]	0.27

FLANGE DATA	
THICK OF FLANGE 1 [in]	0.138
THICK OF FLANGE 2 [in]	0.246
DIAMETER OF HOLE [in]	0.18

BOLT MATERIAL PROPERTY DATA	
TEMP FACTOR FOR ULTIMATE STRENGHT	0.94
TEMP FACTOR FOR YIELD STRENGHT	0.94
ULTIMATE TENSILE ALLOWABLE STRESS [ksi]	160
YIELD TENSILE ALLOWABLE STRESS [ksi]	110
TEMP FACTOR FOR MODULUS	0.94
MODULUS OF ELASTICITY [ksi]	29100
THERMAL COEFF - HOT [1E(-6)/deg]	9.1
THERMAL COEFF - COLD [1E(-6)/deg]	7.8

INSERT MATERIAL PROPERTY DATA	
TEMP FACTOR FOR ULTIMATE STRENGHT	0.94
ULTIMATE TENSILE ALLOWABLE STRESS [ksi]	150

NUT MATERIAL PROPERTY DATA	
TEMP FACTOR FOR ULTIMATE STRENGHT	NA
TENSILE ULTIMATE ALLOWABLE STRESS [psi]	NA
ULTIMATE AXIAL LOAD [lb]	NA

WASHER MATERIAL PROPERTY DATA	
TEMP FACTOR FOR MODULUS	1
MODULUS OF ELASTICITY [ksi]	29100

FLANGE MATERIAL PROPERTY DATA	
TEMP FACTOR FOR MODULUS OF FLANGE 1	0.94
TEMP FACTOR FOR MODULUS OF FLANGE 2	0.94
TEMP FACTOR FOR ULTIMATE STRENGHT OF FLANGE 2	0.94
ULTIMATE SHEAR ALLOWABLE STRESS OF FLANGE 2 [psi]	27000
MODULUS OF ELASTICITY FOR FLANGE 1 [ksi]	10500
MODULUS OF ELASTICITY FOR FLANGE 2 [ksi]	10500
THERMAL COEFF OF FLANGE 1 - HOT [1E(-6)/deg]	12.15
THERMAL COEFF OF FLANGE 1 - COLD [1E(-6)/deg]	11.5
THERMAL COEFF OF FLANGE 2 - HOT [1E(-6)/deg]	12.15
THERMAL COEFF OF FLANGE 2 - COLD [1E(-6)/deg]	11.5
ULTIMATE BEARING ALLOWABLE STRESS FOR FLANGE 1 [psi]	95870
YIELD BEARING ALLOWABLE STRESS FOR FLANGE 1 [psi]	74260
ULTIMATE BEARING ALLOWABLE STRESS FOR FLANGE 2 [psi]	95870
YIELD BEARING ALLOWABLE STRESS FOR FLANGE 2 [psi]	74260

TORQUE AND PRELOAD DATA	
MAX TORQUE [lb in]	20.0
max torque [N m]	2.3
MIN TORQUE [lb in]	18.0
min torque [N m]	2.0
COEFFICIENT OF UTILIZATION [%]	63
LOADING PLANE FACTOR	0.5
PRELOAD UNCETRAINTY	0.35
TORQUE COEFFICIENT	0.2

NOMINAL CONFIGURATION SUMMARY OF MARGINS FOR BOLTS	
MOS CALCULATION - CONFIGURATION ID	NOMINAL
JOINT SEPARATION	10.55 (MAX AXIAL)
DIRECT TENSION ULTIMATE	43.21 (MAX AXIAL)
DIRECT TENSION YIELD	47.63 (MAX AXIAL)
TOTAL TENSION ULTIMATE	1.27 (MAX AXIAL)
TOTAL TENSION YIELD	0.568 (MAX AXIAL)
DIRECT THREAD SHEAR ULTIMATE	41.74 (MAX AXIAL)
TOTAL THREAD SHEAR ULTIMATE	1.2 (MAX AXIAL)
SHEAR ULTIMATE	2.42 (MAX SHEAR)
BENDING ULTIMATE	> 10
COMBINED SHEAR, TENSION AND BENDING ULTIMATE	1.033 (MAX SHEAR)
NOMINAL CONFIGURATION MINIMUM MOS	0.57
NOMINAL CONFIGURATION MINIMUM ULTIMATE MOS	1.03

NOMINAL CONFIGURATION SUMMARY OF MARGINS FOR BEARING FLANGES	
FLANGE 1 - BEARING ULTIMATE	6.55
FLANGE 1 - BEARING YIELD	8.36
FLANGE 2 - BEARING ULTIMATE	>10
FLANGE 2 - BEARING YIELD	>10
NOMINAL CONFIGURATION MINIMUM MOS	6.55 (ULT-FL 1)

FAIL SAFE CONFIGURATION IDENTIFICATION	
FAIL SAFE FAILED BOLT CONFIGURATION	TEST FAIL SAFE
FAIL SAFE 1 FAILED BOLT ID	10114

FAIL SAFE CONFIGURATION BOLT LOADS	
MAX AXIAL - ELEMENT ID	33654
MAX AXIAL - LOAD CASE ID	12
MAX AXIAL - AXIAL LOAD [lb]	19.9
max axial - axial load [N]	88.1
MAX AXIAL - SHEAR LOAD [lb]	5.7
max axial - shear load [N]	25.3
MAX SHEAR - ELEMENT ID	10115
MAX SHEAR - LOAD CASE ID	1
MAX SHEAR - AXIAL LOAD [lb]	3.8
max shear - axial load [N]	16.8
MAX SHEAR - SHEAR LOAD [lb]	168.6
max shear - shear load [N]	749.8
MAX COMBINED - LOAD CASE ID	SAME AS MAX SHEAR
MAX COMBINED - AXIAL LOAD [lb]	
max combined - axial load [N]	
MAX COMBINED - SHEAR LOAD [lb]	
max combined - shear load [N]	

FAIL SAFE CONFIGURATION SUMMARY OF MARGINS FOR BOLTS	
MOS CALCULATION - CONFIGURATION ID	TEST FAIL SAFE
JOINT SEPARATION	12.79 (MAX AXIAL)
DIRECT TENSION ULTIMATE	86.97 (MAX AXIAL)
TOTAL TENSION ULTIMATE	1.28 (MAX AXIAL)
DIRECT THREAD SHEAR ULTIMATE	84.05 (MAX AXIAL)
TOTAL THREAD SHEAR ULTIMATE	1.21 (MAX AXIAL)
SHEAR ULTIMATE	4.57 (MAX SHEAR)
BENDING ULTIMATE	> 10
COMBINED SHEAR, TENSION AND BENDING ULTIMATE	1.22 (MAX SHEAR)
FAIL SAFE CONFIGURATION MINIMUM ULTIMATE MOS	1.21

FAIL SAFE CONFIGURATION SUMMARY OF MARGINS FOR BEARING FLANGES	
FLANGE 1 - BEARING ULTIMATE	>10
FLANGE 2 - BEARING ULTIMATE	>10
FAIL SAFE CONFIGURATION MINIMUM MOS	>10

Table 10-4: Joint 2 nominal and fail safe analyses (test)

Questo documento contiene informazioni di proprietà di CARLO GAVAZZI SPACE SpA. Tutti i diritti sono riservati.
All information contained in this document are property of CARLO GAVAZZI SPACE SpA. All right reserved.

10.1.3.3 JOINT 3

In the following figure positions of the bolts for the Joint 3 are shown:

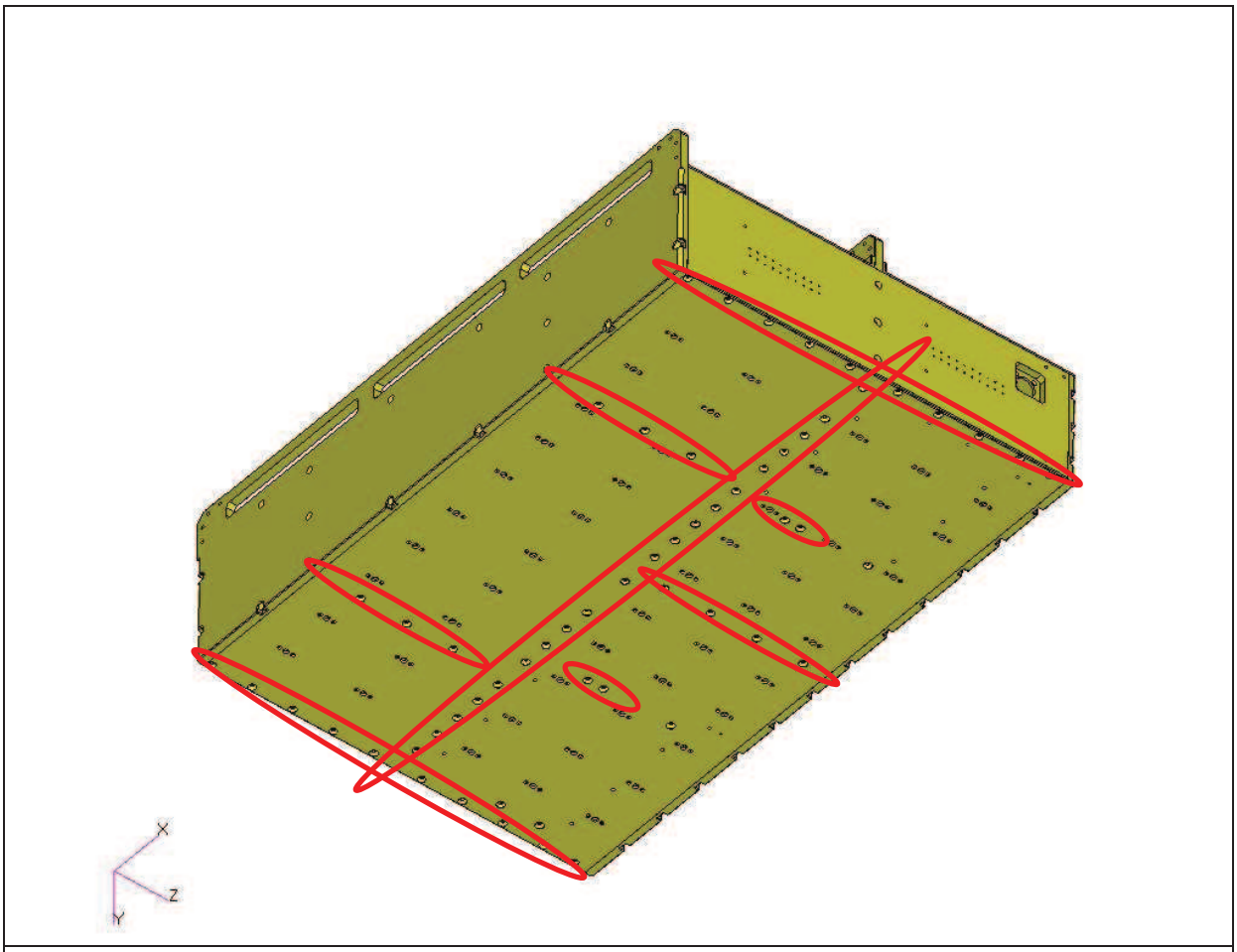

Figure 10-11: Joint 3

Questo documento contiene informazioni di proprietà di CARLO GAVAZZI SPACE SpA. Tutti i diritti sono riservati.
All information contained in this document are property of CARLO GAVAZZI SPACE SpA. All right reserved.

In the following figures the forces applied to the joint are shown:

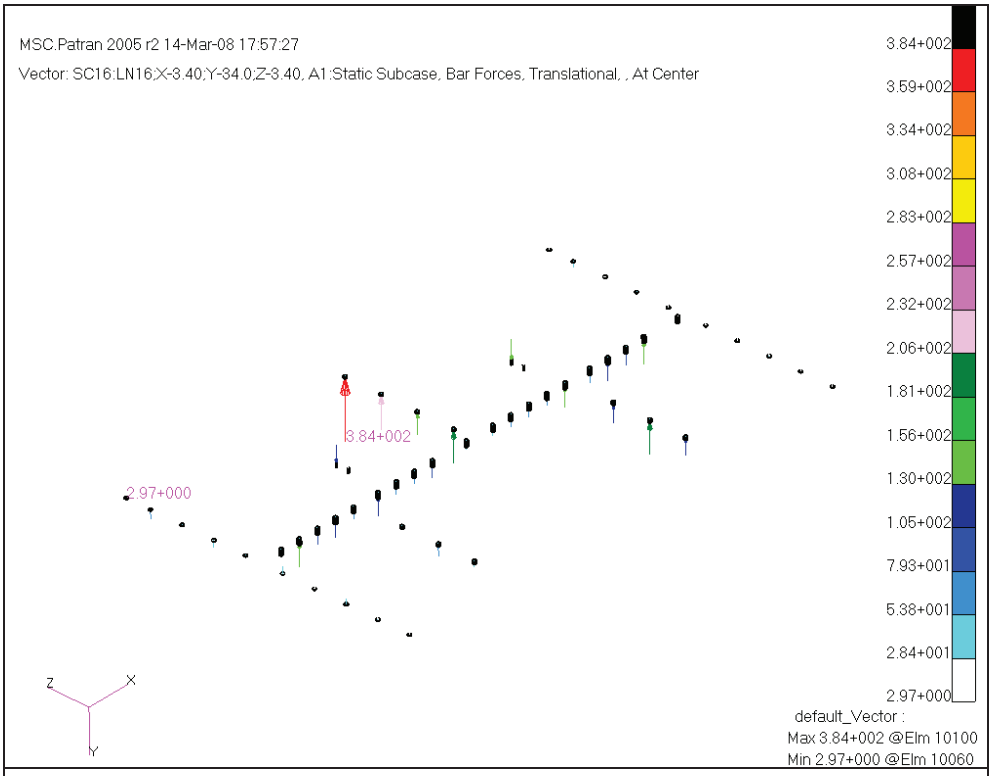

Figure 10-12: Joint 3 critical axial case (test)

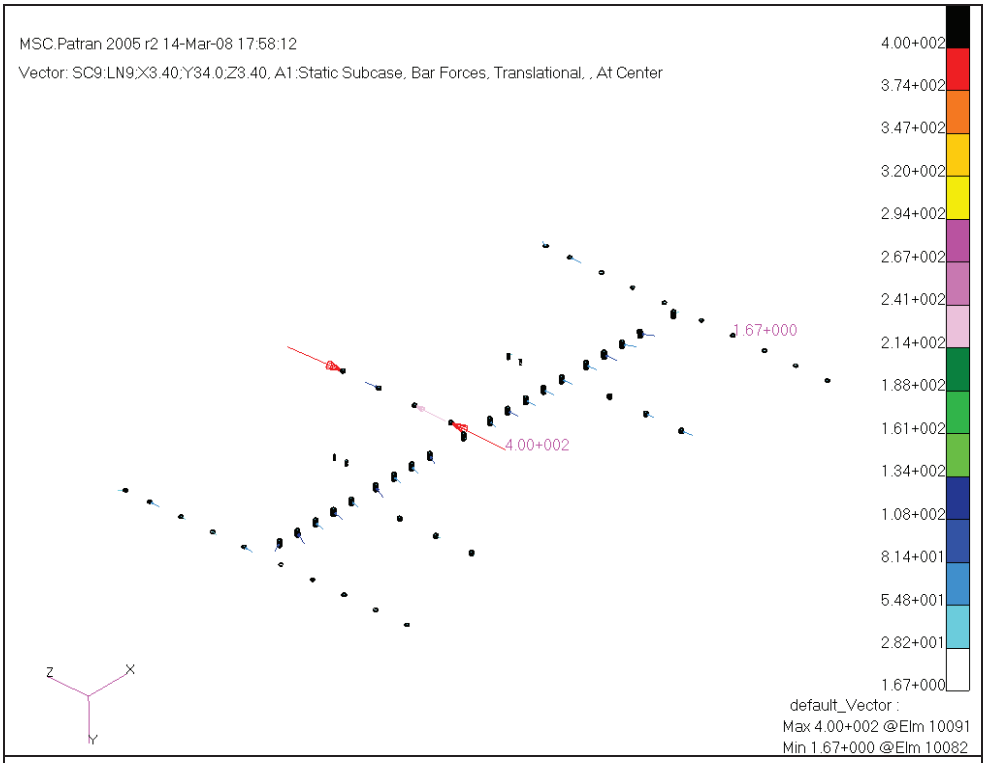

Figure 10-13: Joint 3 critical shear case (test)

Questo documento contiene informazioni di proprietà di CARLO GAVAZZI SPACE SpA. Tutti i diritti sono riservati.
All information contained in this document are property of CARLO GAVAZZI SPACE SpA. All right reserved.

JUNCTION PROPERTIES	
BOLT	MS24671
WASHER 1	NA
WASHER 2	NA
NUT	NA
INSERT	MS21209 C08-10
INSERT IN FLANGE	2
NUMBER OF FLANGES	2
LUBRICATED	NO
FLANGE 1 NAME	PDS WALLS
FLANGE 1 MATERIAL	Al7075T7351
FLANGE 1 MATERIAL SPEC	AMS-QQ-A-250/12
FLANGE 1 THICKNESS [in]	0.138
FLANGE 1 HOLE DIAMETER [in]	0.18
FLANGE 2 NAME	PDS WALLS
FLANGE 2 MATERIAL	Al7075T7351
FLANGE 2 MATERIAL SPEC	AMS-QQ-A-250/12
FLANGE 2 THICKNESS [in]	0.246
FLANGE 2 HOLE DIAMETER [in]	0.18

LOADS	
MAX AXIAL - CONFIGURATION ID	NOMINAL
MAX AXIAL - ELEMENT ID	10100
MAX AXIAL - LOAD CASE ID	16
MAX AXIAL - AXIAL LOAD [lb]	86.5
max axial - axial load [N]	384.5
MAX AXIAL - SHEAR LOAD [lb]	86.6
max axial - shear load [N]	384.9
MAX SHEAR - CONFIGURATION ID	NOMINAL
MAX SHEAR - ELEMENT ID	10091
MAX SHEAR - LOAD CASE ID	9
MAX SHEAR - AXIAL LOAD [lb]	-45.6
max shear - axial load [N]	-202.6
MAX SHEAR - SHEAR LOAD [lb]	90.0
max shear - shear load [N]	400.2
MAX COMBINED - CONFIGURATION ID	NOMINAL
MAX COMBINED - ELEMENT ID	SAME AS MAX AXIAL
MAX COMBINED - LOAD CASE ID	
MAX COMBINED - AXIAL LOAD [lb]	
max combined - axial load [N]	
MAX COMBINED - SHEAR LOAD [lb]	
max combined - shear load [N]	

FACTORS OF SAFETY	
ULTIMATE (for nominal configuration)	2.0
ULTIMATE (for fail safe configuration)	1.0
YIELD (only for nominal configuration)	1.25
JOINT SEPARATION (for nominal configuration)	1.2
JOINT SEPARATION (for fail safe configuration)	1.0
FITTING FACTOR	1.15

BOLT & INSERT DATA	
NOMINAL DIAMETER OF BOLT [in]	0.164
NUMBER OF THREADS/INCH [1/in]	32
TOTAL LENGHT OF BOLT [in]	0.5
LENGHT OF INSERT [in]	0.246
THREADED LENGHT [in]	0.5
MIN EXT DIAMETER OF INSERT [in]	0.205
DEPTH OF RECESS FOR INSERT [in]	0.02
HEIGHT OF NUT [in]	NA

WASHER DATA	
THICKNESS OF WASHER [in]	NA
OUTER DIAMETER OF WASHER [in]	NA
INNER DIAMETER OF WASHER [in]	NA
BOLT HEAD DIAMETER [in]	0.359

FLANGE DATA	
THICK OF FLANGE 1 [in]	0.138
THICK OF FLANGE 2 [in]	0.246
DIAMETER OF HOLE [in]	0.18

BOLT MATERIAL PROPERTY DATA	
TEMP FACTOR FOR ULTIMATE STRENGHT	0.94
TEMP FACTOR FOR YIELD STRENGHT	0.94
ULTIMATE TENSILE ALLOWABLE STRESS [ksi]	80
YIELD TENSILE ALLOWABLE STRESS [ksi]	60
TEMP FACTOR FOR MODULUS	0.94
MODULUS OF ELASTICITY [ksi]	29100
THERMAL COEFF - HOT [1E(-6)/deg]	9.1
THERMAL COEFF - COLD [1E(-6)/deg]	7.8

INSERT MATERIAL PROPERTY DATA	
TEMP FACTOR FOR ULTIMATE STRENGHT	0.94
ULTIMATE TENSILE ALLOWABLE STRESS [ksi]	150

NUT MATERIAL PROPERTY DATA	
TEMP FACTOR FOR ULTIMATE STRENGHT	NA
TENSILE ULTIMATE ALLOWABLE STRESS [psi]	NA
ULTIMATE AXIAL LOAD [lb]	NA

WASHER MATERIAL PROPERTY DATA	
TEMP FACTOR FOR MODULUS	1
MODULUS OF ELASTICITY [ksi]	29100

FLANGE MATERIAL PROPERTY DATA	
TEMP FACTOR FOR MODULUS OF FLANGE 1	0.94
TEMP FACTOR FOR MODULUS OF FLANGE 2	0.94
TEMP FACTOR FOR ULTIMATE STRENGHT OF FLANGE 2	0.94
ULTIMATE SHEAR ALLOWABLE STRESS OF FLANGE 2 [psi]	27000
MODULUS OF ELASTICITY FOR FLANGE 1 [ksi]	10500
MODULUS OF ELASTICITY FOR FLANGE 2 [ksi]	10500
THERMAL COEFF OF FLANGE 1 - HOT [1E(-6)/deg]	12.15
THERMAL COEFF OF FLANGE 1 - COLD [1E(-6)/deg]	11.5
THERMAL COEFF OF FLANGE 2 - HOT [1E(-6)/deg]	12.15
THERMAL COEFF OF FLANGE 2 - COLD [1E(-6)/deg]	11.5
ULTIMATE BEARING ALLOWABLE STRESS FOR FLANGE 1 [psi]	95870
YIELD BEARING ALLOWABLE STRESS FOR FLANGE 1 [psi]	74260
ULTIMATE BEARING ALLOWABLE STRESS FOR FLANGE 2 [psi]	95870
YIELD BEARING ALLOWABLE STRESS FOR FLANGE 2 [psi]	74260

TORQUE AND PRELOAD DATA	
MAX TORQUE [lb in]	11.0
max torque [N m]	1.2
MIN TORQUE [lb in]	10.5
min torque [N m]	1.2
COEFFICIENT OF UTILIZATION [%]	66
LOADING PLANE FACTOR	0.5
PRELOAD UNCETRAINTY	0.35
TORQUE COEFFICIENT	0.2

NOMINAL CONFIGURATION SUMMARY OF MARGINS FOR BOLTS	
MOS CALCULATION - CONFIGURATION ID	NOMINAL
JOINT SEPARATION	0.22 (MAX AXIAL)
DIRECT TENSION ULTIMATE	4.3 (MAX AXIAL)
DIRECT TENSION YIELD	5.35 (MAX AXIAL)
TOTAL TENSION ULTIMATE	0.93 (MAX AXIAL)
TOTAL TENSION YIELD	0.472 (MAX AXIAL)
DIRECT THREAD SHEAR ULTIMATE	8.78 (MAX AXIAL)
TOTAL THREAD SHEAR ULTIMATE	2.57 (MAX AXIAL)
SHEAR ULTIMATE	1.61 (MAX SHEAR)
BENDING ULTIMATE	> 10
COMBINED SHEAR, TENSION AND BENDING ULTIMATE	0.684 (MAX AXIAL)
NOMINAL CONFIGURATION MINIMUM MOS	0.22
NOMINAL CONFIGURATION MINIMUM ULTIMATE MOS	0.68

NOMINAL CONFIGURATION SUMMARY OF MARGINS FOR BEARING FLANGES	
FLANGE 1 - BEARING ULTIMATE	>10
FLANGE 1 - BEARING YIELD	>10
FLANGE 2 - BEARING ULTIMATE	>10
FLANGE 2 - BEARING YIELD	>10
NOMINAL CONFIGURATION MINIMUM MOS	>10

FAIL SAFE CONFIGURATION IDENTIFICATION	
FAIL SAFE FAILED BOLT CONFIGURATION	TEST FAIL SAFE
FAIL SAFE 1 FAILED BOLT ID	10100

FAIL SAFE CONFIGURATION BOLT LOADS	
MAX AXIAL - ELEMENT ID	10093
MAX AXIAL - LOAD CASE ID	16
MAX AXIAL - AXIAL LOAD [lb]	65.1
max axial - axial load [N]	289.2
MAX AXIAL - SHEAR LOAD [lb]	66.3
max axial - shear load [N]	294.7
MAX SHEAR - ELEMENT ID	10091
MAX SHEAR - LOAD CASE ID	9
MAX SHEAR - AXIAL LOAD [lb]	-47.1
max shear - axial load [N]	-209.1
MAX SHEAR - SHEAR LOAD [lb]	87.8
max shear - shear load [N]	390.2
MAX COMBINED - LOAD CASE ID	SAME AS MAX SHEAR
MAX COMBINED - AXIAL LOAD [lb]	
max combined - axial load [N]	
MAX COMBINED - SHEAR LOAD [lb]	
max combined - shear load [N]	

FAIL SAFE CONFIGURATION SUMMARY OF MARGINS FOR BOLTS	
MOS CALCULATION - CONFIGURATION ID	TEST FAIL SAFE
JOINT SEPARATION	0.95 (MAX AXIAL)
DIRECT TENSION ULTIMATE	13.07 (MAX AXIAL)
TOTAL TENSION ULTIMATE	0.98 (MAX AXIAL)
DIRECT THREAD SHEAR ULTIMATE	25 (MAX AXIAL)
TOTAL THREAD SHEAR ULTIMATE	2.66 (MAX AXIAL)
SHEAR ULTIMATE	4.34 (MAX SHEAR)
BENDING ULTIMATE	> 10
COMBINED SHEAR, TENSION AND BENDING ULTIMATE	0.94 (MAX SHEAR)
FAIL SAFE CONFIGURATION MINIMUM ULTIMATE MOS	0.94

FAIL SAFE CONFIGURATION SUMMARY OF MARGINS FOR BEARING FLANGES	
FLANGE 1 - BEARING ULTIMATE	>10
FLANGE 2 - BEARING ULTIMATE	>10
FAIL SAFE CONFIGURATION MINIMUM MOS	>10

Table 10-5: Joint 3 nominal and fail safe analyses (test)

Questo documento contiene informazioni di proprietà di CARLO GAVAZZI SPACE SpA. Tutti i diritti sono riservati.
All information contained in this document are property of CARLO GAVAZZI SPACE SpA. All right reserved.

10.1.3.4 JOINT 4

In the following figure positions of the bolts for the Joint 4 are shown:

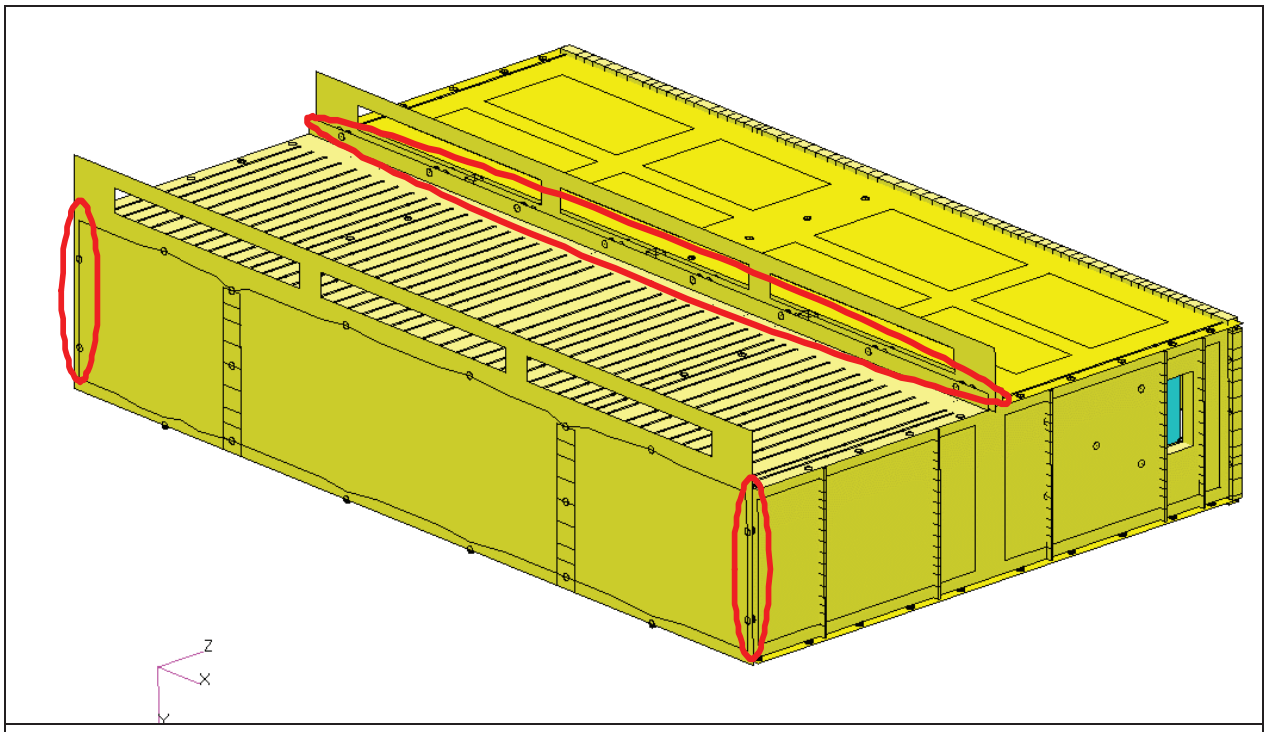

Figure 10-14: Joint 4

Questo documento contiene informazioni di proprietà di CARLO GAVAZZI SPACE SpA. Tutti i diritti sono riservati.
All information contained in this document are property of CARLO GAVAZZI SPACE SpA. All right reserved.

In the following figures the forces applied to the joint are shown:

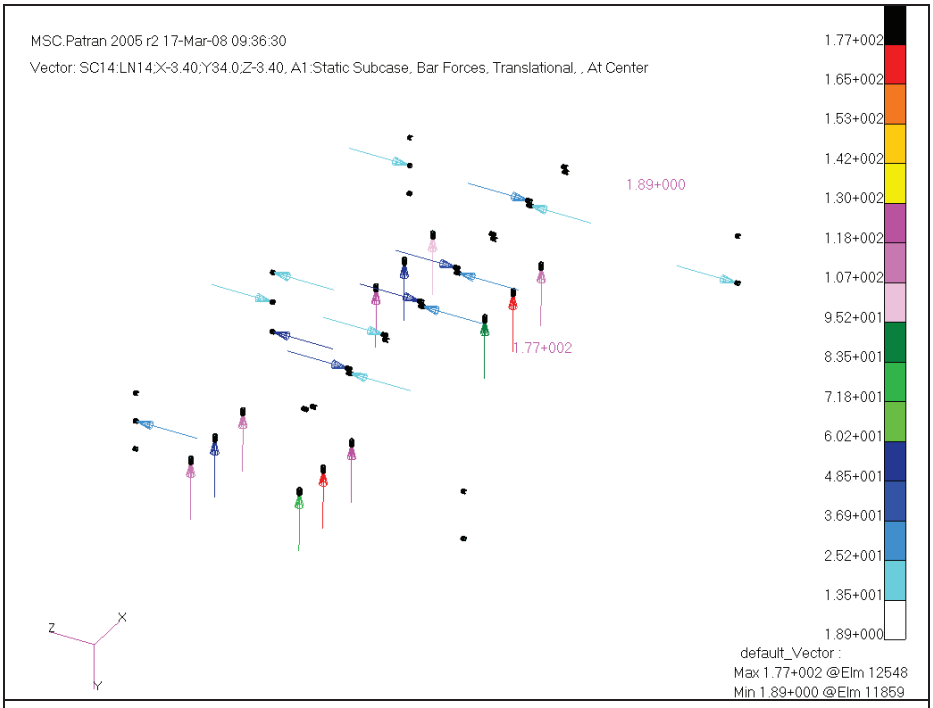

Figure 10-15: Joint 4 critical axial case (test)

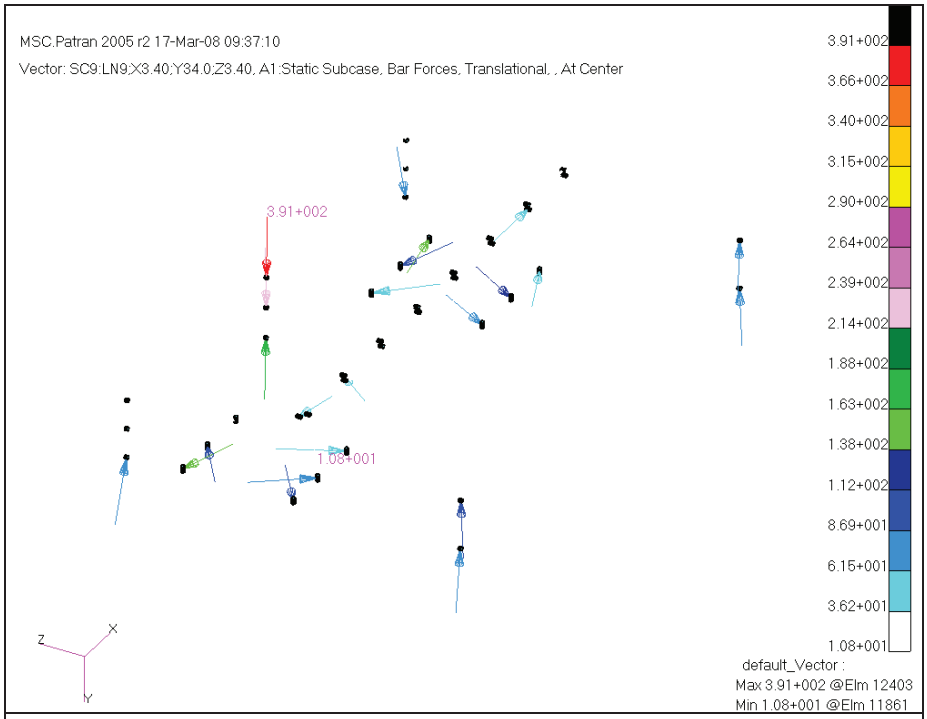

Figure 10-16: Joint 4 critical shear case (test)

Questo documento contiene informazioni di proprietà di CARLO GAVAZZI SPACE SpA. Tutti i diritti sono riservati.
All information contained in this document are property of CARLO GAVAZZI SPACE SpA. All right reserved.

JUNCTION PROPERTIES	
BOLT	NAS1351N3
WASHER 1	NAS620 C10
WASHER 2	NA
NUT	NA
INSERT	MS21209 F1-10
INSERT IN FLANGE	2
NUMBER OF FLANGES	2
LUBRICATED	NO
FLANGE 1 NAME	PDS WALLS
FLANGE 1 MATERIAL	Al7075T7351
FLANGE 1 MATERIAL SPEC	AMS-QQ-A-250/12
FLANGE 1 THICKNESS [in]	0.118
FLANGE 1 HOLE DIAMETER [in]	0.21
FLANGE 2 NAME	PDS WALLS
FLANGE 2 MATERIAL	Al7075T7351
FLANGE 2 MATERIAL SPEC	AMS-QQ-A-250/12
FLANGE 2 THICKNESS [in]	0.18
FLANGE 2 HOLE DIAMETER [in]	0.21

LOADS	
MAX AXIAL - CONFIGURATION ID	NOMINAL
MAX AXIAL - ELEMENT ID	12548
MAX AXIAL - LOAD CASE ID	14
MAX AXIAL - AXIAL LOAD [lb]	39.8
max axial - axial load [N]	176.8
MAX AXIAL - SHEAR LOAD [lb]	11.4
max axial - shear load [N]	50.3
MAX SHEAR - CONFIGURATION ID	NOMINAL
MAX SHEAR - ELEMENT ID	12403
MAX SHEAR - LOAD CASE ID	9
MAX SHEAR - AXIAL LOAD [lb]	7.5
max shear - axial load [N]	33.0
MAX SHEAR - SHEAR LOAD [lb]	87.9
max shear - shear load [N]	391.0
MAX COMBINED - CONFIGURATION ID	NOMINAL
MAX COMBINED - ELEMENT ID	SAME AS MAX AXIAL
MAX COMBINED - LOAD CASE ID	
MAX COMBINED - AXIAL LOAD [lb]	
max combined - axial load [N]	
MAX COMBINED - SHEAR LOAD [lb]	
max combined - shear load [N]	

FACTORS OF SAFETY	
ULTIMATE (for nominal configuration)	2.0
ULTIMATE (for fail safe configuration)	1.0
YIELD (only for nominal configuration)	1.25
JOINT SEPARATION (for nominal configuration)	1.2
JOINT SEPARATION (for fail safe configuration)	1.0
FITTING FACTOR	1.15

BOLT & INSERT DATA	
NOMINAL DIAMETER OF BOLT [in]	0.19
NUMBER OF THREADS/INCH [1/in]	32
TOTAL LENGHT OF BOLT [in]	0.5
LENGHT OF INSERT [in]	0.18
THREADED LENGHT [in]	0.5
MIN EXT DIAMETER OF INSERT [in]	0.236
DEPTH OF RECESS FOR INSERT [in]	0.02
HEIGHT OF NUT [in]	NA

WASHER DATA	
THICKNESS OF WASHER [in]	0.063
OUTER DIAMETER OF WASHER [in]	0.354
INNER DIAMETER OF WASHER [in]	0.195
BOLT HEAD DIAMETER [in]	0.3123

FLANGE DATA	
THICK OF FLANGE 1 [in]	0.118
THICK OF FLANGE 2 [in]	0.18
DIAMETER OF HOLE [in]	0.21

BOLT MATERIAL PROPERTY DATA	
TEMP FACTOR FOR ULTIMATE STRENGHT	0.94
TEMP FACTOR FOR YIELD STRENGHT	0.94
ULTIMATE TENSILE ALLOWABLE STRESS [ksi]	160
YIELD TENSILE ALLOWABLE STRESS [ksi]	110
TEMP FACTOR FOR MODULUS	0.94
MODULUS OF ELASTICITY [ksi]	29100
THERMAL COEFF - HOT [1E(-6)/deg]	9.1
THERMAL COEFF - COLD [1E(-6)/deg]	7.8

INSERT MATERIAL PROPERTY DATA	
TEMP FACTOR FOR ULTIMATE STRENGHT	0.94
ULTIMATE TENSILE ALLOWABLE STRESS [ksi]	150

NUT MATERIAL PROPERTY DATA	
TEMP FACTOR FOR ULTIMATE STRENGHT	NA
TENSILE ULTIMATE ALLOWABLE STRESS [psi]	NA
ULTIMATE AXIAL LOAD [lb]	NA

WASHER MATERIAL PROPERTY DATA	
TEMP FACTOR FOR MODULUS	1
MODULUS OF ELASTICITY [ksi]	29100

FLANGE MATERIAL PROPERTY DATA	
TEMP FACTOR FOR MODULUS OF FLANGE 1	0.94
TEMP FACTOR FOR MODULUS OF FLANGE 2	0.94
TEMP FACTOR FOR ULTIMATE STRENGHT OF FLANGE 2	0.94
ULTIMATE SHEAR ALLOWABLE STRESS OF FLANGE 2 [psi]	27000
MODULUS OF ELASTICITY FOR FLANGE 1 [ksi]	10500
MODULUS OF ELASTICITY FOR FLANGE 2 [ksi]	10500
THERMAL COEFF OF FLANGE 1 - HOT [1E(-6)/deg]	12.15
THERMAL COEFF OF FLANGE 1 - COLD [1E(-6)/deg]	11.5
THERMAL COEFF OF FLANGE 2 - HOT [1E(-6)/deg]	12.15
THERMAL COEFF OF FLANGE 2 - COLD [1E(-6)/deg]	11.5
ULTIMATE BEARING ALLOWABLE STRESS FOR FLANGE 1 [psi]	95870
YIELD BEARING ALLOWABLE STRESS FOR FLANGE 1 [psi]	74260
ULTIMATE BEARING ALLOWABLE STRESS FOR FLANGE 2 [psi]	95870
YIELD BEARING ALLOWABLE STRESS FOR FLANGE 2 [psi]	74260

TORQUE AND PRELOAD DATA	
MAX TORQUE [lb in]	32.0
max torque [N m]	3.6
MIN TORQUE [lb in]	30.0
min torque [N m]	3.4
COEFFICIENT OF UTILIZATION [%]	60
LOADING PLANE FACTOR	0.5
PRELOAD UNCETRAINTY	0.35
TORQUE COEFFICIENT	0.2

NOMINAL CONFIGURATION SUMMARY OF MARGINS FOR BOLTS	
MOS CALCULATION - CONFIGURATION ID	NOMINAL
JOINT SEPARATION	7.65 (MAX AXIAL)
DIRECT TENSION ULTIMATE	30.63 (MAX AXIAL)
DIRECT TENSION YIELD	33.79 (MAX AXIAL)
TOTAL TENSION ULTIMATE	1.37 (MAX AXIAL)
TOTAL TENSION YIELD	0.637 (MAX AXIAL)
DIRECT THREAD SHEAR ULTIMATE	16.91 (MAX AXIAL)
TOTAL THREAD SHEAR ULTIMATE	0.34 (MAX AXIAL)
SHEAR ULTIMATE	6.83 (MAX SHEAR)
BENDING ULTIMATE	> 10
COMBINED SHEAR, TENSION AND BENDING ULTIMATE	1.361 (MAX SHEAR)
NOMINAL CONFIGURATION MINIMUM MOS	0.34
NOMINAL CONFIGURATION MINIMUM ULTIMATE MOS	0.34

NOMINAL CONFIGURATION SUMMARY OF MARGINS FOR BEARING FLANGES	
FLANGE 1 - BEARING ULTIMATE	>10
FLANGE 1 - BEARING YIELD	>10
FLANGE 2 - BEARING ULTIMATE	>10
FLANGE 2 - BEARING YIELD	>10
NOMINAL CONFIGURATION MINIMUM MOS	>10

FAIL SAFE CONFIGURATION IDENTIFICATION	
FAIL SAFE FAILED BOLT CONFIGURATION	TEST FAIL SAFE
FAIL SAFE 1 FAILED BOLT ID	12548

FAIL SAFE CONFIGURATION BOLT LOADS	
MAX AXIAL - ELEMENT ID	12547
MAX AXIAL - LOAD CASE ID	10
MAX AXIAL - AXIAL LOAD [lb]	44.7
max axial - axial load [N]	198.5
MAX AXIAL - SHEAR LOAD [lb]	10.5
max axial - shear load [N]	46.6
MAX SHEAR - ELEMENT ID	12403
MAX SHEAR - LOAD CASE ID	9
MAX SHEAR - AXIAL LOAD [lb]	7.5
max shear - axial load [N]	33.2
MAX SHEAR - SHEAR LOAD [lb]	88.7
max shear - shear load [N]	394.4
MAX COMBINED - LOAD CASE ID	SAME AS MAX SHEAR
MAX COMBINED - AXIAL LOAD [lb]	
max combined - axial load [N]	
MAX COMBINED - SHEAR LOAD [lb]	
max combined - shear load [N]	

FAIL SAFE CONFIGURATION SUMMARY OF MARGINS FOR BOLTS	
MOS CALCULATION - CONFIGURATION ID	TEST FAIL SAFE
JOINT SEPARATION	8.24 (MAX SHEAR)
DIRECT TENSION ULTIMATE	55.32 (MAX SHEAR)
TOTAL TENSION ULTIMATE	1.38 (MAX SHEAR)
DIRECT THREAD SHEAR ULTIMATE	30.89 (MAX SHEAR)
TOTAL THREAD SHEAR ULTIMATE	0.35 (MAX SHEAR)
SHEAR ULTIMATE	14.51 (MAX AXIAL)
BENDING ULTIMATE	> 10
COMBINED SHEAR, TENSION AND BENDING ULTIMATE	1.38 (MAX SHEAR)
FAIL SAFE CONFIGURATION MINIMUM ULTIMATE MOS	0.35

FAIL SAFE CONFIGURATION SUMMARY OF MARGINS FOR BEARING FLANGES	
FLANGE 1 - BEARING ULTIMATE	>10
FLANGE 2 - BEARING ULTIMATE	>10
FAIL SAFE CONFIGURATION MINIMUM MOS	>10

Table 10-6: Joint 4 nominal and fail safe analyses (test)

Questo documento contiene informazioni di proprietà di CARLO GAVAZZI SPACE SpA. Tutti i diritti sono riservati.
All information contained in this document are property of CARLO GAVAZZI SPACE SpA. All right reserved.

10.1.3.5 JOINT 5

In the following figure positions of the bolts for the Joint 5 are shown:

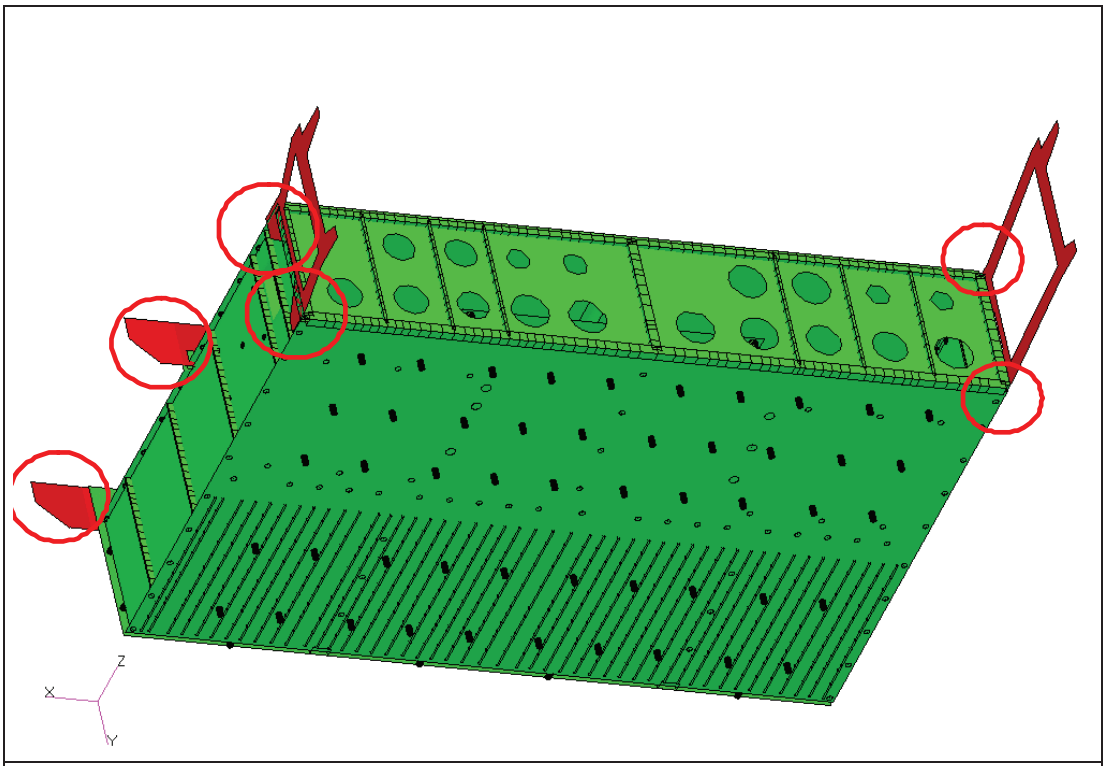

Figure 10-17: Joint 5

The joint 5 in Test configuration is not utilized.

Questo documento contiene informazioni di proprietà di CARLO GAVAZZI SPACE SpA. Tutti i diritti sono riservati.
All information contained in this document are property of CARLO GAVAZZI SPACE SpA. All right reserved.

10.2 FLIGHT CONFIGURATION

Three different types of analyses are performed:

10.2.1 DISPLACEMENT ANALYSIS
10.2.2 STRESS ANALYSIS
10.2.3 JOINT ANALYSIS

The model of PDS + WAKE radiator has been used.

10.2.1 DISPLACEMENT ANALYSIS IN FLIGHT CONFIGURATION

The worst condition is for **NODE 15887** for **Load Case 1032**.
The resulting displacement is **10.7 mm**.
Following figure shows displacements for this subcase.

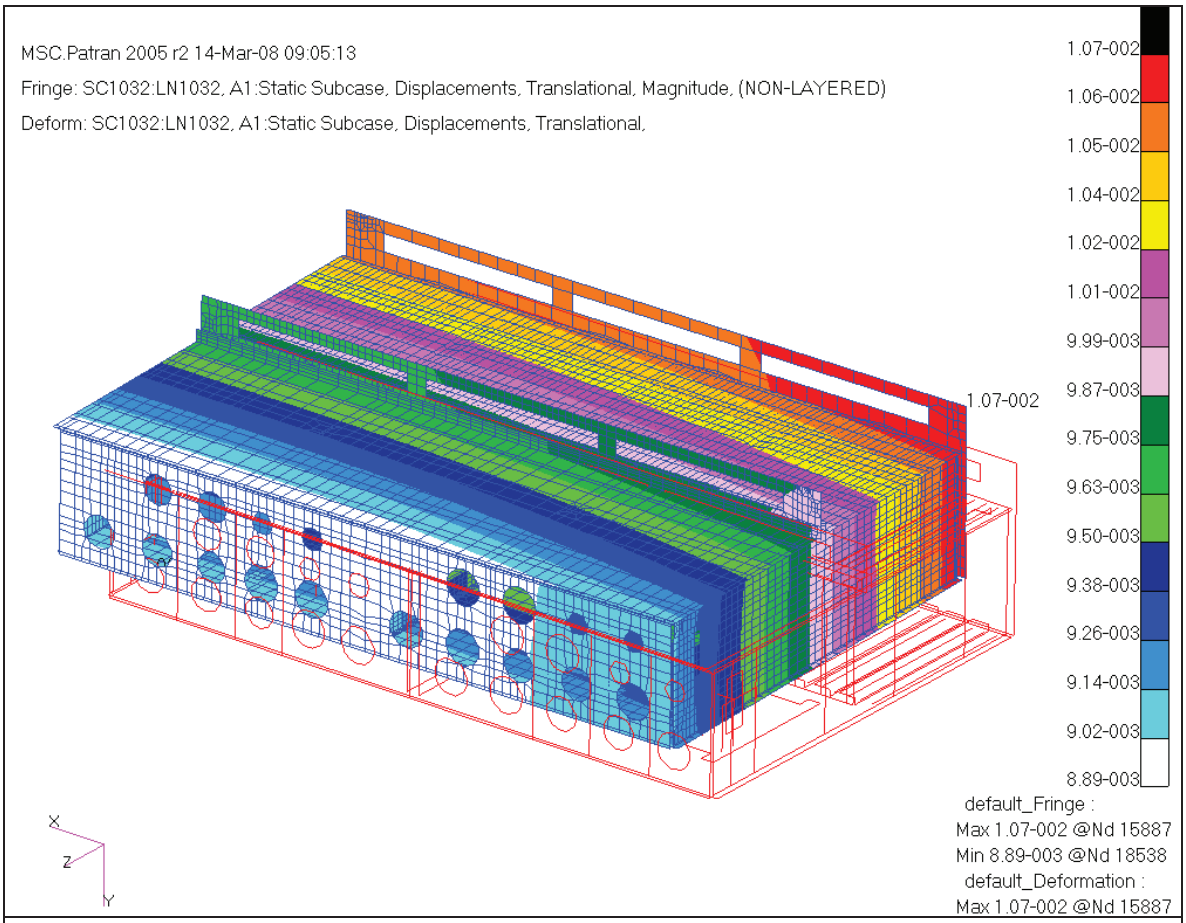

Figure 10-18: Maximum displacement – Load case 1032

10.2.2 STRESS ANALYSIS IN FLIGHT CONFIGURATION

For each safety critical item the stress contour and MoS calculation are shown in the next pages.
The structure is divided in the following items:

10.2.2.1 STRUCTURE

Questo documento contiene informazioni di proprietà di CARLO GAVAZZI SPACE SpA. Tutti i diritti sono riservati.
All information contained in this document are property of CARLO GAVAZZI SPACE SpA. All right reserved.

10.2.2.2 ELECTRONICS

Summary of stress analysis results are shown in10.3.2 MARGINS OF SAFETY IN FLIGHT CONFIGURATION.

10.2.2.1 STRUCTURE

10.2.2.1.1 SHELL MODELED ELEMENTS

The worst condition is for **ELEMENT 25828** for **Load Case 2031** at **Layer Z1**.
The resulting Von Mises stress is: $\mathbf{f_{VM}}$ **= 66 MPa**.
Following figure shows stress distribution for this subcase.

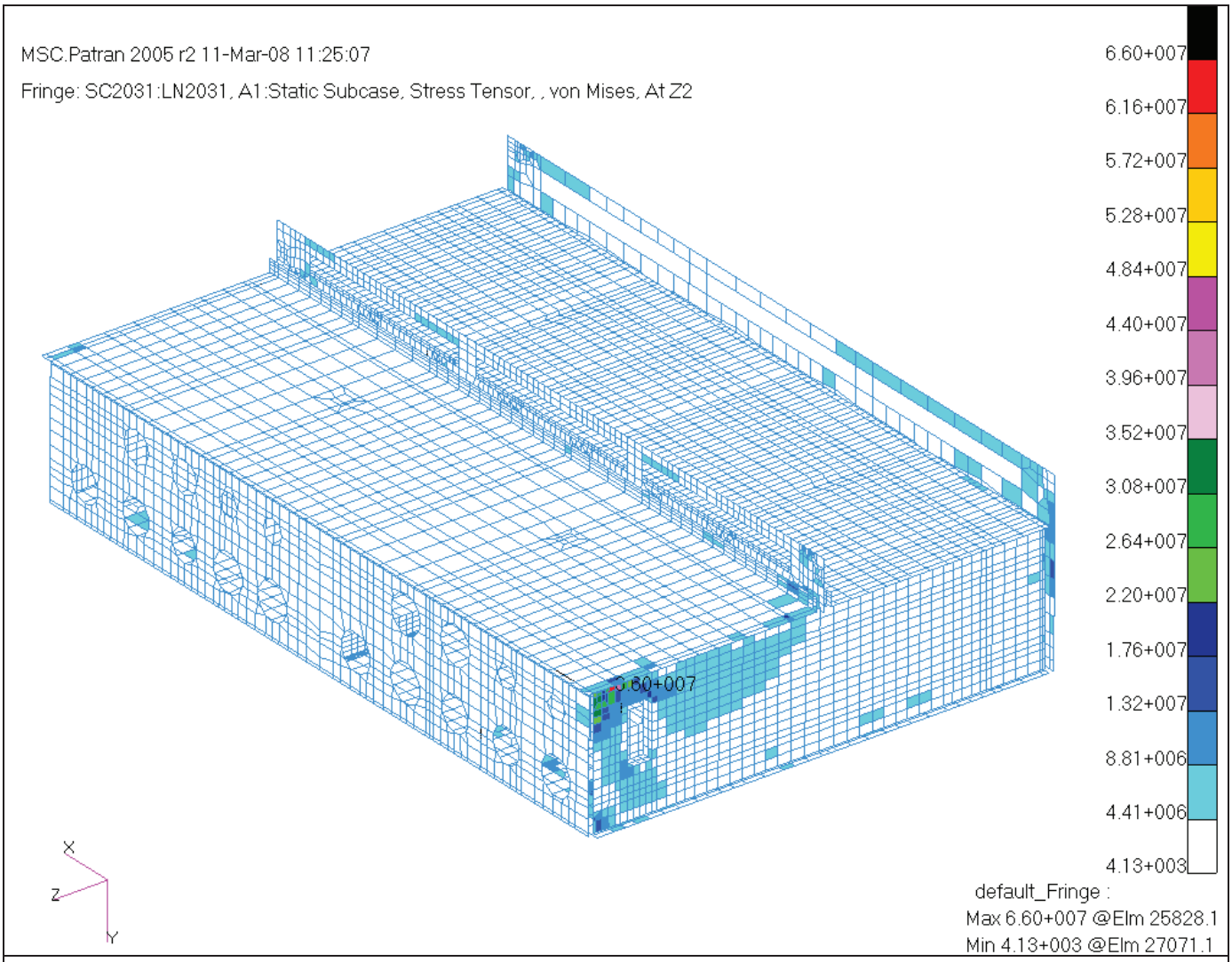

Figure 10-19: Structure shell elements Von Mises stress, Load Case 2031, Layer Z1

Questo documento contiene informazioni di proprietà di CARLO GAVAZZI SPACE SpA. Tutti i diritti sono riservati.
All information contained in this document are property of CARLO GAVAZZI SPACE SpA. All right reserved.

10.2.2.1.2 BEAM MODELED ELEMENTS

The worst condition is for **ELEMENT 12604** for **Load Case 2031**.
The resulting Maximum Combined stress is: **f_{MC} = 19.1 MPa**.
Following figure shows stress distribution for this subcase.

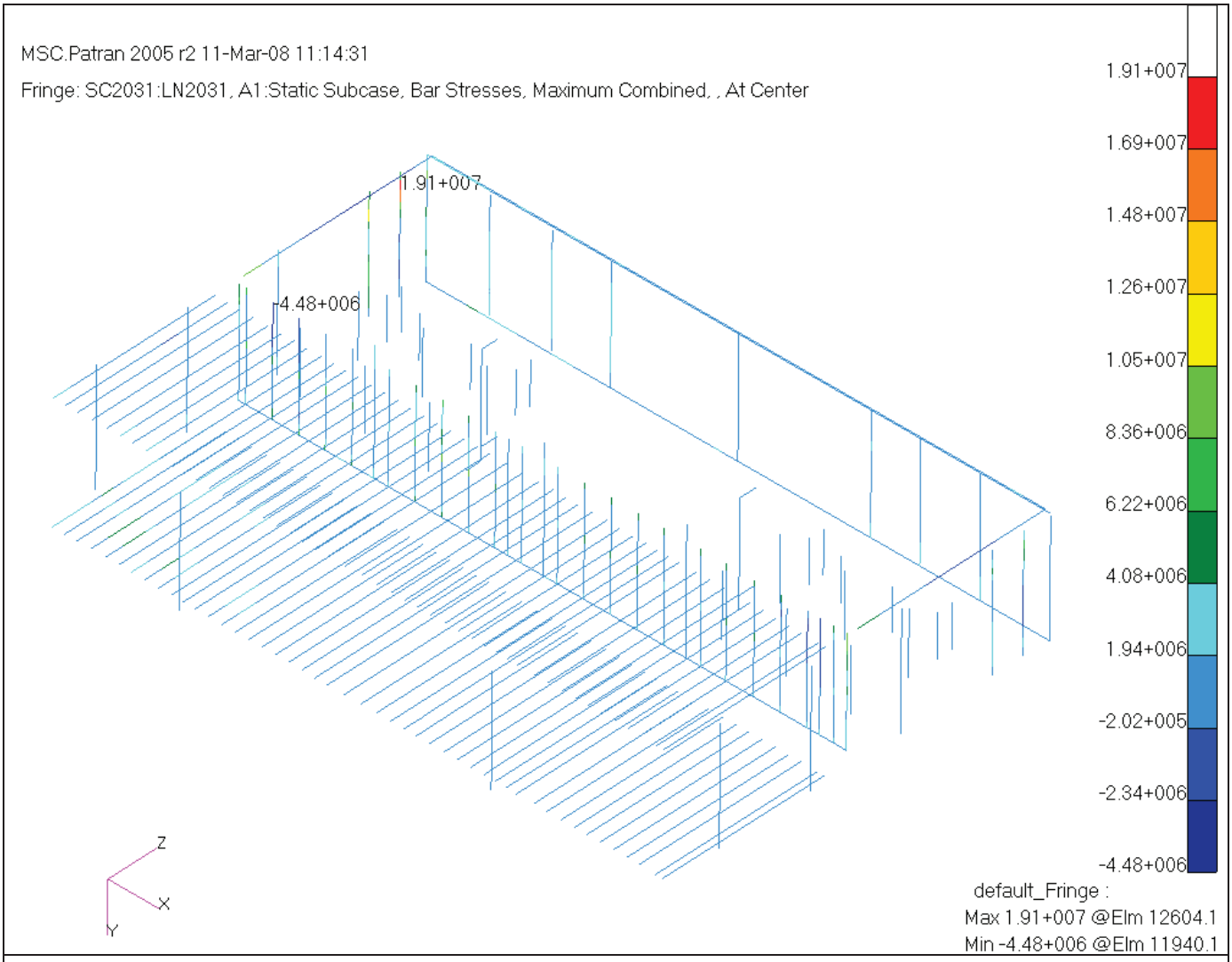

Figure 10-20: Structure beam elements Maximum Combined stress, Load Case 2031

Questo documento contiene informazioni di proprietà di CARLO GAVAZZI SPACE SpA. Tutti i diritti sono riservati.
All information contained in this document are property of CARLO GAVAZZI SPACE SpA. All right reserved.

10.2.2.2 ELECTRONICS

The worst condition is for **ELEMENT 31940** for **Load Case 1016** at **Layer Z2**.
The resulting Von Mises stress is: **f_{VM} = 3.9 MPa**.
Following figures show stress distribution for this subcase.

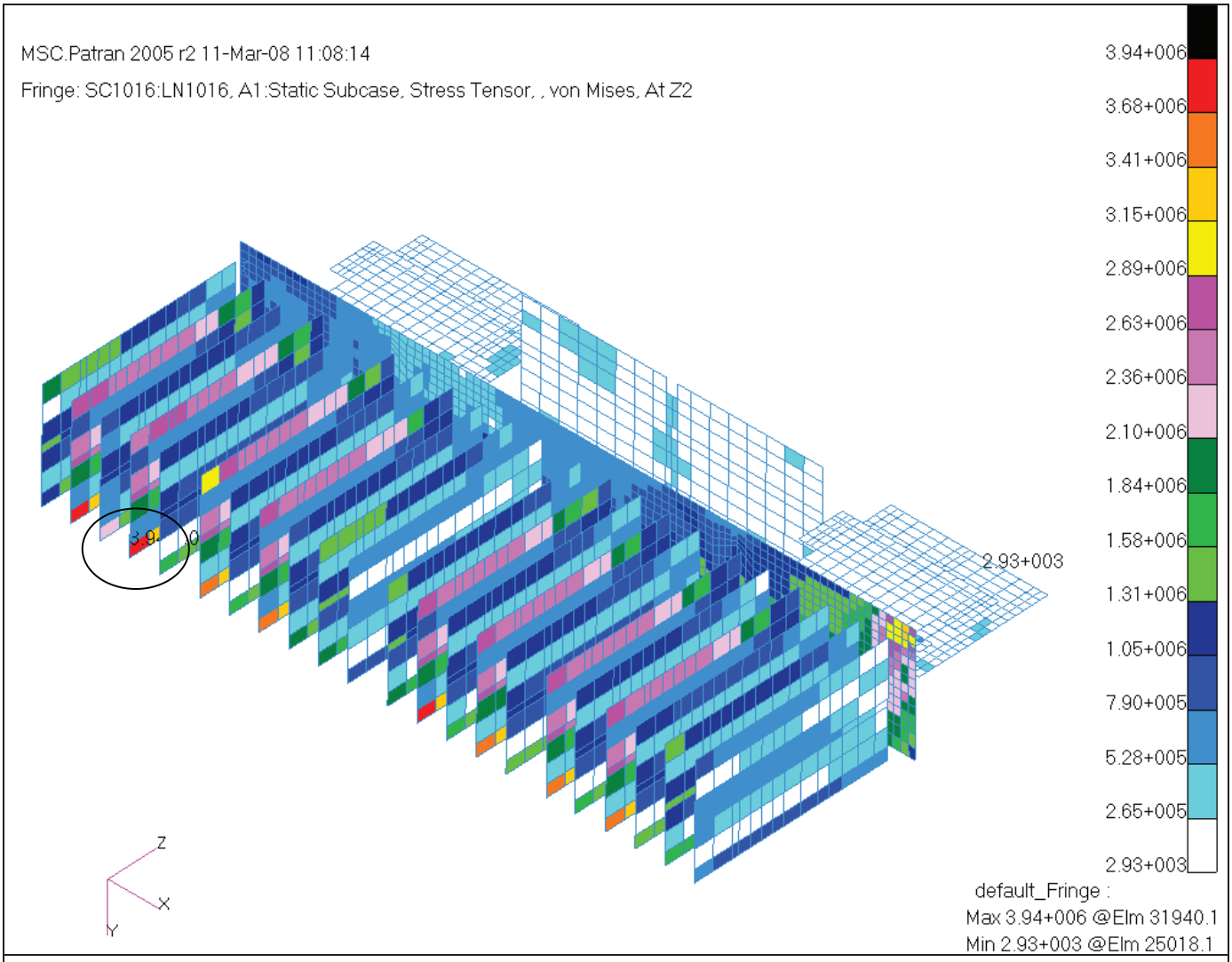

Figure 10-21: Electronics Von Mises stress, Load Case 1016, Layer Z2

Questo documento contiene informazioni di proprietà di CARLO GAVAZZI SPACE SpA. Tutti i diritti sono riservati.
All information contained in this document are property of CARLO GAVAZZI SPACE SpA. All right reserved.

10.2.3 JOINT ANALYSIS IN FLIGHT CONFIGURATION

The analysis of the joints shall be divided in five different kinds of connections.

JOINT #	DESCRIPTION	MATERIAL	BOLT TYPE				ANALYSIS PAGE
			NAME	DIAM.	PICH	LENGHT	
JOINT 1	INTERFACE	A286 160Ksi	NAS 1351N3-8	0.19 inch	32 pitch/inch	1/2	65
JOINT 2	BOX WALLS	A286 160Ksi	NAS 1352N08	0.164 inch	32 pitch/inch	3/8; 1/2; 5/8; 3/4	67
JOINT 3	BOX WALLS	AISI 304	MS24671-14	0.164 inch	32 pitch/inch	1/2	69
JOINT 4	BOX WALLS	A286 160Ksi	NAS1351N3	0.19 inch	32 pitch/inch	1/2; 5/8	71
JOINT 5	LINKS	A286 160Ksi	NAS 1351N3-8	0.19 inch	32 pitch/inch	1/2	73

Table 10-7: Joint description

Description of margins of safety is shown in Chapter 10.1.3 .

Fail safe is reported after each nominal analysis.

Summary of nominal and fail safe analyses are shown in Chapter 10.4.2 MOS SUMMARY FOR JOINTS IN FLIGHT CONFIGURATION.

Questo documento contiene informazioni di proprietà di CARLO GAVAZZI SPACE SpA. Tutti i diritti sono riservati.
All information contained in this document are property of CARLO GAVAZZI SPACE SpA. All right reserved.

10.2.3.1 JOINT 1

In the following figures the forces applied to the joint are shown:

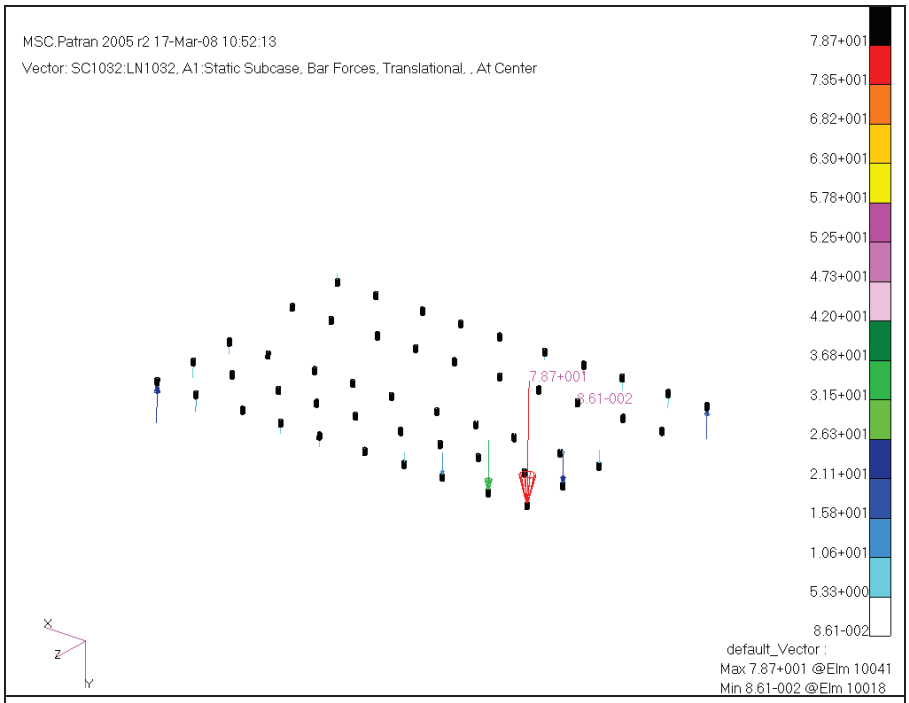

Figure 10-22: Joint 1 critical axial case (flight)

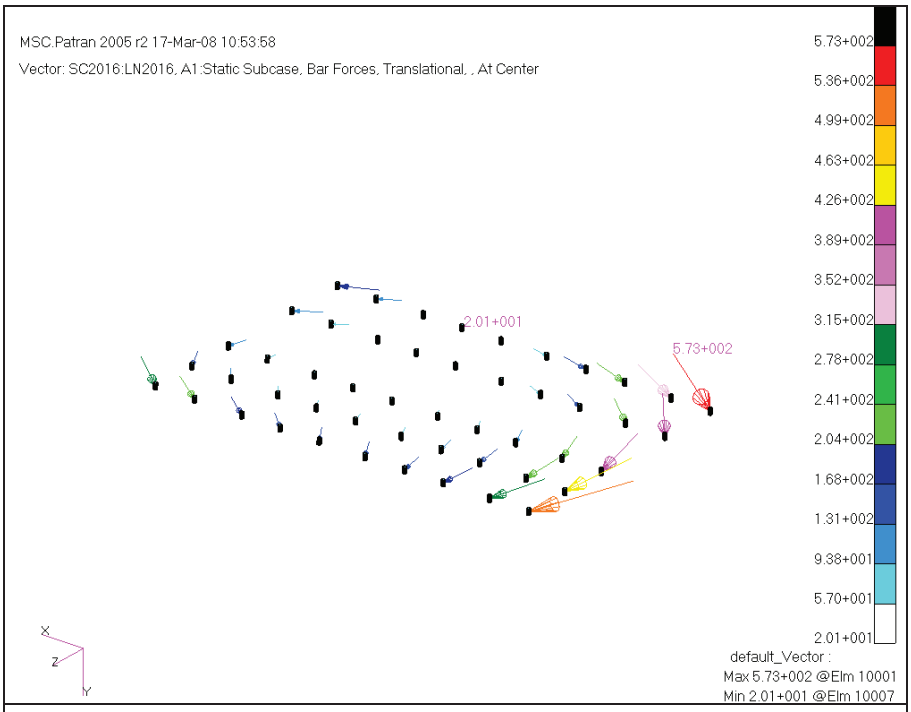

Figure 10-23: Joint 1 critical shear case (flight)

Questo documento contiene informazioni di proprietà di CARLO GAVAZZI SPACE SpA. Tutti i diritti sono riservati.
All information contained in this document are property of CARLO GAVAZZI SPACE SpA. All right reserved.

JUNCTION PROPERTIES	
BOLT	NAS1351N3
WASHER 1	NA
WASHER 2	NA
NUT	MS21060L3
INSERT	NA
INSERT IN FLANGE	2
NUMBER OF FLANGES	2
LUBRICATED	YES
FLANGE 1 NAME	INSERT_TYPE_B
FLANGE 1 MATERIAL	AL7075 T7351
FLANGE 1 MATERIAL SPEC	AMS-QQ-A-225/9
FLANGE 1 THICKNESS [in]	NA
FLANGE 1 HOLE DIAMETER [in]	0.21
FLANGE 2 NAME	BASEPLATE
FLANGE 2 MATERIAL	AL7075 T7351
FLANGE 2 MATERIAL SPEC	AMS-QQ-A-250/12
FLANGE 2 THICKNESS [in]	0.118
FLANGE 2 HOLE DIAMETER [in]	0.21

LOADS	
MAX AXIAL - CONFIGURATION ID	NOMINAL
MAX AXIAL - ELEMENT ID	10041
MAX AXIAL - LOAD CASE ID	1032
MAX AXIAL - AXIAL LOAD [lb]	17.8
max axial - axial load [N]	78.7
MAX AXIAL - SHEAR LOAD [lb]	104.0
max axial - shear load [N]	462.4
MAX SHEAR - CONFIGURATION ID	NOMINAL
MAX SHEAR - ELEMENT ID	10001
MAX SHEAR - LOAD CASE ID	2016
MAX SHEAR - AXIAL LOAD [lb]	-4.5
max shear - axial load [N]	-19.9
MAX SHEAR - SHEAR LOAD [lb]	128.9
max shear - shear load [N]	573.1
MAX COMBINED - CONFIGURATION ID	NOMINAL
MAX COMBINED - ELEMENT ID	SAME AS MAX SHEAR
MAX COMBINED - LOAD CASE ID	
MAX COMBINED - AXIAL LOAD [lb]	
max combined - axial load [N]	
MAX COMBINED - SHEAR LOAD [lb]	
max combined - shear load [N]	

FACTORS OF SAFETY	
ULTIMATE (for nominal configuration)	2.0
ULTIMATE (for fail safe configuration)	1.0
YIELD (only for nominal configuration)	1.25
JOINT SEPARATION (for nominal configuration)	1.2
JOINT SEPARATION (for fail safe configuration)	1.0
FITTING FACTOR	1.15

BOLT & INSERT DATA	
NOMINAL DIAMETER OF BOLT [in]	0.19
NUMBER OF THREADS/INCH [1/in]	32
TOTAL LENGHT OF BOLT [in]	0.5
LENGHT OF INSERT [in]	NA
THREADED LENGHT [in]	0.5
MIN EXT DIAMETER OF INSERT [in]	NA
DEPTH OF RECESS FOR INSERT [in]	NA
HEIGHT OF NUT [in]	0.25

WASHER DATA	
THICKNESS OF WASHER [in]	NA
OUTER DIAMETER OF WASHER [in]	NA
INNER DIAMETER OF WASHER [in]	NA
BOLT HEAD DIAMETER [in]	NA

FLANGE DATA	
THICK OF FLANGE 1 [in]	NA
THICK OF FLANGE 2 [in]	0.118
DIAMETER OF HOLE [in]	0.21

BOLT MATERIAL PROPERTY DATA	
TEMP FACTOR FOR ULTIMATE STRENGHT	0.94
TEMP FACTOR FOR YIELD STRENGHT	0.94
ULTIMATE TENSILE ALLOWABLE STRESS [ksi]	160
YIELD TENSILE ALLOWABLE STRESS [ksi]	110
TEMP FACTOR FOR MODULUS	0.94
MODULUS OF ELASTICITY [ksi]	29100
THERMAL COEFF - HOT [1E(-6)/deg]	9.1
THERMAL COEFF - COLD [1E(-6)/deg]	7.8

INSERT MATERIAL PROPERTY DATA	
TEMP FACTOR FOR ULTIMATE STRENGHT	0.94
ULTIMATE TENSILE ALLOWABLE STRESS [ksi]	NA

NUT MATERIAL PROPERTY DATA	
TEMP FACTOR FOR ULTIMATE STRENGHT	0.94
TENSILE ULTIMATE ALLOWABLE STRESS [psi]	125000
ULTIMATE AXIAL LOAD [lb]	6470

WASHER MATERIAL PROPERTY DATA	
TEMP FACTOR FOR MODULUS	1
MODULUS OF ELASTICITY [ksi]	29100

FLANGE MATERIAL PROPERTY DATA	
TEMP FACTOR FOR MODULUS OF FLANGE 1	0.94
TEMP FACTOR FOR MODULUS OF FLANGE 2	0.94
TEMP FACTOR FOR ULTIMATE STRENGHT OF FLANGE 2	0.94
ULTIMATE SHEAR ALLOWABLE STRESS OF FLANGE 2 [psi]	NA
MODULUS OF ELASTICITY FOR FLANGE 1 [ksi]	10500
MODULUS OF ELASTICITY FOR FLANGE 2 [ksi]	10500
THERMAL COEFF OF FLANGE 1 - HOT [1E(-6)/deg]	12.15
THERMAL COEFF OF FLANGE 1 - COLD [1E(-6)/deg]	11.15
THERMAL COEFF OF FLANGE 2 - HOT [1E(-6)/deg]	12.15
THERMAL COEFF OF FLANGE 2 - COLD [1E(-6)/deg]	11.15
ULTIMATE BEARING ALLOWABLE STRESS FOR FLANGE 1 [psi]	NA
YIELD BEARING ALLOWABLE STRESS FOR FLANGE 1 [psi]	NA
ULTIMATE BEARING ALLOWABLE STRESS FOR FLANGE 2 [psi]	95870
YIELD BEARING ALLOWABLE STRESS FOR FLANGE 2 [psi]	74260

TORQUE AND PRELOAD DATA	
MAX TORQUE [lb in]	28.0
max torque [N m]	3.2
MIN TORQUE [lb in]	26.0
min torque [N m]	2.9
COEFFICIENT OF UTILIZATION [%]	64
LOADING PLANE FACTOR	0.5
PRELOAD UNCETRAINTY	0.25
TORQUE COEFFICIENT	0.15

NOMINAL CONFIGURATION SUMMARY OF MARGINS FOR BOLTS	
MOS CALCULATION - CONFIGURATION ID	NOMINAL
JOINT SEPARATION	29.78 (MAX AXIAL)
DIRECT TENSION ULTIMATE	69.71 (MAX AXIAL)
DIRECT TENSION YIELD	76.78 (MAX AXIAL)
TOTAL TENSION ULTIMATE	1.25 (MAX AXIAL)
TOTAL TENSION YIELD	0.55 (MAX AXIAL)
DIRECT THREAD SHEAR ULTIMATE	83.86 (MAX AXIAL)
TOTAL THREAD SHEAR ULTIMATE	1.7 (MAX AXIAL)
SHEAR ULTIMATE	4.34 (MAX SHEAR)
BENDING ULTIMATE	> 10
COMBINED SHEAR, TENSION AND BENDING ULTIMATE	1.19 (MAX SHEAR)
NOMINAL CONFIGURATION MINIMUM MOS	0.55
NOMINAL CONFIGURATION MINIMUM ULTIMATE MOS	1.19

NOMINAL CONFIGURATION SUMMARY OF MARGINS FOR BEARING FLANGES	
FLANGE 1 - BEARING ULTIMATE	NA
FLANGE 1 - BEARING YIELD	
FLANGE 2 - BEARING ULTIMATE	7.01
FLANGE 2 - BEARING YIELD	8.93
NOMINAL CONFIGURATION MINIMUM MOS	7.01 (ULT-FL 2)

FAIL SAFE CONFIGURATION IDENTIFICATION	
FAIL SAFE FAILED BOLT CONFIGURATION	FLIGHT FAIL SAFE
FAIL SAFE 1 FAILED BOLT ID	10001

FAIL SAFE CONFIGURATION BOLT LOADS	
MAX AXIAL - ELEMENT ID	10041
MAX AXIAL - LOAD CASE ID	1032
MAX AXIAL - AXIAL LOAD [lb]	17.8
max axial - axial load [N]	78.8
MAX AXIAL - SHEAR LOAD [lb]	108.3
max axial - shear load [N]	481.3
MAX SHEAR - ELEMENT ID	10041
MAX SHEAR - LOAD CASE ID	2032
MAX SHEAR - AXIAL LOAD [lb]	16.4
max shear - axial load [N]	72.6
MAX SHEAR - SHEAR LOAD [lb]	128.9
max shear - shear load [N]	573.4
MAX COMBINED - LOAD CASE ID	SAME AS MAX SHEAR
MAX COMBINED - AXIAL LOAD [lb]	
max combined - axial load [N]	
MAX COMBINED - SHEAR LOAD [lb]	
max combined - shear load [N]	

FAIL SAFE CONFIGURATION SUMMARY OF MARGINS FOR BOLTS	
MOS CALCULATION - CONFIGURATION ID	FLIGHT FAIL SAFE
JOINT SEPARATION	32.93 (MAX AXIAL)
DIRECT TENSION ULTIMATE	140.43 (MAX AXIAL)
TOTAL TENSION ULTIMATE	1.26 (MAX AXIAL)
DIRECT THREAD SHEAR ULTIMATE	168.71 (MAX AXIAL)
TOTAL THREAD SHEAR ULTIMATE	1.71 (MAX AXIAL)
SHEAR ULTIMATE	9.76 (MAX SHEAR)
BENDING ULTIMATE	> 10
COMBINED SHEAR, TENSION AND BENDING ULTIMATE	1.25 (MAX SHEAR)
FAIL SAFE CONFIGURATION MINIMUM ULTIMATE MOS	1.25

FAIL SAFE CONFIGURATION SUMMARY OF MARGINS FOR BEARING FLANGES	
FLANGE 1 - BEARING ULTIMATE	NA
FLANGE 2 - BEARING ULTIMATE	>10
FAIL SAFE CONFIGURATION MINIMUM MOS	>10

Table 10-8: Joint 1 nominal and fail safe analyses (flight)

Questo documento contiene informazioni di proprietà di CARLO GAVAZZI SPACE SpA. Tutti i diritti sono riservati.
All information contained in this document are property of CARLO GAVAZZI SPACE SpA. All right reserved.

10.2.3.2 JOINT 2

In the following figures the forces applied to the joint are shown:

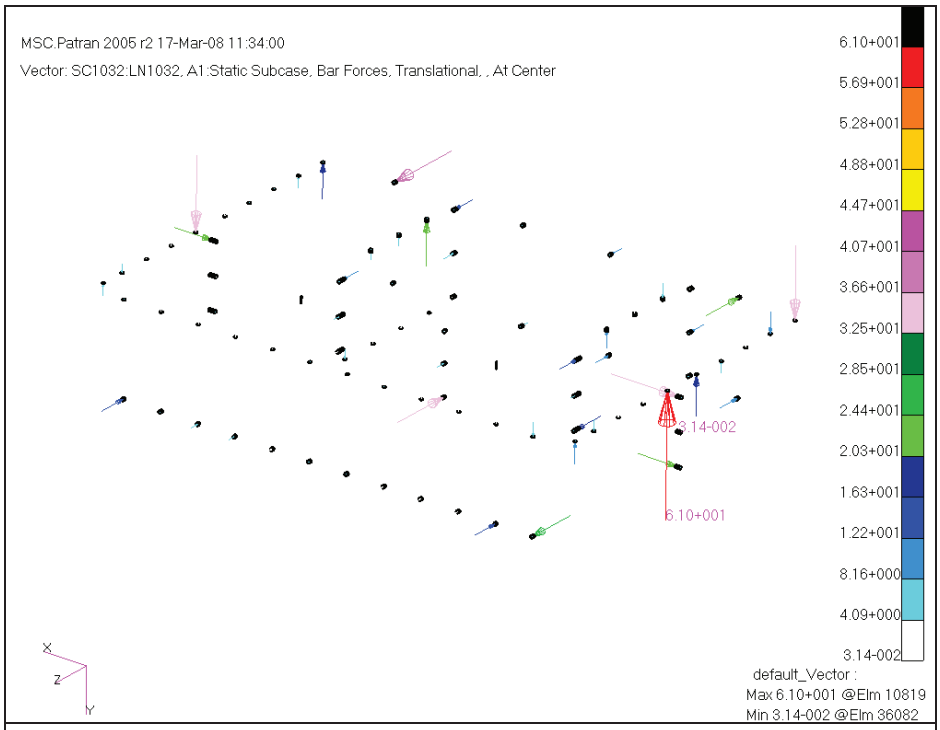

Figure 10-24: Joint 2 critical axial case (flight)

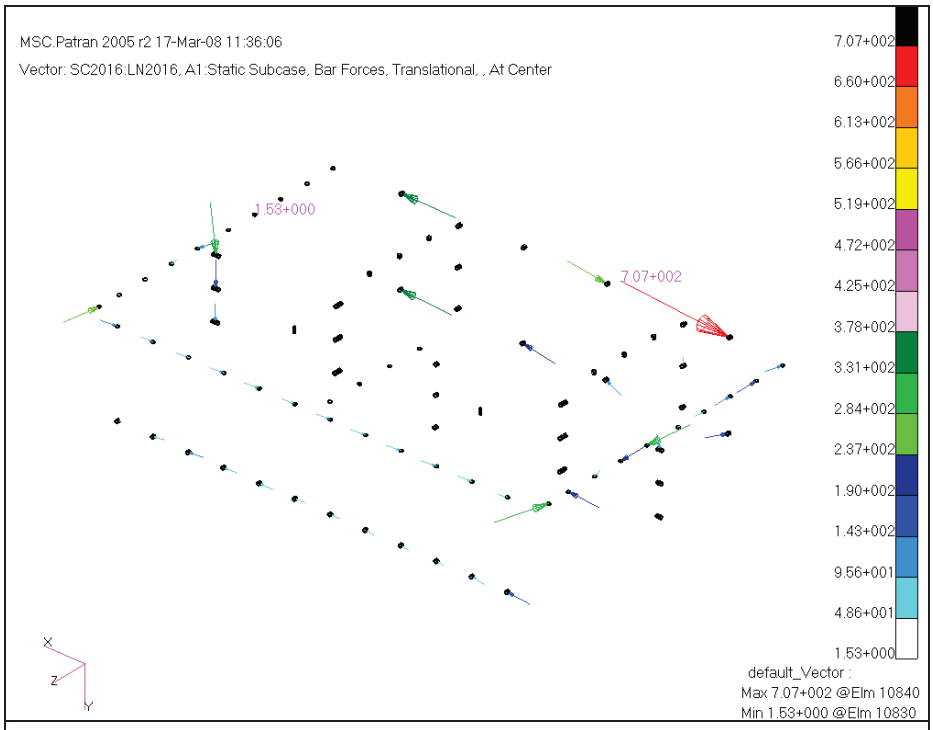

Figure 10-25: Joint 2 critical shear case (flight)

Questo documento contiene informazioni di proprietà di CARLO GAVAZZI SPACE SpA. Tutti i diritti sono riservati.
All information contained in this document are property of CARLO GAVAZZI SPACE SpA. All right reserved.

JUNCTION PROPERTIES	
BOLT	NAS1352N08
WASHER 1	NAS620 C08
WASHER 2	NA
NUT	NA
INSERT	MS21209 C08-10
INSERT IN FLANGE	2
NUMBER OF FLANGES	2
LUBRICATED	NO
FLANGE 1 NAME	PDS WALLS
FLANGE 1 MATERIAL	Al7075T7351
FLANGE 1 MATERIAL SPEC	AMS-QQ-A-250/12
FLANGE 1 THICKNESS [in]	0.138
FLANGE 1 HOLE DIAMETER [in]	0.18
FLANGE 2 NAME	PDS WALLS
FLANGE 2 MATERIAL	Al7075T7351
FLANGE 2 MATERIAL SPEC	AMS-QQ-A-250/12
FLANGE 2 THICKNESS [in]	0.246
FLANGE 2 HOLE DIAMETER [in]	0.18

LOADS	
MAX AXIAL - CONFIGURATION ID	NOMINAL
MAX AXIAL - ELEMENT ID	10819
MAX AXIAL - LOAD CASE ID	1032
MAX AXIAL - AXIAL LOAD [lb]	13.8
max axial - axial load [N]	61.0
MAX AXIAL - SHEAR LOAD [lb]	62.6
max axial - shear load [N]	278.2
MAX SHEAR - CONFIGURATION ID	NOMINAL
MAX SHEAR - ELEMENT ID	10840
MAX SHEAR - LOAD CASE ID	2016
MAX SHEAR - AXIAL LOAD [lb]	-5.1
max shear - axial load [N]	-22.7
MAX SHEAR - SHEAR LOAD [lb]	159.0
max shear - shear load [N]	707.2
MAX COMBINED - CONFIGURATION ID	NOMINAL
MAX COMBINED - ELEMENT ID	SAME AS MAX SHEAR
MAX COMBINED - LOAD CASE ID	
MAX COMBINED - AXIAL LOAD [lb]	
max combined - axial load [N]	
MAX COMBINED - SHEAR LOAD [lb]	
max combined - shear load [N]	

FACTORS OF SAFETY	
ULTIMATE (for nominal configuration)	2.0
ULTIMATE (for fail safe configuration)	1.0
YIELD (only for nominal configuration)	1.25
JOINT SEPARATION (for nominal configuration)	1.2
JOINT SEPARATION (for fail safe configuration)	1.0
FITTING FACTOR	1.15

BOLT & INSERT DATA	
NOMINAL DIAMETER OF BOLT [in]	0.164
NUMBER OF THREADS/INCH [1/in]	32
TOTAL LENGHT OF BOLT [in]	0.5
LENGHT OF INSERT [in]	0.246
THREADED LENGHT [in]	0.5
MIN EXT DIAMETER OF INSERT [in]	0.205
DEPTH OF RECESS FOR INSERT [in]	0.02
HEIGHT OF NUT [in]	NA

WASHER DATA	
THICKNESS OF WASHER [in]	0.032
OUTER DIAMETER OF WASHER [in]	0.304
INNER DIAMETER OF WASHER [in]	0.169
BOLT HEAD DIAMETER [in]	0.27

FLANGE DATA	
THICK OF FLANGE 1 [in]	0.138
THICK OF FLANGE 2 [in]	0.246
DIAMETER OF HOLE [in]	0.18

BOLT MATERIAL PROPERTY DATA	
TEMP FACTOR FOR ULTIMATE STRENGHT	0.94
TEMP FACTOR FOR YIELD STRENGHT	0.94
ULTIMATE TENSILE ALLOWABLE STRESS [ksi]	160
YIELD TENSILE ALLOWABLE STRESS [ksi]	110
TEMP FACTOR FOR MODULUS	0.94
MODULUS OF ELASTICITY [ksi]	29100
THERMAL COEFF - HOT [1E(-6)/deg]	9.1
THERMAL COEFF - COLD [1E(-6)/deg]	7.8

INSERT MATERIAL PROPERTY DATA	
TEMP FACTOR FOR ULTIMATE STRENGHT	0.94
ULTIMATE TENSILE ALLOWABLE STRESS [ksi]	150

NUT MATERIAL PROPERTY DATA	
TEMP FACTOR FOR ULTIMATE STRENGHT	NA
TENSILE ULTIMATE ALLOWABLE STRESS [psi]	NA
ULTIMATE AXIAL LOAD [lb]	NA

WASHER MATERIAL PROPERTY DATA	
TEMP FACTOR FOR MODULUS	1
MODULUS OF ELASTICITY [ksi]	29100

FLANGE MATERIAL PROPERTY DATA	
TEMP FACTOR FOR MODULUS OF FLANGE 1	0.94
TEMP FACTOR FOR MODULUS OF FLANGE 2	0.94
TEMP FACTOR FOR ULTIMATE STRENGHT OF FLANGE 2	0.94
ULTIMATE SHEAR ALLOWABLE STRESS OF FLANGE 2 [psi]	27000
MODULUS OF ELASTICITY FOR FLANGE 1 [ksi]	10500
MODULUS OF ELASTICITY FOR FLANGE 2 [ksi]	10500
THERMAL COEFF OF FLANGE 1 - HOT [1E(-6)/deg]	12.15
THERMAL COEFF OF FLANGE 1 - COLD [1E(-6)/deg]	11.5
THERMAL COEFF OF FLANGE 2 - HOT [1E(-6)/deg]	12.15
THERMAL COEFF OF FLANGE 2 - COLD [1E(-6)/deg]	11.5
ULTIMATE BEARING ALLOWABLE STRESS FOR FLANGE 1 [psi]	95870
YIELD BEARING ALLOWABLE STRESS FOR FLANGE 1 [psi]	74260
ULTIMATE BEARING ALLOWABLE STRESS FOR FLANGE 2 [psi]	95870
YIELD BEARING ALLOWABLE STRESS FOR FLANGE 2 [psi]	74260

TORQUE AND PRELOAD DATA	
MAX TORQUE [lb in]	20.0
max torque [N m]	2.3
MIN TORQUE [lb in]	18.0
min torque [N m]	2.0
COEFFICIENT OF UTILIZATION [%]	63
LOADING PLANE FACTOR	0.5
PRELOAD UNCETRAINTY	0.35
TORQUE COEFFICIENT	0.2

NOMINAL CONFIGURATION SUMMARY OF MARGINS FOR BOLTS	
MOS CALCULATION - CONFIGURATION ID	NOMINAL
JOINT SEPARATION	15.57 (MAX AXIAL)
DIRECT TENSION ULTIMATE	62.43 (MAX AXIAL)
DIRECT TENSION YIELD	68.77 (MAX AXIAL)
TOTAL TENSION ULTIMATE	1.259 (MAX SHEAR)
TOTAL TENSION YIELD	0.57 (MAX AXIAL)
DIRECT THREAD SHEAR ULTIMATE	60.32 (MAX AXIAL)
TOTAL THREAD SHEAR ULTIMATE	1.2 (MAX AXIAL)
SHEAR ULTIMATE	1.95 (MAX SHEAR)
BENDING ULTIMATE	> 10
COMBINED SHEAR, TENSION AND BENDING ULTIMATE	0.937 (MAX SHEAR)
NOMINAL CONFIGURATION MINIMUM MOS	0.57
NOMINAL CONFIGURATION MINIMUM ULTIMATE MOS	0.94

NOMINAL CONFIGURATION SUMMARY OF MARGINS FOR BEARING FLANGES	
FLANGE 1 - BEARING ULTIMATE	5.51
FLANGE 1 - BEARING YIELD	7.07
FLANGE 2 - BEARING ULTIMATE	>10
FLANGE 2 - BEARING YIELD	>10
NOMINAL CONFIGURATION MINIMUM MOS	5.51 (ULT-FL 1)

FAIL SAFE CONFIGURATION IDENTIFICATION	
FAIL SAFE FAILED BOLT CONFIGURATION	FLIGHT FAIL SAFE
FAIL SAFE 1 FAILED BOLT ID	10840

FAIL SAFE CONFIGURATION BOLT LOADS	
MAX AXIAL - ELEMENT ID	10819
MAX AXIAL - LOAD CASE ID	1032
MAX AXIAL - AXIAL LOAD [lb]	13.7
max axial - axial load [N]	60.9
MAX AXIAL - SHEAR LOAD [lb]	64.5
max axial - shear load [N]	286.9
MAX SHEAR - ELEMENT ID	10841
MAX SHEAR - LOAD CASE ID	2016
MAX SHEAR - AXIAL LOAD [lb]	3.7
max shear - axial load [N]	16.4
MAX SHEAR - SHEAR LOAD [lb]	123.9
max shear - shear load [N]	550.8
MAX COMBINED - LOAD CASE ID	SAME AS MAX SHEAR
MAX COMBINED - AXIAL LOAD [lb]	
max combined - axial load [N]	
MAX COMBINED - SHEAR LOAD [lb]	
max combined - shear load [N]	

FAIL SAFE CONFIGURATION SUMMARY OF MARGINS FOR BOLTS	
MOS CALCULATION - CONFIGURATION ID	FLIGHT FAIL SAFE
JOINT SEPARATION	19.03 (MAX AXIAL)
DIRECT TENSION ULTIMATE	126.79 (MAX AXIAL)
TOTAL TENSION ULTIMATE	1.29 (MAX AXIAL)
DIRECT THREAD SHEAR ULTIMATE	122.54 (MAX AXIAL)
TOTAL THREAD SHEAR ULTIMATE	1.21 (MAX AXIAL)
SHEAR ULTIMATE	6.58 (MAX SHEAR)
BENDING ULTIMATE	> 10
COMBINED SHEAR, TENSION AND BENDING ULTIMATE	1.26 (MAX SHEAR)
FAIL SAFE CONFIGURATION MINIMUM ULTIMATE MOS	1.21

FAIL SAFE CONFIGURATION SUMMARY OF MARGINS FOR BEARING FLANGES	
FLANGE 1 - BEARING ULTIMATE	>10
FLANGE 2 - BEARING ULTIMATE	>10
FAIL SAFE CONFIGURATION MINIMUM MOS	>10

Table 10-9: Joint 2 nominal and fail safe analyses (flight)

Questo documento contiene informazioni di proprietà di CARLO GAVAZZI SPACE SpA. Tutti i diritti sono riservati.
All information contained in this document are property of CARLO GAVAZZI SPACE SpA. All right reserved.

10.2.3.3 JOINT 3

In the following figures the forces applied to the joint are shown:

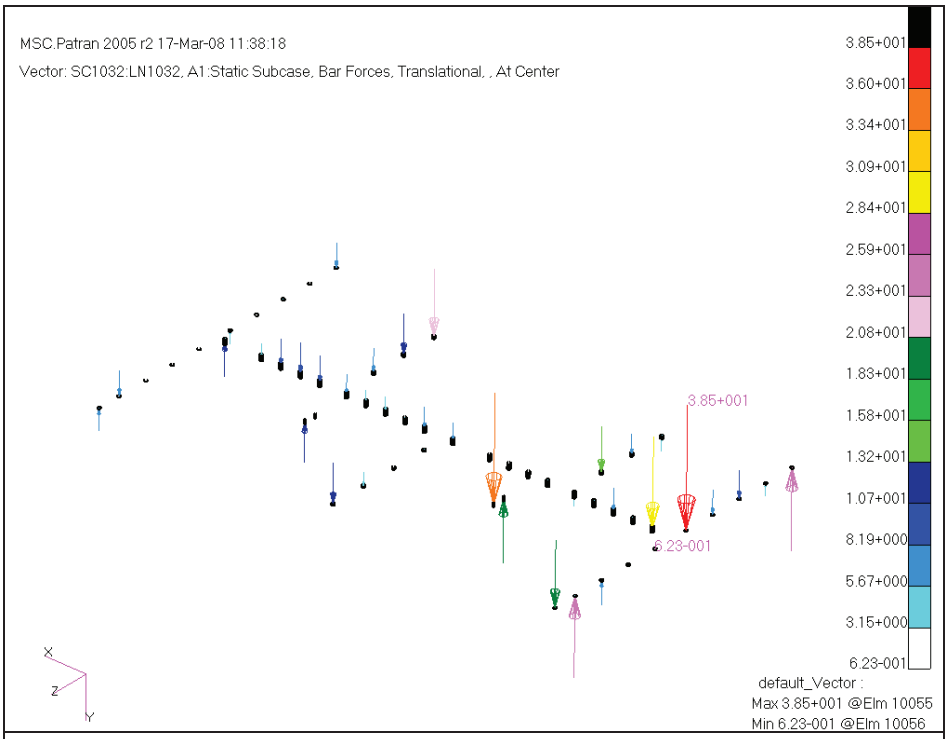

Figure 10-26: Joint 3 critical axial case (flight)

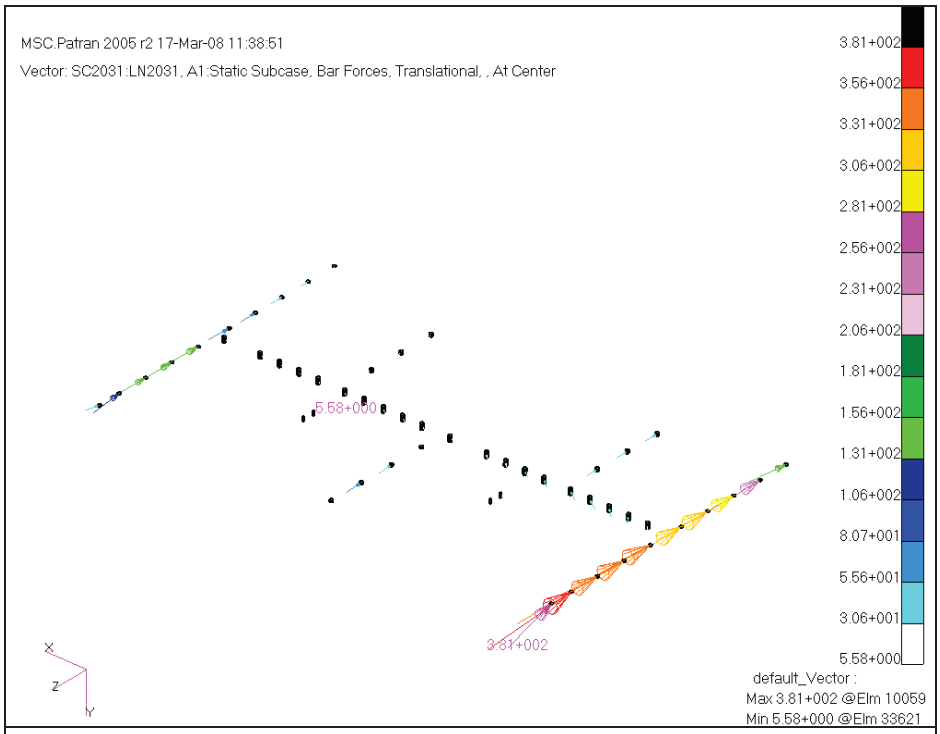

Figure 10-27: Joint 3 critical shear case (flight)

Questo documento contiene informazioni di proprietà di CARLO GAVAZZI SPACE SpA. Tutti i diritti sono riservati.
All information contained in this document are property of CARLO GAVAZZI SPACE SpA. All right reserved.

JUNCTION PROPERTIES	
BOLT	MS24671
WASHER 1	NA
WASHER 2	NA
NUT	NA
INSERT	MS21209 C08-10
INSERT IN FLANGE	2
NUMBER OF FLANGES	2
LUBRICATED	NO
FLANGE 1 NAME	PDS WALLS
FLANGE 1 MATERIAL	Al7075T7351
FLANGE 1 MATERIAL SPEC	AMS-QQ-A-250/12
FLANGE 1 THICKNESS [in]	0.138
FLANGE 1 HOLE DIAMETER [in]	0.18
FLANGE 2 NAME	PDS WALLS
FLANGE 2 MATERIAL	Al7075T7351
FLANGE 2 MATERIAL SPEC	AMS-QQ-A-250/12
FLANGE 2 THICKNESS [in]	0.246
FLANGE 2 HOLE DIAMETER [in]	0.18

LOADS	
MAX AXIAL - CONFIGURATION ID	NOMINAL
MAX AXIAL - ELEMENT ID	10055
MAX AXIAL - LOAD CASE ID	1032
MAX AXIAL - AXIAL LOAD [lb]	8.7
max axial - axial load [N]	38.5
MAX AXIAL - SHEAR LOAD [lb]	68.6
max axial - shear load [N]	304.7
MAX SHEAR - CONFIGURATION ID	NOMINAL
MAX SHEAR - ELEMENT ID	10059
MAX SHEAR - LOAD CASE ID	2031
MAX SHEAR - AXIAL LOAD [lb]	6.1
max shear - axial load [N]	27.0
MAX SHEAR - SHEAR LOAD [lb]	85.7
max shear - shear load [N]	381.0
MAX COMBINED - CONFIGURATION ID	NOMINAL
MAX COMBINED - ELEMENT ID	SAME AS MAX SHEAR
MAX COMBINED - LOAD CASE ID	
MAX COMBINED - AXIAL LOAD [lb]	
max combined - axial load [N]	
MAX COMBINED - SHEAR LOAD [lb]	
max combined - shear load [N]	

FACTORS OF SAFETY	
ULTIMATE (for nominal configuration)	2.0
ULTIMATE (for fail safe configuration)	1.0
YIELD (only for nominal configuration)	1.25
JOINT SEPARATION (for nominal configuration)	1.2
JOINT SEPARATION (for fail safe configuration)	1.0
FITTING FACTOR	1.15

BOLT & INSERT DATA	
NOMINAL DIAMETER OF BOLT [in]	0.164
NUMBER OF THREADS/INCH [1/in]	32
TOTAL LENGHT OF BOLT [in]	0.5
LENGHT OF INSERT [in]	0.246
THREADED LENGHT [in]	0.5
MIN EXT DIAMETER OF INSERT [in]	0.205
DEPTH OF RECESS FOR INSERT [in]	0.02
HEIGHT OF NUT [in]	NA

WASHER DATA	
THICKNESS OF WASHER [in]	NA
OUTER DIAMETER OF WASHER [in]	NA
INNER DIAMETER OF WASHER [in]	NA
BOLT HEAD DIAMETER [in]	0.359

FLANGE DATA	
THICK OF FLANGE 1 [in]	0.138
THICK OF FLANGE 2 [in]	0.246
DIAMETER OF HOLE [in]	0.18

BOLT MATERIAL PROPERTY DATA	
TEMP FACTOR FOR ULTIMATE STRENGHT	0.94
TEMP FACTOR FOR YIELD STRENGHT	0.94
ULTIMATE TENSILE ALLOWABLE STRESS [ksi]	80
YIELD TENSILE ALLOWABLE STRESS [ksi]	60
TEMP FACTOR FOR MODULUS	0.94
MODULUS OF ELASTICITY [ksi]	29100
THERMAL COEFF - HOT [1E(-6)/deg]	9.1
THERMAL COEFF - COLD [1E(-6)/deg]	7.8

INSERT MATERIAL PROPERTY DATA	
TEMP FACTOR FOR ULTIMATE STRENGHT	0.94
ULTIMATE TENSILE ALLOWABLE STRESS [ksi]	150

NUT MATERIAL PROPERTY DATA	
TEMP FACTOR FOR ULTIMATE STRENGHT	NA
TENSILE ULTIMATE ALLOWABLE STRESS [psi]	NA
ULTIMATE AXIAL LOAD [lb]	NA

WASHER MATERIAL PROPERTY DATA	
TEMP FACTOR FOR MODULUS	1
MODULUS OF ELASTICITY [ksi]	29100

FLANGE MATERIAL PROPERTY DATA	
TEMP FACTOR FOR MODULUS OF FLANGE 1	0.94
TEMP FACTOR FOR MODULUS OF FLANGE 2	0.94
TEMP FACTOR FOR ULTIMATE STRENGHT OF FLANGE 2	0.94
ULTIMATE SHEAR ALLOWABLE STRESS OF FLANGE 2 [psi]	27000
MODULUS OF ELASTICITY FOR FLANGE 1 [ksi]	10500
MODULUS OF ELASTICITY FOR FLANGE 2 [ksi]	10500
THERMAL COEFF OF FLANGE 1 - HOT [1E(-6)/deg]	12.15
THERMAL COEFF OF FLANGE 1 - COLD [1E(-6)/deg]	11.5
THERMAL COEFF OF FLANGE 2 - HOT [1E(-6)/deg]	12.15
THERMAL COEFF OF FLANGE 2 - COLD [1E(-6)/deg]	11.5
ULTIMATE BEARING ALLOWABLE STRESS FOR FLANGE 1 [psi]	95870
YIELD BEARING ALLOWABLE STRESS FOR FLANGE 1 [psi]	74260
ULTIMATE BEARING ALLOWABLE STRESS FOR FLANGE 2 [psi]	95870
YIELD BEARING ALLOWABLE STRESS FOR FLANGE 2 [psi]	74260

TORQUE AND PRELOAD DATA	
MAX TORQUE [lb in]	11.0
max torque [N m]	1.2
MIN TORQUE [lb in]	10.5
min torque [N m]	1.2
COEFFICIENT OF UTILIZATION [%]	66
LOADING PLANE FACTOR	0.5
PRELOAD UNCETRAINTY	0.35
TORQUE COEFFICIENT	0.2

NOMINAL CONFIGURATION SUMMARY OF MARGINS FOR BOLTS	
MOS CALCULATION - CONFIGURATION ID	NOMINAL
JOINT SEPARATION	11.18 (MAX AXIAL)
DIRECT TENSION ULTIMATE	51.65 (MAX AXIAL)
DIRECT TENSION YIELD	62.18 (MAX AXIAL)
TOTAL TENSION ULTIMATE	1.01 (MAX AXIAL)
TOTAL TENSION YIELD	0.508 (MAX AXIAL)
DIRECT THREAD SHEAR ULTIMATE	96.27 (MAX AXIAL)
TOTAL THREAD SHEAR ULTIMATE	2.71 (MAX AXIAL)
SHEAR ULTIMATE	1.74 (MAX SHEAR)
BENDING ULTIMATE	> 10
COMBINED SHEAR, TENSION AND BENDING ULTIMATE	0.736 (MAX SHEAR)
NOMINAL CONFIGURATION MINIMUM MOS	0.51
NOMINAL CONFIGURATION MINIMUM ULTIMATE MOS	0.74

NOMINAL CONFIGURATION SUMMARY OF MARGINS FOR BEARING FLANGES	
FLANGE 1 - BEARING ULTIMATE	>10
FLANGE 1 - BEARING YIELD	>10
FLANGE 2 - BEARING ULTIMATE	>10
FLANGE 2 - BEARING YIELD	>10
NOMINAL CONFIGURATION MINIMUM MOS	>10

FAIL SAFE CONFIGURATION IDENTIFICATION	
FAIL SAFE FAILED BOLT CONFIGURATION	FLIGHT FAIL SAFE
FAIL SAFE 1 FAILED BOLT ID	10059

FAIL SAFE CONFIGURATION BOLT LOADS	
MAX AXIAL - ELEMENT ID	10055
MAX AXIAL - LOAD CASE ID	1032
MAX AXIAL - AXIAL LOAD [lb]	8.7
max axial - axial load [N]	38.6
MAX AXIAL - SHEAR LOAD [lb]	70.8
max axial - shear load [N]	314.6
MAX SHEAR - ELEMENT ID	10058
MAX SHEAR - LOAD CASE ID	2031
MAX SHEAR - AXIAL LOAD [lb]	3.1
max shear - axial load [N]	13.5
MAX SHEAR - SHEAR LOAD [lb]	104.1
max shear - shear load [N]	463.0
MAX COMBINED - LOAD CASE ID	SAME AS MAX SHEAR
MAX COMBINED - AXIAL LOAD [lb]	
max combined - axial load [N]	
MAX COMBINED - SHEAR LOAD [lb]	
max combined - shear load [N]	

FAIL SAFE CONFIGURATION SUMMARY OF MARGINS FOR BOLTS	
MOS CALCULATION - CONFIGURATION ID	FLIGHT FAIL SAFE
JOINT SEPARATION	13.61 (MAX AXIAL)
DIRECT TENSION ULTIMATE	104.29 (MAX AXIAL)
TOTAL TENSION ULTIMATE	1.014 (MAX AXIAL)
DIRECT THREAD SHEAR ULTIMATE	193.53 (MAX AXIAL)
TOTAL THREAD SHEAR ULTIMATE	2.72 (MAX AXIAL)
SHEAR ULTIMATE	3.51 (MAX SHEAR)
BENDING ULTIMATE	> 10
COMBINED SHEAR, TENSION AND BENDING ULTIMATE	0.93 (MAX SHEAR)
FAIL SAFE CONFIGURATION MINIMUM ULTIMATE MOS	0.93

FAIL SAFE CONFIGURATION SUMMARY OF MARGINS FOR BEARING FLANGES	
FLANGE 1 - BEARING ULTIMATE	>10
FLANGE 2 - BEARING ULTIMATE	>10
FAIL SAFE CONFIGURATION MINIMUM MOS	>10

Table 10-10: Joint 3 nominal and fail safe analyses (flight)

Questo documento contiene informazioni di proprietà di CARLO GAVAZZI SPACE SpA. Tutti i diritti sono riservati.
All information contained in this document are property of CARLO GAVAZZI SPACE SpA. All right reserved.

10.2.3.4 JOINT 4

In the following figures the forces applied to the joint are shown:

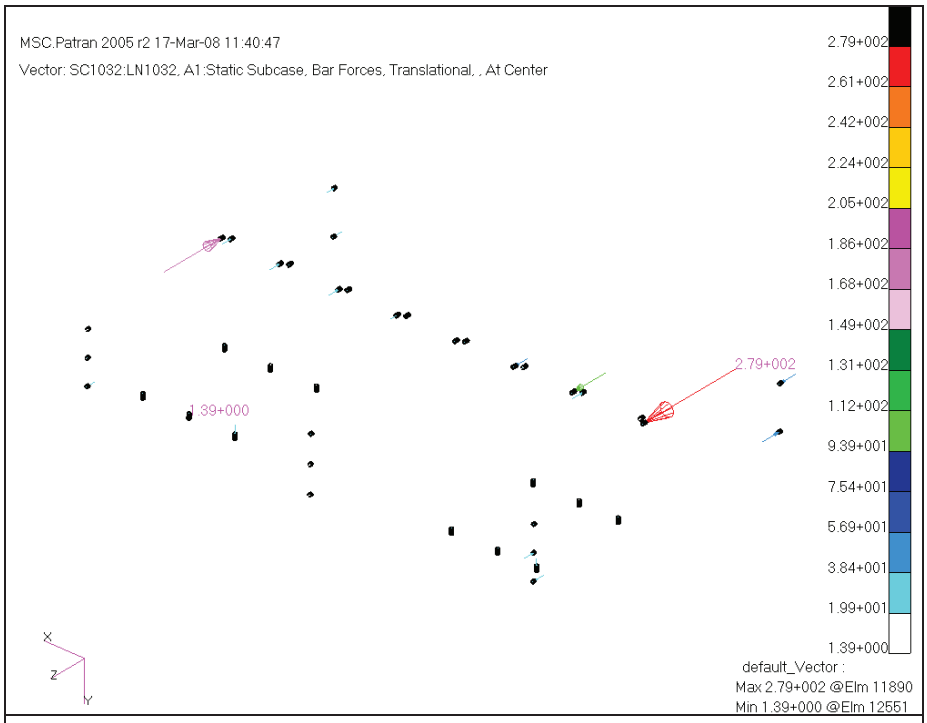

Figure 10-28: Joint 4 critical axial case (flight)

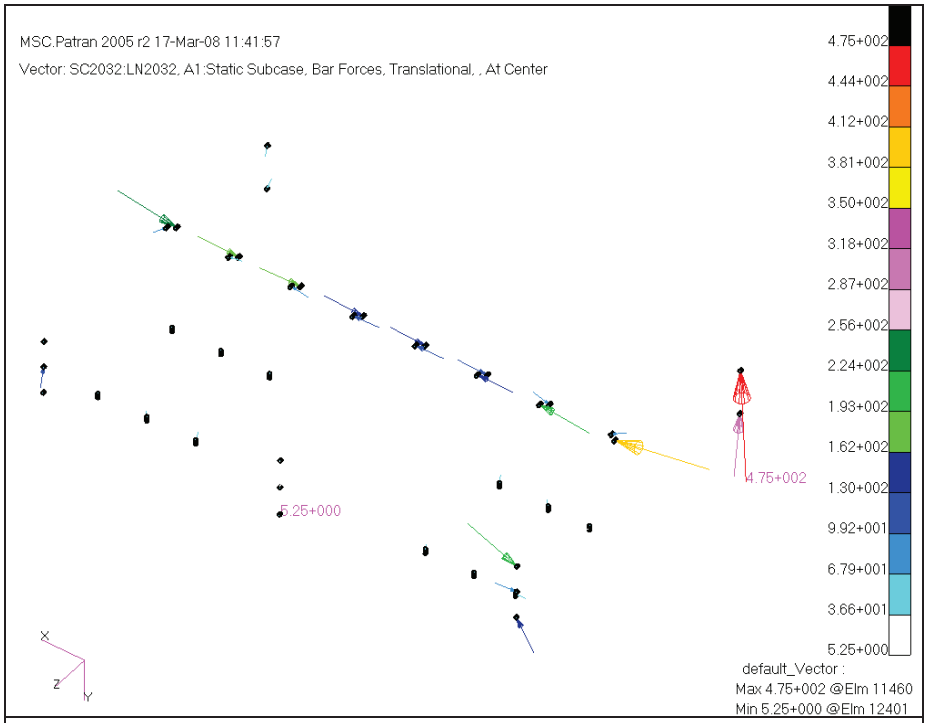

Figure 10-29: Joint 4 critical shear case (flight)

Questo documento contiene informazioni di proprietà di CARLO GAVAZZI SPACE SpA. Tutti i diritti sono riservati.
All information contained in this document are property of CARLO GAVAZZI SPACE SpA. All right reserved.

JUNCTION PROPERTIES	
BOLT	NAS1351N3
WASHER 1	NAS620 C10
WASHER 2	NA
NUT	NA
INSERT	MS21209 F1-10
INSERT IN FLANGE	2
NUMBER OF FLANGES	2
LUBRICATED	NO
FLANGE 1 NAME	PDS WALLS
FLANGE 1 MATERIAL	Al7075T7351
FLANGE 1 MATERIAL SPEC	AMS-QQ-A-250/12
FLANGE 1 THICKNESS [in]	0.118
FLANGE 1 HOLE DIAMETER [in]	0.21
FLANGE 2 NAME	PDS WALLS
FLANGE 2 MATERIAL	Al7075T7351
FLANGE 2 MATERIAL SPEC	AMS-QQ-A-250/12
FLANGE 2 THICKNESS [in]	0.18
FLANGE 2 HOLE DIAMETER [in]	0.21

LOADS	
MAX AXIAL - CONFIGURATION ID	NOMINAL
MAX AXIAL - ELEMENT ID	11890
MAX AXIAL - LOAD CASE ID	1032
MAX AXIAL - AXIAL LOAD [lb]	62.8
max axial - axial load [N]	279.0
MAX AXIAL - SHEAR LOAD [lb]	68.3
max axial - shear load [N]	303.4
MAX SHEAR - CONFIGURATION ID	NOMINAL
MAX SHEAR - ELEMENT ID	11460
MAX SHEAR - LOAD CASE ID	2032
MAX SHEAR - AXIAL LOAD [lb]	1.3
max shear - axial load [N]	5.8
MAX SHEAR - SHEAR LOAD [lb]	106.8
max shear - shear load [N]	474.9
MAX COMBINED - CONFIGURATION ID	NOMINAL
MAX COMBINED - ELEMENT ID	SAME AS MAX AXIAL
MAX COMBINED - LOAD CASE ID	
MAX COMBINED - AXIAL LOAD [lb]	
max combined - axial load [N]	
MAX COMBINED - SHEAR LOAD [lb]	
max combined - shear load [N]	

FACTORS OF SAFETY	
ULTIMATE (for nominal configuration)	2.0
ULTIMATE (for fail safe configuration)	1.0
YIELD (only for nominal configuration)	1.25
JOINT SEPARATION (for nominal configuration)	1.2
JOINT SEPARATION (for fail safe configuration)	1.0
FITTING FACTOR	1.15

BOLT & INSERT DATA	
NOMINAL DIAMETER OF BOLT [in]	0.19
NUMBER OF THREADS/INCH [1/in]	32
TOTAL LENGHT OF BOLT [in]	0.5
LENGHT OF INSERT [in]	0.18
THREADED LENGHT [in]	0.5
MIN EXT DIAMETER OF INSERT [in]	0.236
DEPTH OF RECESS FOR INSERT [in]	0.02
HEIGHT OF NUT [in]	NA

WASHER DATA	
THICKNESS OF WASHER [in]	0.063
OUTER DIAMETER OF WASHER [in]	0.354
INNER DIAMETER OF WASHER [in]	0.195
BOLT HEAD DIAMETER [in]	0.3123

FLANGE DATA	
THICK OF FLANGE 1 [in]	0.118
THICK OF FLANGE 2 [in]	0.18
DIAMETER OF HOLE [in]	0.21

BOLT MATERIAL PROPERTY DATA	
TEMP FACTOR FOR ULTIMATE STRENGHT	0.94
TEMP FACTOR FOR YIELD STRENGHT	0.94
ULTIMATE TENSILE ALLOWABLE STRESS [ksi]	160
YIELD TENSILE ALLOWABLE STRESS [ksi]	110
TEMP FACTOR FOR MODULUS	0.94
MODULUS OF ELASTICITY [ksi]	29100
THERMAL COEFF - HOT [1E(-6)/deg]	9.1
THERMAL COEFF - COLD [1E(-6)/deg]	7.8

INSERT MATERIAL PROPERTY DATA	
TEMP FACTOR FOR ULTIMATE STRENGHT	0.94
ULTIMATE TENSILE ALLOWABLE STRESS [ksi]	150

NUT MATERIAL PROPERTY DATA	
TEMP FACTOR FOR ULTIMATE STRENGHT	NA
TENSILE ULTIMATE ALLOWABLE STRESS [psi]	NA
ULTIMATE AXIAL LOAD [lb]	NA

WASHER MATERIAL PROPERTY DATA	
TEMP FACTOR FOR MODULUS	1
MODULUS OF ELASTICITY [ksi]	29100

FLANGE MATERIAL PROPERTY DATA	
TEMP FACTOR FOR MODULUS OF FLANGE 1	0.94
TEMP FACTOR FOR MODULUS OF FLANGE 2	0.94
TEMP FACTOR FOR ULTIMATE STRENGHT OF FLANGE 2	0.94
ULTIMATE SHEAR ALLOWABLE STRESS OF FLANGE 2 [psi]	27000
MODULUS OF ELASTICITY FOR FLANGE 1 [ksi]	10500
MODULUS OF ELASTICITY FOR FLANGE 2 [ksi]	10500
THERMAL COEFF OF FLANGE 1 - HOT [1E(-6)/deg]	12.15
THERMAL COEFF OF FLANGE 1 - COLD [1E(-6)/deg]	11.5
THERMAL COEFF OF FLANGE 2 - HOT [1E(-6)/deg]	12.15
THERMAL COEFF OF FLANGE 2 - COLD [1E(-6)/deg]	11.5
ULTIMATE BEARING ALLOWABLE STRESS FOR FLANGE 1 [psi]	95870
YIELD BEARING ALLOWABLE STRESS FOR FLANGE 1 [psi]	74260
ULTIMATE BEARING ALLOWABLE STRESS FOR FLANGE 2 [psi]	95870
YIELD BEARING ALLOWABLE STRESS FOR FLANGE 2 [psi]	74260

TORQUE AND PRELOAD DATA	
MAX TORQUE [lb in]	32.0
max torque [N m]	3.6
MIN TORQUE [lb in]	30.0
min torque [N m]	3.4
COEFFICIENT OF UTILIZATION [%]	60
LOADING PLANE FACTOR	0.5
PRELOAD UNCETRAINTY	0.35
TORQUE COEFFICIENT	0.2

NOMINAL CONFIGURATION SUMMARY OF MARGINS FOR BOLTS	
MOS CALCULATION - CONFIGURATION ID	NOMINAL
JOINT SEPARATION	4.48 (MAX AXIAL)
DIRECT TENSION ULTIMATE	19.04 (MAX AXIAL)
DIRECT TENSION YIELD	21.05 (MAX AXIAL)
TOTAL TENSION ULTIMATE	1.36 (MAX AXIAL)
TOTAL TENSION YIELD	0.63 (MAX AXIAL)
DIRECT THREAD SHEAR ULTIMATE	10.35 (MAX AXIAL)
TOTAL THREAD SHEAR ULTIMATE	0.33 (MAX AXIAL)
SHEAR ULTIMATE	5.44 (MAX SHEAR)
BENDING ULTIMATE	> 10
COMBINED SHEAR, TENSION AND BENDING ULTIMATE	1.34 (MAX AXIAL)
NOMINAL CONFIGURATION MINIMUM MOS	0.33
NOMINAL CONFIGURATION MINIMUM ULTIMATE MOS	0.33

NOMINAL CONFIGURATION SUMMARY OF MARGINS FOR BEARING FLANGES	
FLANGE 1 - BEARING ULTIMATE	8.67
FLANGE 1 - BEARING YIELD	>10
FLANGE 2 - BEARING ULTIMATE	>10
FLANGE 2 - BEARING YIELD	>10
NOMINAL CONFIGURATION MINIMUM MOS	8.67 (ULT-FL 1)

FAIL SAFE CONFIGURATION IDENTIFICATION	
FAIL SAFE FAILED BOLT CONFIGURATION	FLIGHT FAIL SAFE
FAIL SAFE 1 FAILED BOLT ID	11890

FAIL SAFE CONFIGURATION BOLT LOADS	
MAX AXIAL - ELEMENT ID	11883
MAX AXIAL - LOAD CASE ID	1004
MAX AXIAL - AXIAL LOAD [lb]	47.1
max axial - axial load [N]	209.2
MAX AXIAL - SHEAR LOAD [lb]	51.4
max axial - shear load [N]	228.3
MAX SHEAR - ELEMENT ID	11460
MAX SHEAR - LOAD CASE ID	2032
MAX SHEAR - AXIAL LOAD [lb]	0.9
max shear - axial load [N]	3.9
MAX SHEAR - SHEAR LOAD [lb]	106.5
max shear - shear load [N]	473.5
MAX COMBINED - ELEMENT ID	11883
MAX COMBINED - LOAD CASE ID	1020
MAX COMBINED - AXIAL LOAD [lb]	41.3
max combined - axial load [N]	183.7
MAX COMBINED - SHEAR LOAD [lb]	98.8
max combined - shear load [N]	439.2

FAIL SAFE CONFIGURATION SUMMARY OF MARGINS FOR BOLTS	
MOS CALCULATION - CONFIGURATION ID	FLIGHT FAIL SAFE
JOINT SEPARATION	7.77 (MAX AXIAL)
DIRECT TENSION ULTIMATE	52.45 (MAX AXIAL)
TOTAL TENSION ULTIMATE	1.38 (MAX AXIAL)
DIRECT THREAD SHEAR ULTIMATE	29.27 (MAX AXIAL)
TOTAL THREAD SHEAR ULTIMATE	0.35 (MAX AXIAL)
SHEAR ULTIMATE	11.92 (MAX SHEAR)
BENDING ULTIMATE	> 10
COMBINED SHEAR, TENSION AND BENDING ULTIMATE	1.38 (MAX COMB)
FAIL SAFE CONFIGURATION MINIMUM ULTIMATE MOS	0.35

FAIL SAFE CONFIGURATION SUMMARY OF MARGINS FOR BEARING FLANGES	
FLANGE 1 - BEARING ULTIMATE	>10
FLANGE 2 - BEARING ULTIMATE	>10
FAIL SAFE CONFIGURATION MINIMUM MOS	>10

Table 10-11: Joint 4 nominal and fail safe analyses (flight)

Questo documento contiene informazioni di proprietà di CARLO GAVAZZI SPACE SpA. Tutti i diritti sono riservati.
All information contained in this document are property of CARLO GAVAZZI SPACE SpA. All right reserved.

10.2.3.5 JOINT 5

In the following figures the forces applied to the joint are shown:

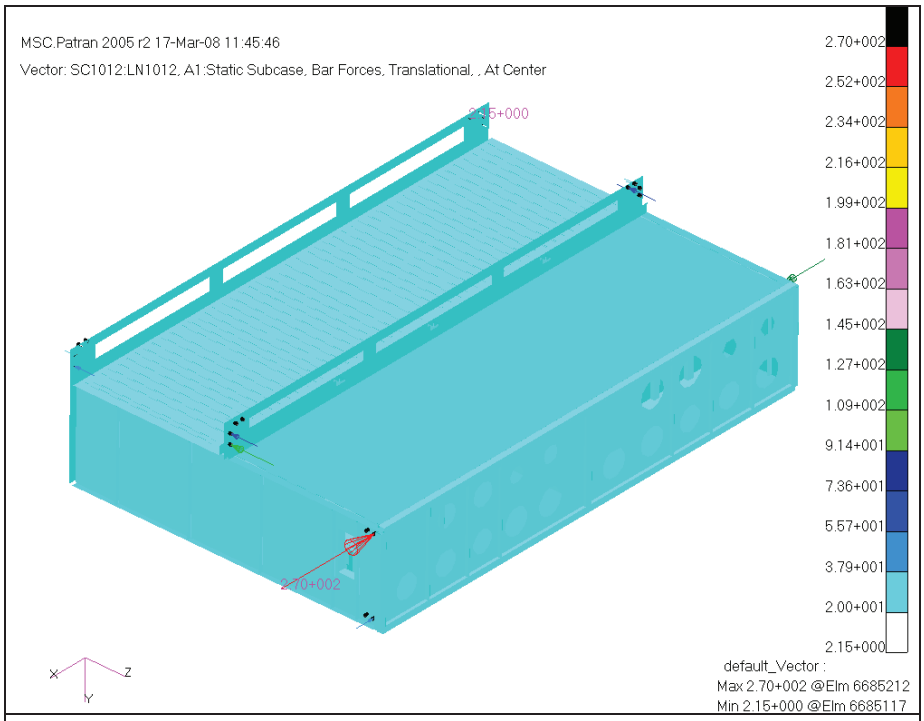

Figure 10-30: Joint 5 critical axial case (flight)

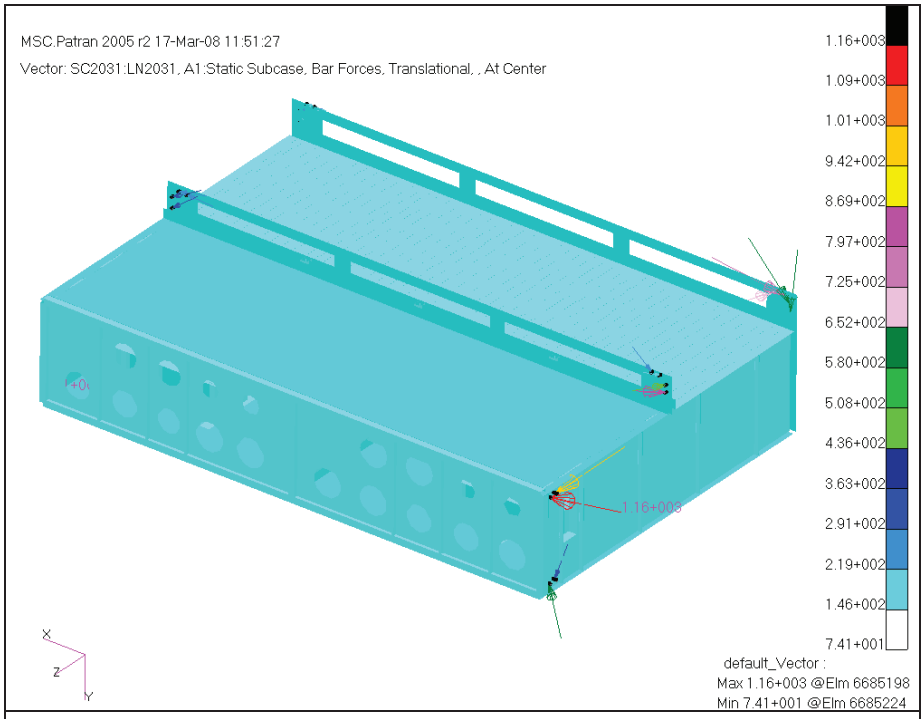

Figure 10-31: Joint 5 critical shear case (flight)

Questo documento contiene informazioni di proprietà di CARLO GAVAZZI SPACE SpA. Tutti i diritti sono riservati.
All information contained in this document are property of CARLO GAVAZZI SPACE SpA. All right reserved.

JUNCTION PROPERTIES	
BOLT	NAS1351N3
WASHER 1	NAS620C10
WASHER 2	NA
NUT	NA
INSERT	MS21209 F1-10
INSERT IN FLANGE	2
NUMBER OF FLANGES	2
LUBRICATED	NO
FLANGE 1 NAME	PDS WALLS
FLANGE 1 MATERIAL	Al7075T7351
FLANGE 1 MATERIAL SPEC	AMS-QQ-A-250/12
FLANGE 1 THICKNESS [in]	0.197
FLANGE 1 HOLE DIAMETER [in]	0.21
FLANGE 2 NAME	PDS WALLS
FLANGE 2 MATERIAL	Al7075T7351
FLANGE 2 MATERIAL SPEC	AMS-QQ-A-250/12
FLANGE 2 THICKNESS [in]	0.18
FLANGE 2 HOLE DIAMETER [in]	0.21

LOADS	
MAX AXIAL - CONFIGURATION ID	NOMINAL
MAX AXIAL - ELEMENT ID	6685212
MAX AXIAL - LOAD CASE ID	1012
MAX AXIAL - AXIAL LOAD [lb]	60.8
max axial - axial load [N]	270.0
MAX AXIAL - SHEAR LOAD [lb]	61.7
max axial - shear load [N]	274.1
MAX SHEAR - CONFIGURATION ID	NOMINAL
MAX SHEAR - ELEMENT ID	6685198
MAX SHEAR - LOAD CASE ID	2031
MAX SHEAR - AXIAL LOAD [lb]	57.4
max shear - axial load [N]	254.9
MAX SHEAR - SHEAR LOAD [lb]	260.5
max shear - shear load [N]	1158.6
MAX COMBINED - CONFIGURATION ID	NOMINAL
MAX COMBINED - ELEMENT ID	SAME AS MAX SHEAR
MAX COMBINED - LOAD CASE ID	
MAX COMBINED - AXIAL LOAD [lb]	
max combined - axial load [N]	
MAX COMBINED - SHEAR LOAD [lb]	
max combined - shear load [N]	

FACTORS OF SAFETY	
ULTIMATE (for nominal configuration)	2.0
ULTIMATE (for fail safe configuration)	1.0
YIELD (only for nominal configuration)	1.25
JOINT SEPARATION (for nominal configuration)	1.2
JOINT SEPARATION (for fail safe configuration)	1.0
FITTING FACTOR	1.15

BOLT & INSERT DATA	
NOMINAL DIAMETER OF BOLT [in]	0.19
NUMBER OF THREADS/INCH [1/in]	32
TOTAL LENGHT OF BOLT [in]	0.5
LENGHT OF INSERT [in]	0.18
THREADED LENGHT [in]	0.5
MIN EXT DIAMETER OF INSERT [in]	0.236
DEPTH OF RECESS FOR INSERT [in]	0.02
HEIGHT OF NUT [in]	NA

WASHER DATA	
THICKNESS OF WASHER [in]	0.063
OUTER DIAMETER OF WASHER [in]	0.35
INNER DIAMETER OF WASHER [in]	0.195
BOLT HEAD DIAMETER [in]	0.312

FLANGE DATA	
THICK OF FLANGE 1 [in]	0.197
THICK OF FLANGE 2 [in]	0.18
DIAMETER OF HOLE [in]	0.21

BOLT MATERIAL PROPERTY DATA	
TEMP FACTOR FOR ULTIMATE STRENGHT	0.94
TEMP FACTOR FOR YIELD STRENGHT	0.94
ULTIMATE TENSILE ALLOWABLE STRESS [ksi]	160
YIELD TENSILE ALLOWABLE STRESS [ksi]	110
TEMP FACTOR FOR MODULUS	0.94
MODULUS OF ELASTICITY [ksi]	29100
THERMAL COEFF - HOT [1E(-6)/deg]	9.1
THERMAL COEFF - COLD [1E(-6)/deg]	7.8

INSERT MATERIAL PROPERTY DATA	
TEMP FACTOR FOR ULTIMATE STRENGHT	0.94
ULTIMATE TENSILE ALLOWABLE STRESS [ksi]	150

NUT MATERIAL PROPERTY DATA	
TEMP FACTOR FOR ULTIMATE STRENGHT	NA
TENSILE ULTIMATE ALLOWABLE STRESS [psi]	NA
ULTIMATE AXIAL LOAD [lb]	NA

WASHER MATERIAL PROPERTY DATA	
TEMP FACTOR FOR MODULUS	1
MODULUS OF ELASTICITY [ksi]	29100

FLANGE MATERIAL PROPERTY DATA	
TEMP FACTOR FOR MODULUS OF FLANGE 1	0.94
TEMP FACTOR FOR MODULUS OF FLANGE 2	0.94
TEMP FACTOR FOR ULTIMATE STRENGHT OF FLANGE 2	0.94
ULTIMATE SHEAR ALLOWABLE STRESS OF FLANGE 2 [psi]	27000
MODULUS OF ELASTICITY FOR FLANGE 1 [ksi]	10500
MODULUS OF ELASTICITY FOR FLANGE 2 [ksi]	10500
THERMAL COEFF OF FLANGE 1 - HOT [1E(-6)/deg]	12.15
THERMAL COEFF OF FLANGE 1 - COLD [1E(-6)/deg]	11.5
THERMAL COEFF OF FLANGE 2 - HOT [1E(-6)/deg]	12.15
THERMAL COEFF OF FLANGE 2 - COLD [1E(-6)/deg]	11.5
ULTIMATE BEARING ALLOWABLE STRESS FOR FLANGE 1 [psi]	95870
YIELD BEARING ALLOWABLE STRESS FOR FLANGE 1 [psi]	74260
ULTIMATE BEARING ALLOWABLE STRESS FOR FLANGE 2 [psi]	95870
YIELD BEARING ALLOWABLE STRESS FOR FLANGE 2 [psi]	74260

TORQUE AND PRELOAD DATA	
MAX TORQUE [lb in]	32.0
max torque [N m]	3.6
MIN TORQUE [lb in]	30.0
min torque [N m]	3.4
COEFFICIENT OF UTILIZATION [%]	61
LOADING PLANE FACTOR	0.5
PRELOAD UNCETRAINTY	0.35
TORQUE COEFFICIENT	0.2

NOMINAL CONFIGURATION SUMMARY OF MARGINS FOR BOLTS	
MOS CALCULATION - CONFIGURATION ID	NOMINAL
JOINT SEPARATION	4.62 (MAX AXIAL)
DIRECT TENSION ULTIMATE	19.7 (MAX AXIAL)
DIRECT TENSION YIELD	21.77 (MAX AXIAL)
TOTAL TENSION ULTIMATE	1.36 (MAX AXIAL)
TOTAL TENSION YIELD	0.633 (MAX AXIAL)
DIRECT THREAD SHEAR ULTIMATE	10.72 (MAX AXIAL)
TOTAL THREAD SHEAR ULTIMATE	0.334 (MAX AXIAL)
SHEAR ULTIMATE	1.64 (MAX SHEAR)
BENDING ULTIMATE	> 10
COMBINED SHEAR, TENSION AND BENDING ULTIMATE	0.885 (MAX SHEAR)
NOMINAL CONFIGURATION MINIMUM MOS	0.33
NOMINAL CONFIGURATION MINIMUM ULTIMATE MOS	0.33

NOMINAL CONFIGURATION SUMMARY OF MARGINS FOR BEARING FLANGES	
FLANGE 1 - BEARING ULTIMATE	5.62
FLANGE 1 - BEARING YIELD	7.20
FLANGE 2 - BEARING ULTIMATE	5.05
FLANGE 2 - BEARING YIELD	6.50
NOMINAL CONFIGURATION MINIMUM MOS	5.05 (ULT-FL 2)

FAIL SAFE CONFIGURATION IDENTIFICATION	
FAIL SAFE FAILED BOLT CONFIGURATION	FLIGHT FAIL SAFE
FAIL SAFE 1 FAILED BOLT ID	6685198

FAIL SAFE CONFIGURATION BOLT LOADS	
MAX AXIAL - ELEMENT ID	6685212
MAX AXIAL - LOAD CASE ID	1012
MAX AXIAL - AXIAL LOAD [lb]	60.6
max axial - axial load [N]	269.2
MAX AXIAL - SHEAR LOAD [lb]	63.0
max axial - shear load [N]	279.9
MAX SHEAR - ELEMENT ID	6685197
MAX SHEAR - LOAD CASE ID	2031
MAX SHEAR - AXIAL LOAD [lb]	-3.7
max shear - axial load [N]	-16.2
MAX SHEAR - SHEAR LOAD [lb]	400.5
max shear - shear load [N]	1781.3
MAX COMBINED - LOAD CASE ID	SAME AS MAX SHEAR
MAX COMBINED - AXIAL LOAD [lb]	
max combined - axial load [N]	
MAX COMBINED - SHEAR LOAD [lb]	
max combined - shear load [N]	

FAIL SAFE CONFIGURATION SUMMARY OF MARGINS FOR BOLTS	
MOS CALCULATION - CONFIGURATION ID	FLIGHT FAIL SAFE
JOINT SEPARATION	5.77 (MAX AXIAL)
DIRECT TENSION ULTIMATE	40.54 (MAX AXIAL)
TOTAL TENSION ULTIMATE	1.38 (MAX AXIAL)
DIRECT THREAD SHEAR ULTIMATE	22.53 (MAX AXIAL)
TOTAL THREAD SHEAR ULTIMATE	0.35 (MAX AXIAL)
SHEAR ULTIMATE	2.43 (MAX SHEAR)
BENDING ULTIMATE	> 10
COMBINED SHEAR, TENSION AND BENDING ULTIMATE	1.11 (MAX SHEAR)
FAIL SAFE CONFIGURATION MINIMUM ULTIMATE MOS	0.35

FAIL SAFE CONFIGURATION SUMMARY OF MARGINS FOR BEARING FLANGES	
FLANGE 1 - BEARING ULTIMATE	7.61
FLANGE 2 - BEARING ULTIMATE	6.87
FAIL SAFE CONFIGURATION MINIMUM MOS	6.87 (ULT-FL 2)

Table 10-12: Joint 5 nominal and fail safe analyses (flight)

Questo documento contiene informazioni di proprietà di CARLO GAVAZZI SPACE SpA. Tutti i diritti sono riservati.
All information contained in this document are property of CARLO GAVAZZI SPACE SpA. All right reserved.

10.3 MARGINS OF SAFETY FOR STRESS ANALYSIS

In the following chapters the summary of the MoS for the strength verification in both test and flight configuration:

10.3.1 MARGINS OF SAFETY IN TEST CONFIGURATION

In the following table MoS of the entire structure are shown:

MARGINS OF SAFETY FOR STRENGHT FAILURE													
ITEM	PART NUMBER	LC	EID	MATERIAL	F_{ty} [MPa]	F_{tu} [MPa]	Limit stress [MPa]	$S.F._y$	$S.F._u$	MoS_y	MoS_u	NOTES	REFERENCE PAGE
STRUCTURE (shell)	10-AMS02PDS-000.04 10-AMS02PDS-200.00 10-AMS02PDS-300.00 11-AMS02PDS-100.05 10-AMS02PDS-000.12 10-AMS02PDS-100.00	9 (At Z2)	24656	AL 7075 T7351	369	440	72.6	1.25	2	**>2**	**>2**	VM	43
STRUCTURE (bars)	10-AMS02PDS-000.07 10-AMS02PDS-000.08 10-AMS02PDS-000.09 10-AMS02PDS-100.10 10-AMS02PDS-100.11 11-AMS02PDS-200.00 10-AMS02PDS-000.14	9	10693	AL 7075 T7351	369	440	52.2	1.25	2	**>2**	**>2**	MC	44
ELECTRONICS	11-AMS02PDS-700.00 11-AMS02PDS-300.00 11-AMS02PDS-400.00 11-AMS02PDS-500.00 11-AMS02PDS-600.00 11-AMS02PDS-200.00 11-AMS02PDS-800.00	11 (At Z1)	24890	Polyimide	-	190	13.4	1.25	2	**-**	**>2**	VM	45

VM = Von Mises
MC = Maximum combined

Table 10-13: MOS summary for test configuration

Questo documento contiene informazioni di proprietà di CARLO GAVAZZI SPACE SpA. Tutti i diritti sono riservati.
All information contained in this document are property of CARLO GAVAZZI SPACE SpA. All right reserved.

10.3.2 MARGINS OF SAFETY IN FLIGHT CONFIGURATION

In the following table MoS of the entire structure are shown:

MARGINS OF SAFETY FOR STRENGHT FAILURE													
ITEM	PART NUMBER	LC	EID	MATERIAL	F_{ty} [MPa]	F_{tu} [MPa]	Limit stress [MPa]	$S.F._y$	$S.F._u$	MoS_y	MoS_u	NOTES	REFERENCE PAGE
STRUCTURE (shell)	10-AMS02PDS-000.04 10-AMS02PDS-200.00 10-AMS02PDS-300.00 11-AMS02PDS-100.05 10-AMS02PDS-000.12 10-AMS02PDS-100.00	2031 (At Z2)	25828	AL 7075 T7351	369	440	66.0	1.25	2	**>2**	**>2**	VM	61
STRUCTURE (bars)	10-AMS02PDS-000.07 10-AMS02PDS-000.08 10-AMS02PDS-000.09 10-AMS02PDS-100.10 10-AMS02PDS-100.11 11-AMS02PDS-200.00 10-AMS02PDS-000.14	2031	12604	AL 7075 T7351	369	440	19.1	1.25	2	**>2**	**>2**	MC	62
ELECTRONICS	11-AMS02PDS-700.00 11-AMS02PDS-300.00 11-AMS02PDS-400.00 11-AMS02PDS-500.00 11-AMS02PDS-600.00 11-AMS02PDS-200.00 11-AMS02PDS-800.00	1016 (At Z2)	31940	Polyimide	-	190	3.9	1.25	2	**-**	**>2**	VM	63
VM = Von Mises MC = Maximum combined													

Table 10-14: MOS summary for flight configuration

Questo documento contiene informazioni di proprietà di CARLO GAVAZZI SPACE SpA. Tutti i diritti sono riservati.
All information contained in this document are property of CARLO GAVAZZI SPACE SpA. All right reserved.

10.4 MOS SUMMARY FOR JOINTS ANALYSIS

In the following chapters the summary of the MoS for the joints verification in both test and flight configuration; in these chapters also the Fail Safe analysis results are presented.

10.4.1 MOS SUMMARY FOR JOINTS IN TEST CONFIGURATION

10.4.1.1 NOMINAL

In the following table the MoS summary for joint analysis in nominal configuration is presented:

MoS type	MoS	Joint
JOINT SEPARATION	0.22	3
DIRECT TENSION ULTIMATE	4.30	3
DIRECT TENSION YIELD	5.35	3
TOTAL TENSION ULTIMATE	0.93	3
TOTAL TENSION YIELD	0.47	3
DIRECT THREAD SHEAR ULTIMATE	7.54	1
TOTAL THREAD SHEAR ULTIMATE	0.34	4
SHEAR ULTIMATE	1.61	3
BENDING ULTIMATE	>10	NA
COMBINED SHEAR, TENSION AND BENDING ULTIMATE	0.68	3
FLANGE BEARING	6.55	2

Table 10-15: MoS joint test nominal configuration

10.4.1.2 FAIL SAFE

In the following table the MoS summary for joint analysis in fail safe configuration is presented:

MoS type	MoS	Joint
JOINT SEPARATION	0.95	3
DIRECT TENSION ULTIMATE	>10	1
TOTAL TENSION ULTIMATE	0.98	3
DIRECT THREAD SHEAR ULTIMATE	>10	1
TOTAL THREAD SHEAR ULTIMATE	0.35	4
SHEAR ULTIMATE	4.34	3
BENDING ULTIMATE	>10	NA
COMBINED SHEAR, TENSION AND BENDING ULTIMATE	0.94	3
FLANGE BEARING	>10	NA

Table 10-16: MoS joint test fail safe configuration

Questo documento contiene informazioni di proprietà di CARLO GAVAZZI SPACE SpA. Tutti i diritti sono riservati.
All information contained in this document are property of CARLO GAVAZZI SPACE SpA. All right reserved.

10.4.2 MOS SUMMARY FOR JOINTS IN FLIGHT CONFIGURATION

10.4.2.1 NOMINAL

In the following table the MoS summary for joint analysis in nominal configuration is presented:

MoS type	MoS	Joint
JOINT SEPARATION	4.48	4
DIRECT TENSION ULTIMATE	>10	4
DIRECT TENSION YIELD	>10	4
TOTAL TENSION ULTIMATE	1.01	3
TOTAL TENSION YIELD	0.51	3
DIRECT THREAD SHEAR ULTIMATE	>10	4
TOTAL THREAD SHEAR ULTIMATE	0.33	4
SHEAR ULTIMATE	1.64	5
BENDING ULTIMATE	>10	NA
COMBINED SHEAR, TENSION AND BENDING ULTIMATE	0.74	3
FLANGE BEARING	5.05	5

Table 10-17: MoS joint flight nominal configuration

10.4.2.2 FAIL SAFE

In the following table the MoS summary for joint analysis in fail safe configuration is presented:

MoS type	MoS	Joint
JOINT SEPARATION	5.77	5
DIRECT TENSION ULTIMATE	>10	5
TOTAL TENSION ULTIMATE	1.01	3
DIRECT THREAD SHEAR ULTIMATE	>10	5
TOTAL THREAD SHEAR ULTIMATE	0.35	4
SHEAR ULTIMATE	2.43	5
BENDING ULTIMATE	>10	NA
COMBINED SHEAR, TENSION AND BENDING ULTIMATE	0.93	3
FLANGE BEARING	6.87	5

Table 10-18: MoS joint flight fail safe configuration

Questo documento contiene informazioni di proprietà di CARLO GAVAZZI SPACE SpA. Tutti i diritti sono riservati.
All information contained in this document are property of CARLO GAVAZZI SPACE SpA. All right reserved.

11.CONCLUSIONS AND COMMENTS

The performed analyses show the following results:

- First frequency in test configuration is 87 Hz (>50Hz)
- All MoS are positive for all applied loads; see chapters 10.3 for the stress analysis and chapters 10.4 for joints analysis.

Questo documento contiene informazioni di proprietà di CARLO GAVAZZI SPACE SpA. Tutti i diritti sono riservati.
All information contained in this document are property of CARLO GAVAZZI SPACE SpA. All right reserved.

ANNEX A. BOLTS VERIFICATION EXAMPLE

Prepared By	C. Bala 10/7/04	LOCKHEED MARTIN Science, Engineering, Analysis, & Test Mechanical Systems Analysis Department	Page No.	Report No. LMSEAT-0005
Checked By			Drawing No.	
Title	**Project Name**	Bolt sample with insert	File name:	bolts_insert_RevC

CHECK BOLTS (NAS1352N08 Material-A-286), Insert MS21209 C08-15, Washer NAS620 C08

Flange 1
Part number:
Material:Al7075T7351

Flange 2
Part number:
Material:Al7075T7351

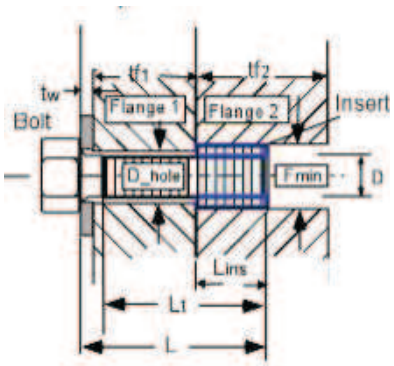

Loads

Applied tensile load $P := 4.2 \cdot lbf$

Applied shear load $V := 137.1 \cdot lbf$

Applied bending moment $M := 0 \cdot in \cdot lbf$

Factors of Safety

Ultimate $SFu := 2.0$

Yield $SFy := 1.25$

Joint Separation $SFsep := 1.2$

Fitting factor $FF := 1.15$

Temperature data

Assembly $Temp_initial := 68 \cdot deg$

Maximum $Temp_max := 122 \cdot deg$

Minimum $Temp_min := 32 \cdot deg$

Bolt and Insert Data

Nominal diameter of bolt $D := 0.164 \cdot in$

Number of threads/inch $Nt := 32 \cdot \frac{1}{in}$

Total length of bolt $L := 0.5 \cdot in$

Length of insert $Lins := 0.246 \cdot in$

Threaded length $Lt := 0.5 \cdot in$

Min. external diameter of insert $Fmin := 0.205 \cdot in$

(If bolt is fully threaded, input Lt = L)

Depth of recess for insert $lr := 0.02 \cdot in$

Reference:E:\PROGETTI\PDS\Bulloni\thread_data.mcd

Washer Data

Thickness of washer $tw := 0.032 \cdot in$

Outer Diameter of washer $Dw := 0.304 \cdot in$

Inner Diameter of washer $Dwi := 0.169 \cdot in$

Bolt head dia. across flats $dw := 0.27 \cdot in$ (used only if there is no washer)

Flange data

Thickness of flange 1 $tf1 := 0.138 \cdot in$

Thickness of flange 2 $tf2 := 0.246 \cdot in$

Diameter of hole $D_hole := 0.18 \cdot in$

Note: If there is no washer, tw, Dw, and Dwi should be zero.

Questo documento contiene informazioni di proprietà di CARLO GAVAZZI SPACE SpA. Tutti i diritti sono riservati.
All information contained in this document are property of CARLO GAVAZZI SPACE SpA. All right reserved.

Prepared By	C. Bala 10/7/04	LOCKHEED MARTIN Science, Engineering, Analysis, & Test Mechanical Systems Analysis Department	Page No.	Report No. LMSEAT-0005
Checked By			Drawing No.	
Title	**Project Name**	Bolt sample with insert	File name:	bolts_insert_RevC

Material Property Data

Bolt

Temperature correction factor for bolt strength ultimate $TSu_bolt := 0.94$ yield $TSy_bolt := 0.94$

Bolt ultimate tensile allowable stress $Ftu_bolt := 160000\,psi$

Bolt ultimate shear allowable stress $Fsu_bolt := 0.6 \cdot Ftu_bolt$

Bolt yield tensile allowable $Fty_bolt := 110000\,psi$

Temperature correction factor for bolt modulus $TE_bolt := 0.94$

Modulus of elasticity of bolt $E_bolt := \left(29.1 \cdot 10^{6} \cdot psi\right)$ Thermal coeffecient for bolt: $\alpha_bolt_hot := 9.1 \cdot 10^{-6} \cdot \frac{\frac{in}{in}}{deg}$

$\alpha_bolt_cold := 7.8 \cdot 10^{-6} \cdot \frac{\frac{in}{in}}{deg}$

Insert

Temperature correction factor for insert strength $TS_ins := 0.94$

Ultimate tensile allowable stress $Ftu_ins := 150000\,psi$

Ultimate shear allowable stress $Fsu_ins := 0.6 \cdot Ftu_ins$

Washer

Temperature correction factor for washer modulus $TE_washer := 1.0$

Modulus of elasticity of washer $E_washer := \left(29.1 \cdot 10^{6} \cdot psi\right)$

Flanges

Stiffness of the joint depends upon number of members in the grip of the fasteners,
Modulus of elasticity of these members, and diameters of the bolt and the washer.

Temperature correction factor for flange 1 $Tf1E := 1.0$ (modulus) $Tf2s := 0.91$ (strength)

Temperature correction factor for flange 2 $Tf2E := 1.0$ (modulus) $Fsu_f2 := 27000\,psi$

Modulus of elasticity for the parts in the joint $E_flange1 := \left(10.5 \cdot 10^{6} \cdot psi\right)$ $E_flange2 := \left(10.5 \cdot 10^{6} \cdot psi\right)$

Coefficient of thermal expansion for flanges $\alpha_flange1_hot := 12.15 \cdot 10^{-6} \cdot \frac{\frac{in}{in}}{deg}$ $\alpha_flange2_hot := 12.15 \cdot 10^{-6} \cdot \frac{\frac{in}{in}}{deg}$

$\alpha_flange1_cold := 11.5 \cdot 10^{-6} \cdot \frac{\frac{in}{in}}{deg}$ $\alpha_flange2_cold := 11.5 \cdot 10^{-6} \cdot \frac{\frac{in}{in}}{deg}$

Torque/Preload data

Maximum torque $Tmax := 20 \cdot in \cdot lbf$ Loading plane factor: $n := 0.5$

Minimum torque $Tmin := 18 \cdot in \cdot lbf$ Preload Uncertainty: $\Gamma := 0.35$

Torque coefficient: $k := 0.20$

Questo documento contiene informazioni di proprietà di CARLO GAVAZZI SPACE SpA. Tutti i diritti sono riservati.
All information contained in this document are property of CARLO GAVAZZI SPACE SpA. All right reserved.

Prepared By	C. Bala 10/7/04	LOCKHEED MARTIN Science, Engineering, Analysis, & Test Mechanical Systems Analysis Department	Page No.	Report No. LMSEAT-0005
Checked By			Drawing No.	
Title	**Project Name**	Bolt sample with insert	File name:	bolts_insert_RevC

Reference:E:\PROGETTI\PDS\Bulloni\bolt_ stiffness_insert_RevC.mcd

Bolt Load data

Bolt/joint stiffness factor	$\phi = 0.285$	Preload due to temperature	$Pthr_pos = 55.6lbf$
Max. preload	$PLDmax = 878.8lbf$		$Pthr_neg = -45lbf$
Min. preload	$PLDmin = 270.6lbf$	Uncertainty factor	$\Gamma = 0.35$
Joint separation load	$Psep = 5.04lbf$	Torque coefficient	$k = 0.2$
Max. load on the bolt(ultimate)	$Pb = 880.2lbf$	Loading plane factor	$n = 0.5$
Max. load on the bolt(yield)	$Pby = 879.7lbf$	Thread shear pullout load of bolt or insert	$Pths = 5919.8lbf$
Bolt ultimate tensile strength	$PAt = 2013.3lbf$	Thread shear pullout load in parent metal	$Ppths = 1946.3lbf$

$$Util_coeff := \frac{PLDmax \cdot 100}{PAy}$$

$Length_check$ = "Bolt length is sufficient"

$Util_coeff = 63.492$

Summary of Margins for bolt:

Joint separation	$MS_1 = 53.45$	Direct Thread shear Ultimate	$MS_6 = 200.48$
Direct Tension Ultimate	$MS_2 = 207.41$	Total Thread shear Ultimate	$MS_7 = 1.21$
Direct Tension Yield	$MS_3 = 228.25$	Shear Ultimate	$MS_8 = 2.42$
Total Tension Ultimate	$MS_4 = 1.29$	Bending Ultimate	$MS_9 = 10$
Total Tension Yield	$MS_5 = 0.573$	Combined shear, tension and bending ultimate	$MS_{10} = 1.033$

Determination of the smallest margin of safety for the bolt, and the failure mode:

$$MSbolt := \min(MS)$$

$MSbolt = 0.573$ $\quad$ $Failure_Mode$ = "Total Tension Yield"

Questo documento contiene informazioni di proprietà di CARLO GAVAZZI SPACE SpA. Tutti i diritti sono riservati.
All information contained in this document are property of CARLO GAVAZZI SPACE SpA. All right reserved.

ANNEX B. PSD TABLE FOR SAFETY REVIEW

Margin of Safety									
Item	**Drawing Numbers**	**Material and Temper**	**Material Allowable Stress [ksi]**	**Max Tensile Stress [Ksi]**	**Ratio of applied limit stress to allowable stress**	**Margin of Safety (ult) SF = 2**	**Fracture classification**	**Rationale**	**Comments**
BASEPLATE	10-AMS02PDS-000.04	AL 7075 T7351	63.8	9.6	0.15	>2			
RIGHT PANEL	10-AMS02PDS-200.00								
LEFT PANEL	10-AMS02PDS-300.00								
BACKPANEL FRAME	11-AMS02PDS-100.05								
FRONT PANEL	10-AMS02PDS-000.12								
REAR PANEL	10-AMS02PDS-100.00								
MIDDLE WALL	10-AMS02PDS-000.07								
STIFFENERS_REAR	10-AMS02PDS-000.08 10-AMS02PDS-000.09								
TOP COVER FRONT	10-AMS02PDS-100.10								
TOP COVER REAR	10-AMS02PDS-100.11								
DB SUPPORT	10-AMS02PDS-000.14								
INPUT STAGE	11-AMS02PDS-200.00								
ELECTRONICS	11-AMS02PDS-700.00 11-AMS02PDS-300.00 11-AMS02PDS-400.00 11-AMS02PDS-500.00 11-AMS02PDS-600.00 11-AMS02PDS-200.00 11-AMS02PDS-800.00 11-AMS02PDS-200.00	Polyimide	27.6	0.6	0.02	>2			
* FLIGHT LOADS									

Table B-1 PSD table for safety review

Questo documento contiene informazioni di proprietà di CARLO GAVAZZI SPACE SpA. Tutti i diritti sono riservati.
All information contained in this document are property of CARLO GAVAZZI SPACE SpA. All right reserved.

Margin of Safety of Fasteners for nominal configuration									
Fasteners	**Material**	**Type**	**Material Allowable Stress [ksi]**	**Applied Load [lbf]**	**Utilization coefficient**	**Margin of Safety (ult) SF = 2**	**Fracture classification**	**Rationale**	**Comments**
Joint 1	A-286	NAS 1351N3-8	160	Axial : 4.5 Shear : 128.9	64	1.19	Fail Safe		Combined axial and shear
Joint 2	A-286	NAS 1352N08	160	Axial : 5.1 Shear : 159	63	0.94	Fail Safe		Combined axial and shear
Joint 3	AISI 304	MS24671-14	80	Axial : 6.1 Shear : 85.7	66	0.74	Fail Safe		Combined axial and shear
Joint 4	A-286	NAS 1351N3	160	Axial : 62.8 Shear : 68.3	60	0.33	Fail Safe		Total thread shear ultimate
Joint 5	A-286	NAS 1351N3-8	160	Axial : 60.8 Shear : 61.7	61	0.33	Fail Safe		Total thread shear ultimate
* FLIGHT LOADS									

Table B-2 Joint table for safety review, nominal configuration

Questo documento contiene informazioni di proprietà di CARLO GAVAZZI SPACE SpA. Tutti i diritti sono riservati.
All information contained in this document are property of CARLO GAVAZZI SPACE SpA. All right reserved.

Margin of Safety of Fasteners for fail safe configuration									
Fasteners	**Material**	**Type**	**Material Allowable Stress [ksi]**	**Applied Load [lbf]**	**Utilization coefficient**	**Margin of Safety (ult) SF = 1**	**Fracture classification**	**Rationale**	**Comments**
Joint 1	A-286	NAS 1351N3-8	160	Axial : 16.4 Shear : 128.9	64	1.25	Fail Safe		Combined axial and shear
Joint 2	A-286	NAS 1352N08	160	Axial : 13.7 Shear : 64.5	63	1.21	Fail Safe		Total thread shear ultimate
Joint 3	AISI 304	MS24671-14	80	Axial : 3.1 Shear : 104.1	66	0.93	Fail Safe		Combined axial and shear
Joint 4	A-286	NAS 1351N3	160	Axial : 47.1 Shear : 51.4	60	0.35	Fail Safe		Total thread shear ultimate
Joint 5	A-286	NAS 1351N3-8	160	Axial : 60.6 Shear : 63	61	0.35	Fail Safe		Total thread shear ultimate
* FLIGHT LOADS									

Table B-3 Joint table for safety review, fail safe configuration

Questo documento contiene informazioni di proprietà di CARLO GAVAZZI SPACE SpA. Tutti i diritti sono riservati.
All information contained in this document are property of CARLO GAVAZZI SPACE SpA. All right reserved.