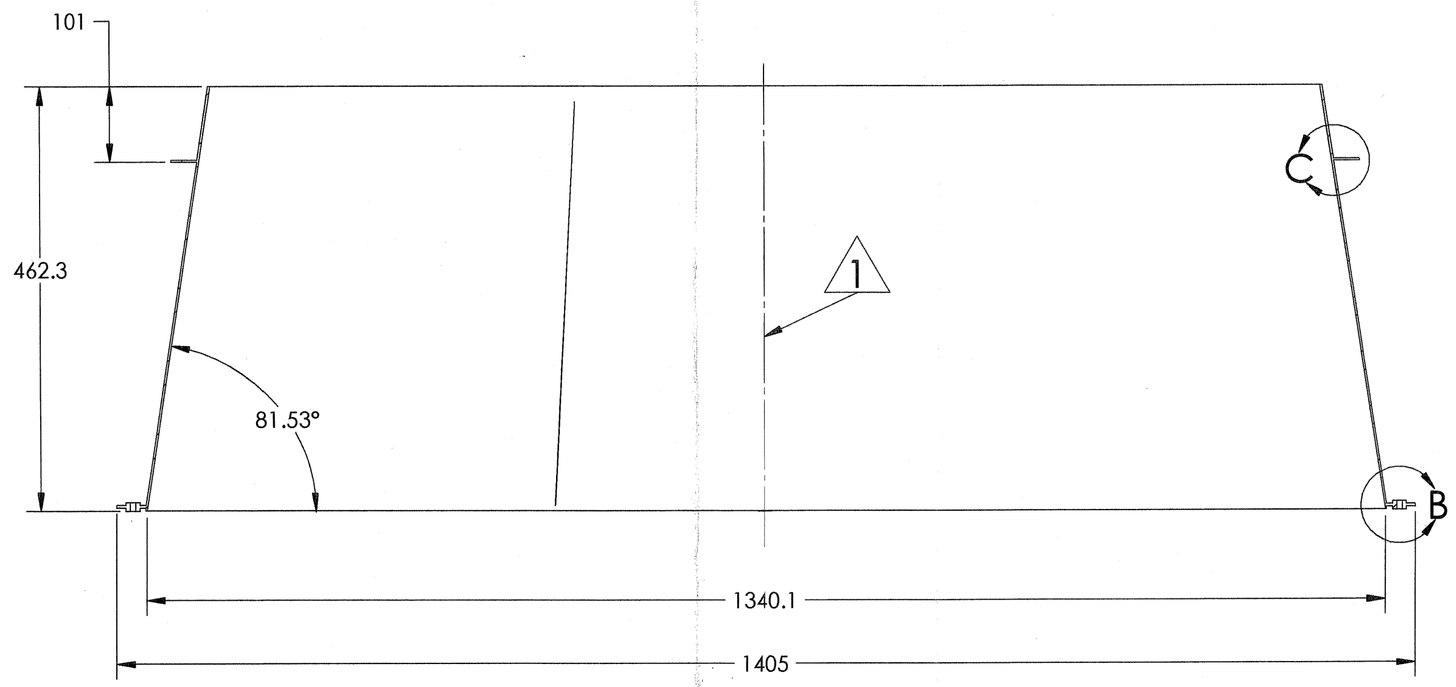

SECTION A-A
SCALE 1 : 5

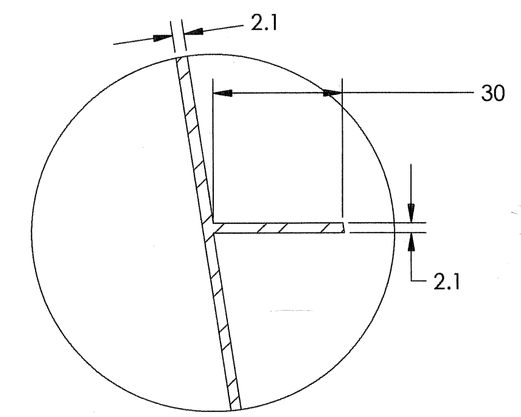

DETAIL C

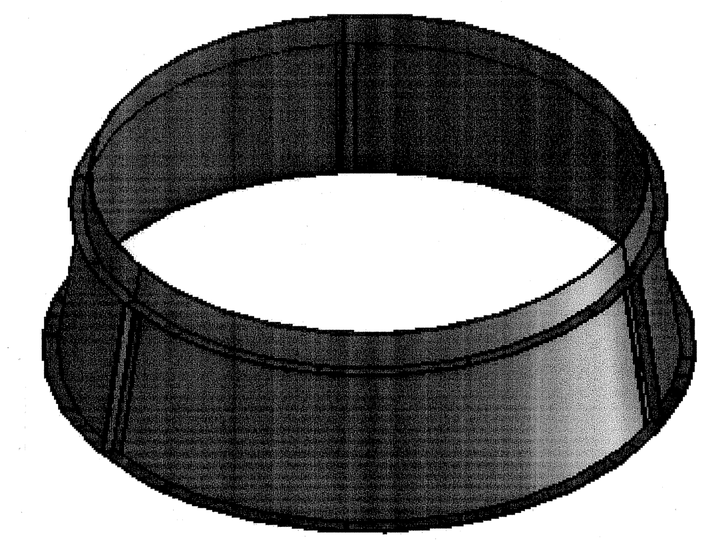

3D Rendering

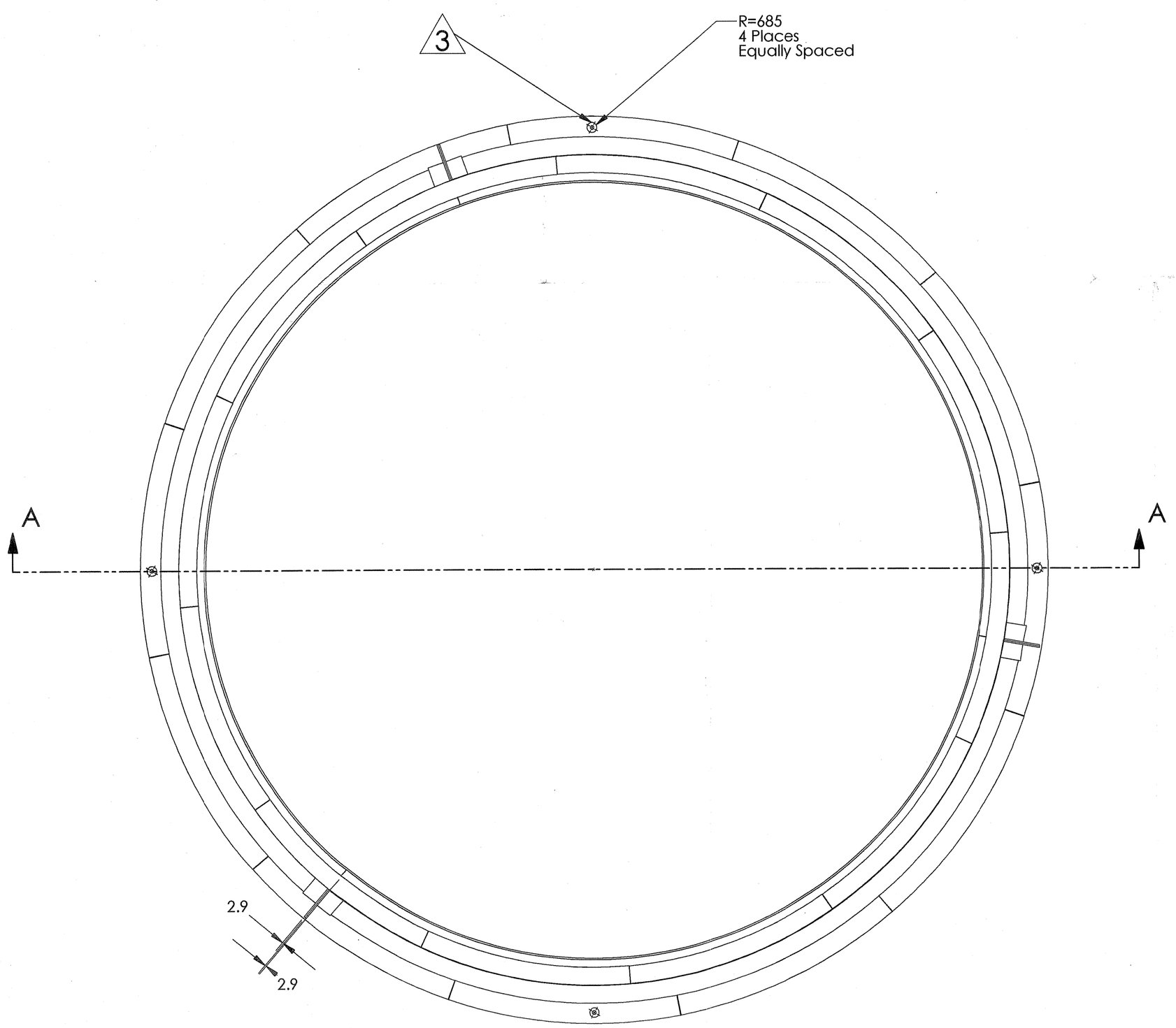

Top View

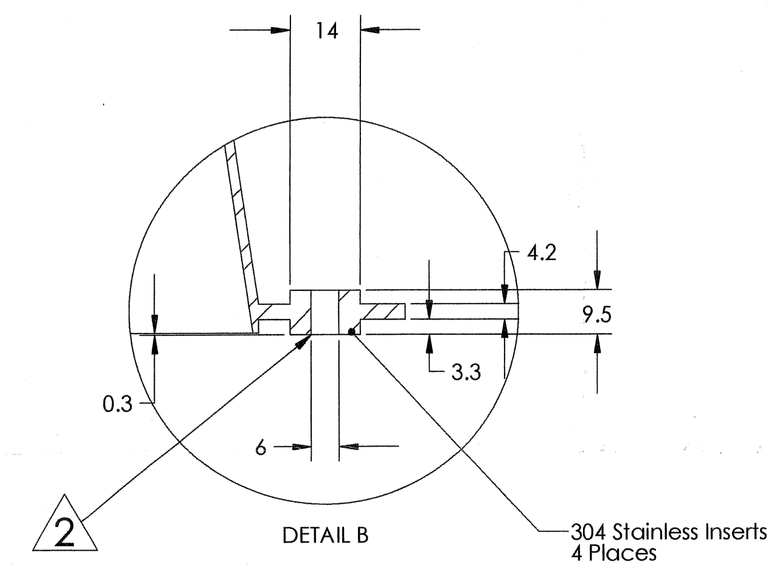

DETAIL B

NOTES:

1: Cone axis perpendicular to mounting plane to within 0.04 deg.

2: Mounting plane defined by 4 stainless bushes. Deviation of any insert from plane is <0.3 mm.

3: Mounting hole pattern forms perpendicular cross to within 0.08 deg.

4. Vertical ribs 2.9 thick. Constructed from L bracket and bonded to outside of mirror panel (6 places) at seams.

5. Upeer ring rib made up of 12 sections. Overlap bonding pads under seams.

6. Lower ring rib made up of 2 rings of 12 sections each, completely overlapped and bonded.

PROPRIETARY AND CONFIDENTIAL
THE INFORMATION CONTAINED IN THIS DRAWING IS THE SOLE PROPERTY OF COMPOSITE MIRROR APPLICATIONS. ANY REPRODUCTION IN PART OR AS A WHOLE WITHOUT THE WRITTEN PERMISSION OF COMPOSITE MIRROR APPLICATIONS, IS PROHIBITED.

NEXT ASSY	USED ON	UNLESS OTHERWISE SPECIFIED: DIMENSIONS ARE IN MILLIMETERS TOLERANCES: FRACTIONAL ± ANGULAR: MACH ± BEND ± TWO PLACE DECIMAL ± THREE PLACE DECIMAL ±		NAME	DATE
			DRAWN	R. Martin	8/3/2005
			CHECKED		
			ENG APPR.		
			MFG APPR.		
		INTERPRET GEOMETRIC TOLERANCING PER:	Q.A.		
		MATERIAL CFRP M46J	COMMENTS:		
		FINISH			
APPLICATION					

Composite Mirror Applications

TITLE: AMS-02 RICH FM

SIZE	DWG. NO.	REV
D	CGS Final 7-20-05	2

SCALE: 1:5 | WEIGHT: 8.2 Kg | SHEET 1 OF 1

D CGS Final 7-20-05 REV