CARLO GAVAZZI SPACE SpA

RICH SYSTEM

Tipo Doc.: *Doc.Type:*	REPORT			N°DRD: *DRD N°:*	DEL 01
N°Doc.: *Doc. N°:*	**RICSYS-RP-CGS-023**	Ediz.: *Issue:* **1**	Data: *Date:* **20/06/08**	Pagina *Page* **1**	Di *Of* **91**
Titolo : *Title :*	RICH INCREMENTAL DESIGN AND ANALYSIS REPORT				

	Nome & Funzione *Name & Function*	Firma *Signature*	Data *Date*
Preparato da: *Prepared by:*	Bursi A. (DT/MT)		
Approvato da: *Approved by:*	Olivier M. (PM) Molina M. (DT/MT) Cremonesi L. (PA/SF) Cinquepalmi C. (PC/CC)		
Applicazione autorizzata da: *Application authorized by:*	Olivier M. (PM)		
Customer / Higher Level Contractor			
Accettato da: *Accepted by:*			
Approvato da: *Approved by:*			

LISTA DI DISTRIBUZIONE *DISTRIBUTION LIST*	N	A	I
Interna / *Internal*			
Esterna / *External*			
ASI	1	x	
INFN BO	1		x

N=Numero di copie A=Applicazione I=Informazione
N=Number of copy A=Application I=Information

Gestione documenti:
Data Management: ----------
Firma / *Signature* Data / *Date*

File: RICSYS-RP-CGS-023_iss1.doc

Questo documento contiene informazioni di proprietà di CARLO GAVAZZI SPACE SpA: Tutti i diritti sono riservati
All information contained in this document are property of CARLO GAVAZZI SPACE SpA. All right reserved.

REGISTRAZIONE DELLE MODIFICHE / *CHANGE RECORD*

EDIZIONE *ISSUE*	DATA *DATE*	AUTORIZZAZIONE *CHANGE AUTHORITY*	OGGETTO DELLA MODIFICA E SEZIONI AFFETTE *REASON FOR CHANGE AND AFFECTED SECTIONS*
1	20/06/2008		First Issue

Questo documento contiene informazioni di proprietà di CARLO GAVAZZI SPACE SpA. Tutti i diritti sono riservati.
All information contained in this document are property of CARLO GAVAZZI SPACE SpA. All right reserved.

LISTA DELLE PAGINE VALIDE / *LIST OF VALID PAGES*

PAGINA *PAGE*	EDIZIONE *ISSUE*	PAGINA *PAGE*	EDIZIONE *ISSUE*	PAGINA *PAGE*	EDIZIONE *ISSUE*	PAGINA *PAGE*	EDIZIONE *ISSUE*	PAGINA *PAGE*	EDIZIONE *ISSUE*
1 - 91	1								

Questo documento contiene informazioni di proprietà di CARLO GAVAZZI SPACE SpA. Tutti i diritti sono riservati.
All information contained in this document are property of CARLO GAVAZZI SPACE SpA. All right reserved.

TABLE OF CONTENT

1. SCOPE 6

2. ACRONYMS 6

3. APPLICABLE DOCUMENTS 7

3.1 REFERENCE DOCUMENTS 7

4. INCREMENTAL DESIGN DESCRIPTION 8

4.1 DEBRIS SHIELDS 8
4.2 DEBRIS SHIELD BOUNDARY ELEMENTS 14
4.3 RICH SYSTEM INTERNAL HARNESS SUPPORTS 16
4.4 RICH SYSTEM EXTERNAL HARNESS SUPPORTS 18
4.5 AEROGEL CONTAINER NAF TILES 20
4.6 AEROGEL CONTAINER PURGING SYSTEM 24
4.7 RICH SYSTEM OPTICAL SEALING 29

5. INCREMENTAL DESIGN STRUCTURAL ANALYSIS 32

5.1 VERIFIED ITEMS OF RICH 33
5.2 USED SOFTWARE 33
5.3 MODEL UNITS 34
5.4 MODEL COORDINATE SYSTEM 34
5.5 MODEL MATERIALS 36
5.5.1 AL 7075 T7351 36
5.5.2 AL 5083 H111 37
5.5.3 CFRP / DEBRIS SHIELDS 38
5.5.4 HONEYCOMB 39
5.5.5 PEEK 1000 40
5.6 RICH FE MODEL IMPROVEMENT DESCRIPTION 41
5.6.1 GRID CLOSURE PANEL 42
5.6.2 DEBRIS SHIELD 43
5.6.3 CABLE MASS 44
5.6.4 DEBRIS BRACKETS 45
5.6.5 DEBRIS UPPER CONNECTION 46
5.6.6 INTERNAL CABLE SUPPORT 47
5.6.7 EXTERNAL CABLE SUPPORTS 48
5.7 MODEL BOUNDARY CONDITIONS 49
5.8 MODEL MASS BUDGET 51
5.9 DIMENSIONING LOADS 52
5.10 DIMENSIONING RULES 55
5.10.1 SAFETY FACTORS 55
5.10.2 TEMPERATURE DERATING FACTOR 55
5.10.3 MARGINS OF SAFETY FOR STRUCTURE 55
5.11 MARGINS OF SAFETY FOR COMPOSITE (CFRP) 56
5.12 FAILURE INDEX CALCULATION FOR COMPOSITE (CFRP) 56
5.13 HONEYCOMB VERIFICATION 56
5.14 DYNAMIC ANALYSIS 57
5.14.1 EIGENFREQUENCIES AND MODE SHAPES 57
5.14.2 EFFECTIVE MASS 60
5.15 STATIC ANALYSIS 61
5.15.1 STRESS ANALYSIS 61
5.15.1.1 EXTERNAL STRUCTURE 62
5.15.1.2 DEBRIS SHIELD 63
5.15.1.2.1 CFRP 63
5.15.1.2.2 HONEYCOMB 63

Questo documento contiene informazioni di proprietà di CARLO GAVAZZI SPACE SpA. Tutti i diritti sono riservati.
All information contained in this document are property of CARLO GAVAZZI SPACE SpA. All right reserved.

5.15.1.3 DEBRIS BRACKETS 64
5.15.1.4 DEBRIS UPPER CONNECTION 64
5.15.1.5 INTERNAL CABLE SUPPORT 65
5.15.1.6 EXTERNAL CABLE SUPPORTS 66
5.15.2 MARGINS OF SAFETY SUMMARY 68
5.16 JOINT ANALYSIS 70
5.16.1 JOINT GEOMETRY INPUT 72
5.16.1.1 JOINT 7: EXTERNAL STRUCTURE- DEBRIS SHIELD BKT 73
5.16.1.2 JOINT 8: DEBRIS SHIELD BKT- DEBRIS SHIELD 74
5.16.1.3 JOINT 9: DEBRIS SHIELD UPPER CORNER - DEBRIS SHIELD UPPER CORNER 75
5.16.2 MOS SUMMARY FOR JOINT ANALYSIS 76
5.17 VENTING ANALYSIS 77
5.17.1 INTRODUCTION 77
5.17.2 GRID LINEAR TRUSSES 78
5.17.3 GRID TRIANGULAR TRUSSES 81
5.17.4 OVERALL RICH INTERNAL VOLUME 83
5.17.5 AEROGEL VOLUME 88
5.17.6 PRESSURE DIFFERENCE RICH VS. AEROGEL 89
5.18 INCREMENTAL DESIGN VERIFICATION CONCLUSIONS AND COMMENTS 91

Questo documento contiene informazioni di proprietà di CARLO GAVAZZI SPACE SpA. Tutti i diritti sono riservati.
All information contained in this document are property of CARLO GAVAZZI SPACE SpA. All right reserved.

1. SCOPE

This document corresponds to contract deliverable DEL 01 of AD2.
The aim of this document is to summarize the RICH and AEROGEL container design and structural verification modification/improvement from the version described in the RD1 and RD2.
The RICH and Aerogel container design addition, modification and improvements are shown (see chapter 4).

The RICH system dynamic analysis (chapter 5.14), static analysis (chapter 5.15), joint verification (chapter 5.16) and venting analysis (chapter 5.17) are shown and the result of these analyses has demonstrated that the RICH assembly added parts are compliant with all structural requirements:

- All the MoS of the structure are positive, under applicable design loads (see Chp 5.15.2 , 5.16.2)
- No stress due to the depressurisation of the Cargo Bay (see Chp 5.17)

2. ACRONYMS

AD: Applicable Documents

AMS: Alpha Magnetic Spectrometer

CFRP: Carbon Fiber Reinforced Plastic

DOF: Degrees Of Freedom

DS: Debris Shield

FEA: Finite Element Analysis

FEM: Finite Element Model

FM: Flight Model

I/F: Interface

ISS : International Space Station

LTOF: Lower Time Of Flight

LUSS: Lower USS

MOD: Meteoroids and Orbital Debris

NaF: Sodium Fluoride

PI : Principal Investigator

PMMA: Polymethyl Methacrylate

PNP: Probability of No Penetration

PMT: Photo Multiplier Tube

RD: Reference Document

RICH : Ring Imaging Cherenkov Counter

USS: Unique Support Structure

WRT: With Respect To

Questo documento contiene informazioni di proprietà di CARLO GAVAZZI SPACE SpA. Tutti i diritti sono riservati.
All information contained in this document are property of CARLO GAVAZZI SPACE SpA. All right reserved.

3. APPLICABLE DOCUMENTS

The following documents form a part of this specification to the extent specified herein. Documents referenced in the following specifications, standards, publications and procedures are also a part of this specification and are applicable to the extent specified in the text to meet the requirements of this document.

AD #	Doc Number	Issue	Date	Rev	Title
1.	JSC-28792		August, 2003	C	Alpha Magnetic Spectrometer - 02 Structural Verification Plan for the Space Transportation System and the International Space Station
2.	I/020/03/1	NA	30/01/2008		Atto aggiuntivo a contratto " programma AMS 02 per la realizzazione della struttura meccanica del sottosistema RICH e progetto del controllo termico di RICH e dei sottosistemi TOF ed ECAL"

3.1 REFERENCE DOCUMENTS

RD #	Doc Number	Issue	Date	Rev	Title
1.	RICSYS-RP-CGS-007	1	06-07-2004		RICH AND AEROGEL PANEL MECHANICAL DESIGN REPORT
2.	RICSYS-RP-CGS-009	2	09-11-05		RICH STRUCTURAL ANALYSIS REPORT
3.	RICSYS-RP-CGS-010	2	08-07-05		RICH thermal control system design report Thermal Analysis report
4.	NSTS-21000-IDD-ISS		18-02-1998	A	International Space Station Interface Definition Document
5.			June 2004		From ESA SP-558 Review of Ballistic Limit Equations for CFRP Structure Walls of Satellites
6.	ESABASE –GD-01/1	1	1992		ESABASE/DEBRIS: Meteoroid/Debris Impact Analysis. Version 90.1
7.			June, 1973		E. F. BRUHN – Analysis Design of Flight Vehicle Structures
8.	MIL-HDBK-5	H	Dec, 1998		Metallic Materials and Elements for Aerospace Vehicle Structures

Questo documento contiene informazioni di proprietà di CARLO GAVAZZI SPACE SpA. Tutti i diritti sono riservati.
All information contained in this document are property of CARLO GAVAZZI SPACE SpA. All right reserved.

4. INCREMENTAL DESIGN DESCRIPTION

In this charter the engineering of the following items is presented:

- Debris Shields (chp. 4.1);
- Debris Shield boundary elements (chp. 4.2) ;
- RICH system harness (chp. 4.3);
- Aerogel container additional NaF tiles engineering (chp. 4.5) ;
- Aerogel container purging system (chp. 4.6) ;
- RICH system optical sealing (chp. 4.7).

4.1 DEBRIS SHIELDS

The ISS low orbit is affected from the meteoroids and orbital debris (MOD); the following figure shows which areas of the ISS are most vulnerable to impacts from orbital debris.

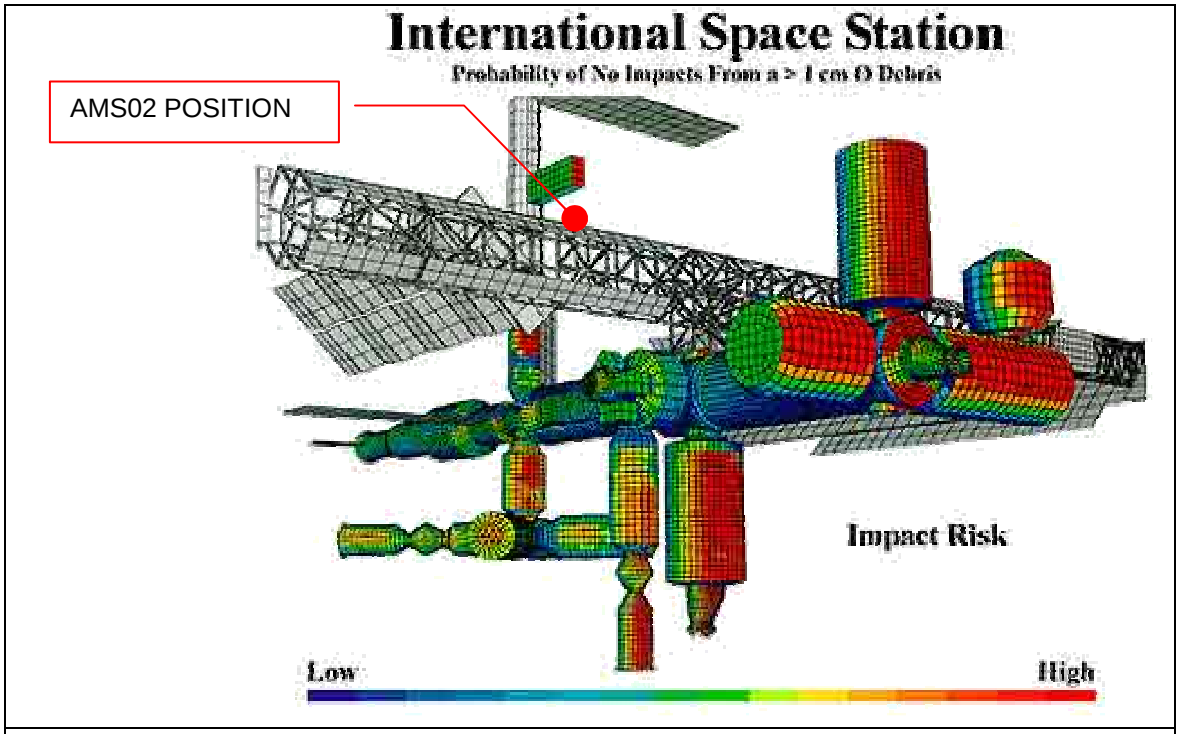

Figure 4-1 ISS orbital debris impact risk map

In order to protect the RICH functionality from possible impacts debris shields have been considered around the detector carbon mirror, since at least one detector side (AMS02 RAM) will be subjected to an high impact risk probability.
CFRP sandwich panels with honeycomb core debris shields have been considered with the following assumption:

1. The so-called “ESA Triple Wall Formula” has been applied elaborating the necessary parameters from RD5;
2. The tool applied for corresponding analysis is ESABASE version 5.1;

Questo documento contiene informazioni di proprietà di CARLO GAVAZZI SPACE SpA. Tutti i diritti sono riservati.
All information contained in this document are property of CARLO GAVAZZI SPACE SpA. All right reserved.

3. Shielding or shadowing effects of parts of the ISS or other parts of the AMS are conservatively not taken into account, therefore only the RICH detector shield is modelled geometrically with the attitude given in Table 4-1;
4. The MOD environment is modelled according to “NASA 90” resp. “NASA 89”, see RD6 for details, whereas the debris mass growth rate is assumed to 5%, the fragment growth rate to 4%. The solar flux of 75 Jansky has been considered;
5. As failure criterion a particle penetration through the back-up wall (inner layer of Debris Shield panel) is assumed;
6. The required Probability of No Penetration (PNP) is 99%. The overall mass for all panels should be not higher than 6.4 kg. For maximum shield thickness holds: t = 25mm.

The following table shows the RICH system orbital parameters:

Parameter	Unit	Value	Remarks
Attitude of apogee	Km	380	mean value
Attitude of perigee	Km	380	mean value
Inclination	°	51.6	
Right ascension	°	308.0	Right ascension of ascending node
Argument of perigee	°	2.72	
True anomaly	°	0	
Mission duration	years	5	

Table 4-1 Orbital parameters used to size the RICH debris shield

The MOD analysis performed with ESABASE is based on the ESA-Triple-Wall Formula, where the threshold diameter d is calculated as follows:

$$d(v \le 3Km/s) = \left(\frac{\frac{t_W}{K3S} \cdot \left(\frac{\tau}{40000} \right)^{0.5} + t_S}{0.6 \cdot \cos\Theta \cdot v^{0.667} \cdot \rho_p^{\,0.5}} \right)^{0.947}$$

$$d(3Km/s < v < 7Km/s) = d(v = 3Km/s) \cdot \left(1.75 - \frac{v}{4} \right) + d(v = 7Km/s) \cdot \left(\frac{v}{4} - 0.75 \right)$$

$$d(v \ge 7Km/s) = 1.155 \cdot K3D^{-0.657} \cdot t_W^{\,0.667} \cdot \rho_p^{\,-0.333} \cdot \rho_b^{\,-0.111} \cdot v^{-0.667} \cdot \left(\frac{\tau S}{70000} \right)^{0.333}$$

The following table shows the used parameters:

Questo documento contiene informazioni di proprietà di CARLO GAVAZZI SPACE SpA. Tutti i diritti sono riservati.
All information contained in this document are property of CARLO GAVAZZI SPACE SpA. All right reserved.

Parameter	Unit	Value	Remarks
d: threshold diameter	cm	Calculated	
v: normal particle velocity	Km/s	Variable	
Θ : impact angle	°	Variable	
t_s: Bumper thickness	cm	$0.04 < t_s < 0.1$	Outer DS layer
t_W: back-up wall thickness	cm	$0.04 < t_W < 0.1$	Inner DS layer
ρ_p : particle density	g/cm^3	ESABASE default	
ρ_b : bumper density	g/cm^3	1.4	Outer DS layer
ρ_W : back-up wall density	g/cm^3	1.4	Inner DS layer
τ : back-up yield stress	lb/inc^2	100000	max possible value in ESABASE
S: accumulated spacing	cm	$1 < S < 2$	DS core size
K3S: plate parameter		0.7	see RD5
K3D: plate parameter		0.169	see RD5
MLI			Present

Table 4-2 Used parameters in ESABASE

The following figure shows the geometrical model of the RICH detector protected by shielding. Here, only impacts on the given eight lateral DS panels are considered. Since shadowing of other AMS components are neglected, too, the applied model is nevertheless conservative. The –Y direction is the RAM direction, whereas Z is pointing to ZENIT.

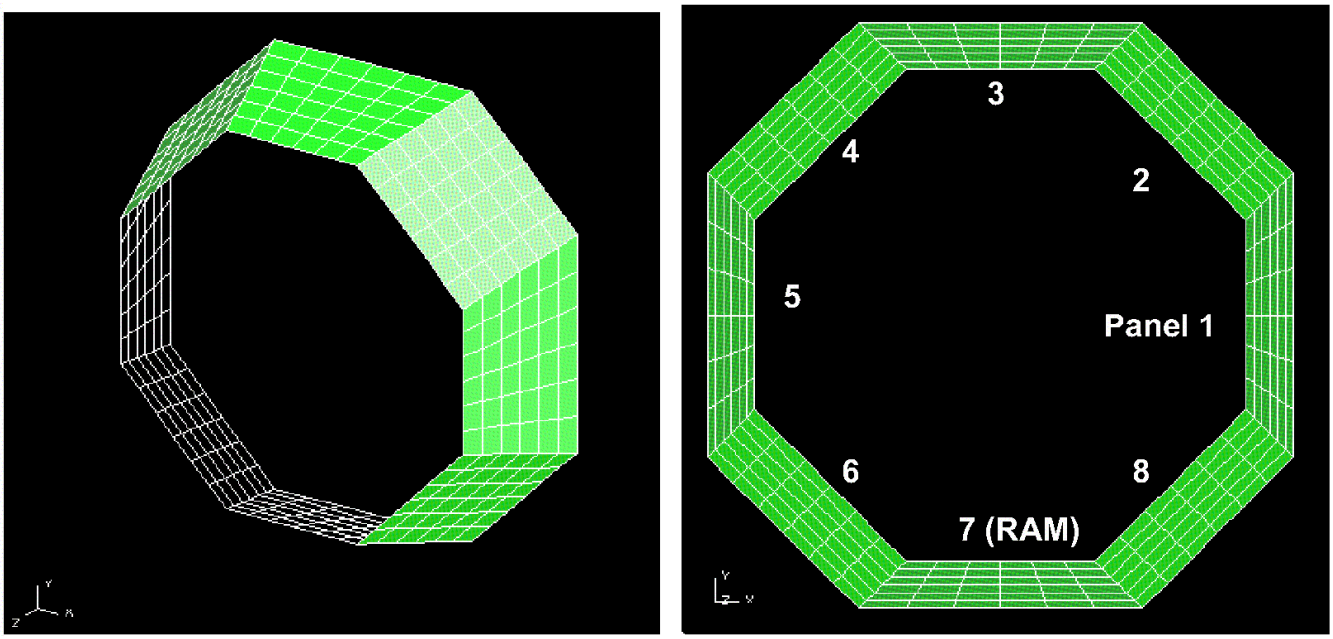

Figure 4-2 RICH detector DS geometrical model

In order to perform a first evaluation DS with constant thickness has been considered. In particular the considered skins (both inner and outer) thickness is 1 mm and the considered core is 20 mm. The following figures show the failure distribution (failure fluence/m^2) both for meteoroids and debris.

Questo documento contiene informazioni di proprietà di CARLO GAVAZZI SPACE SpA. Tutti i diritti sono riservati.
All information contained in this document are property of CARLO GAVAZZI SPACE SpA. All right reserved.

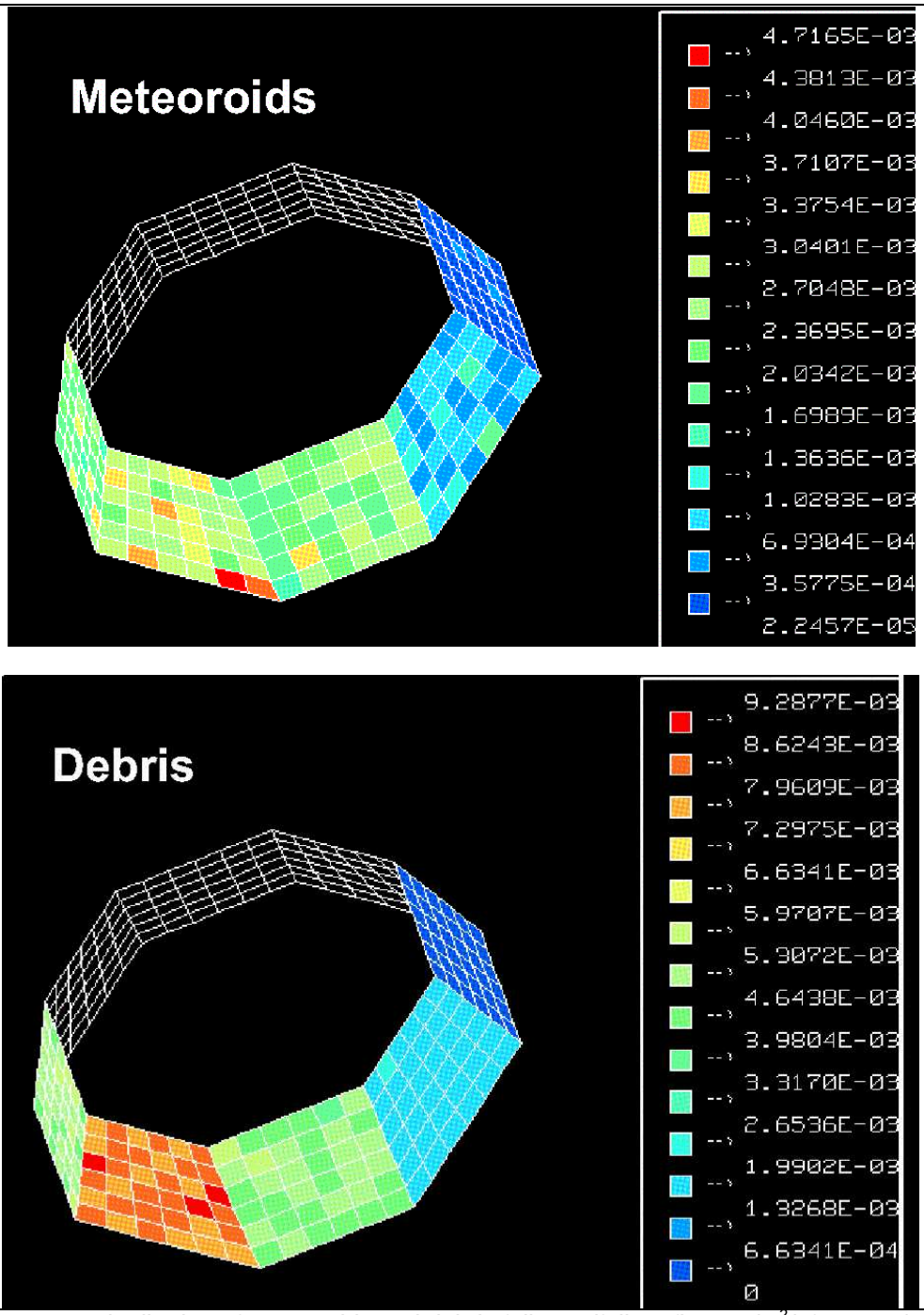

Figure 4-3 Distribution of meteoroids and debris failures (failure fluence/m^2) for DS 1/20/1

This configuration is out of requirements both for the PNP (98.4%) and the overall mass (7.2 Kg); for this reason different solution has been evaluated and in particular since the most impacts are located at the panels subjected to RAM direction, an optimisation of the panel configuration has been considered. The following table shows the final optimized configuration data.

Questo documento contiene informazioni di proprietà di CARLO GAVAZZI SPACE SpA. Tutti i diritti sono riservati.
All information contained in this document are property of CARLO GAVAZZI SPACE SpA. All right reserved.

DS configuration (Bumper Th./Core Th./Rear Wall Th.)	Total failures (debris)	Total failures (meteoroids)	Total PNP [%] both deb and meteo.	Total mass [Kg]
Panel 1&5: 0.4/23.6/1.0 Panel 2,3,4: 0.4/24.2/0.4 Panel 7: 0.4/23.0/1.6 Panel 6&8: 0.4/23.1/1.5	0.007605	0.002226	99.02	6.38

Table 4-3 Selected optimized configuration for RICH debris shield

The following figure show the RICH Debris Shield CAD model.

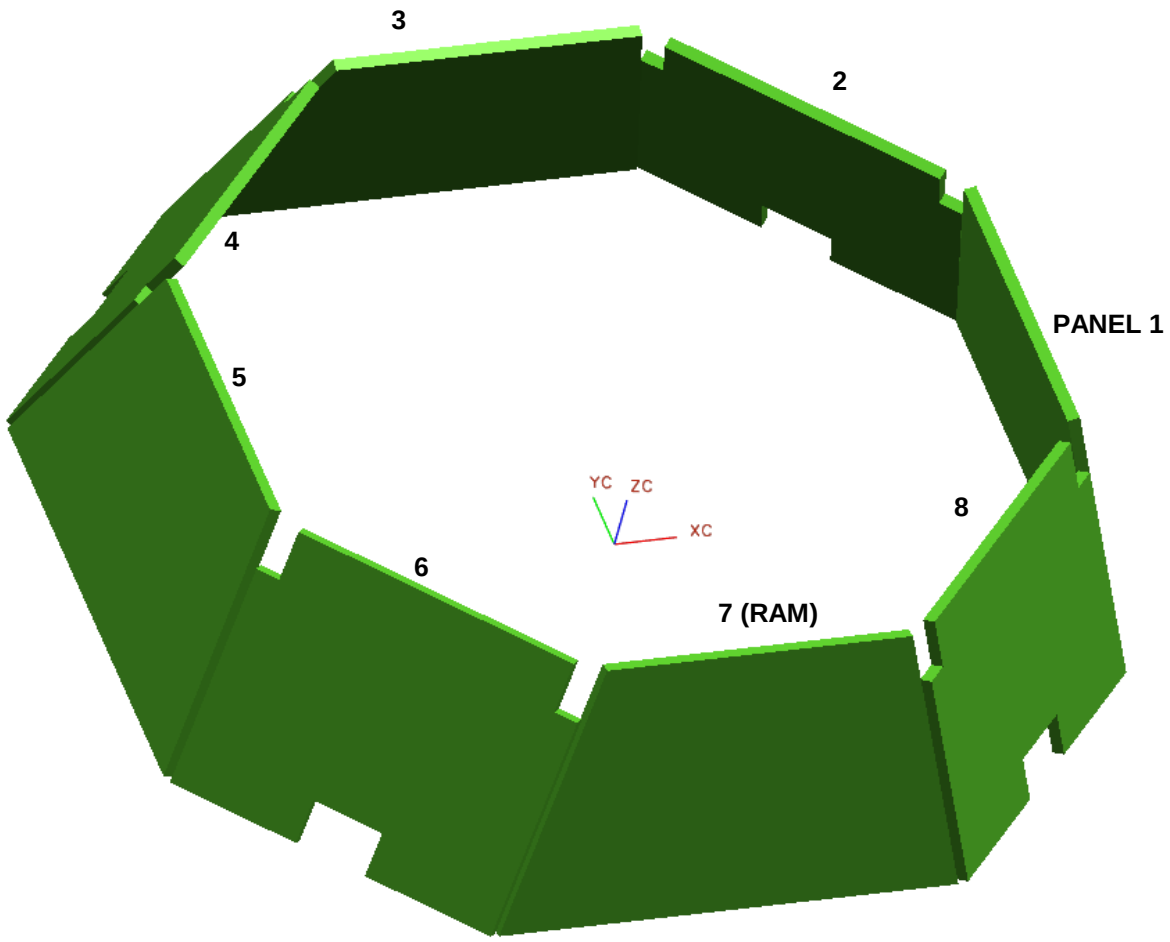

Figure 4-4 RICH DS CAD model

For AMS02 integration reason some cut outs are necessary in the final panels, however their effect are negligible with respect to the MOD analysis results. The *Figure 4-5* shows where the cut outs avoid the compenetration in the completed AMS02 model.

Questo documento contiene informazioni di proprietà di CARLO GAVAZZI SPACE SpA. Tutti i diritti sono riservati.
All information contained in this document are property of CARLO GAVAZZI SPACE SpA. All right reserved.

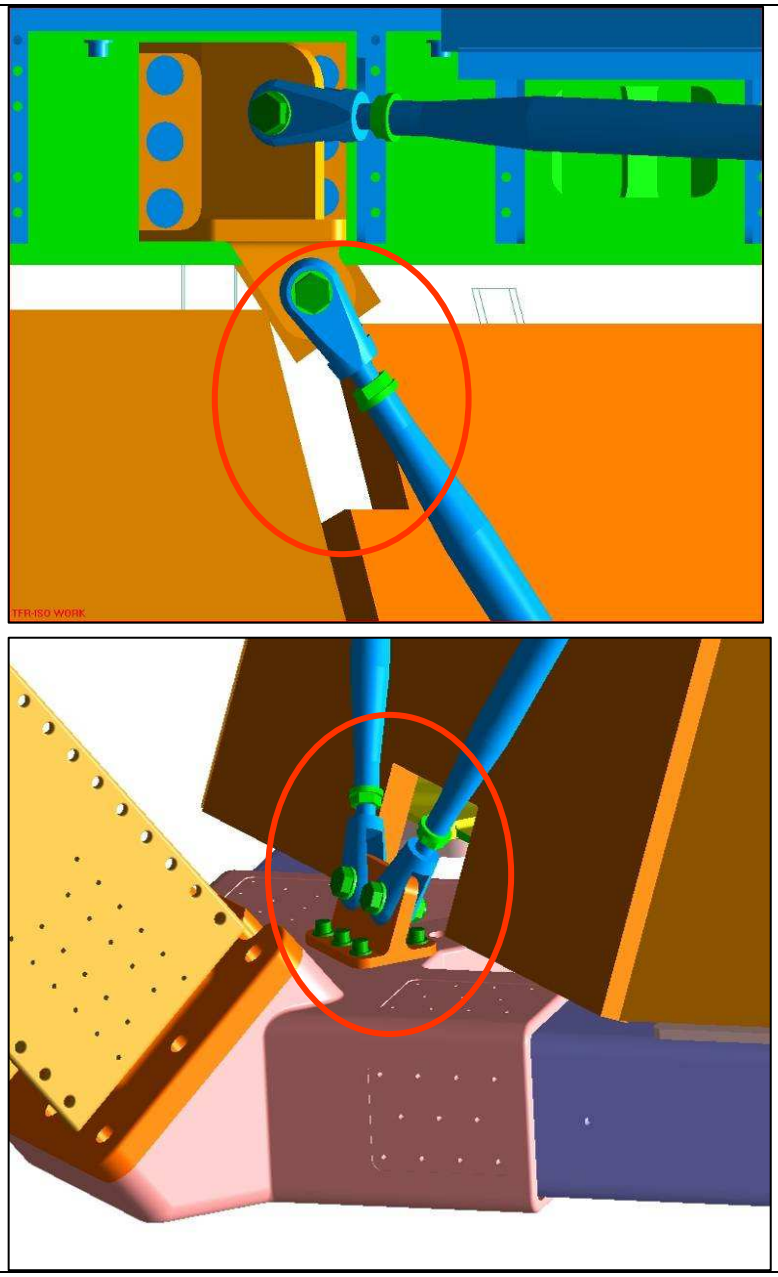

Figure 4-5 DS Panel cut outs detail wrt the AMS02 integrated model

The sandwich panel materials are summarized in the following table.

ITEM	MATERIAL
SKINS	Plain Wave fabric CFRP: T300 carbon fiber VICOTEX 1454 resin
CORE	HONEYCOMB: HEXCEL CR III-3/16-5056-.007-2.0

Table 4-4 Debris Shield materials

Questo documento contiene informazioni di proprietà di CARLO GAVAZZI SPACE SpA. Tutti i diritti sono riservati.
All information contained in this document are property of CARLO GAVAZZI SPACE SpA. All right reserved.

4.2 DEBRIS SHIELD BOUNDARY ELEMENTS

The Debris Shied boundary condition are connected by two elements respectively to the RICH external structure and to each other.

These elements are:

- DS brackets;
- DS Upper connections.

In order to allow the fixation of DS brackets an appropriate hole pattern has been implemented on the External structure.
The following figures show the DS brackets.

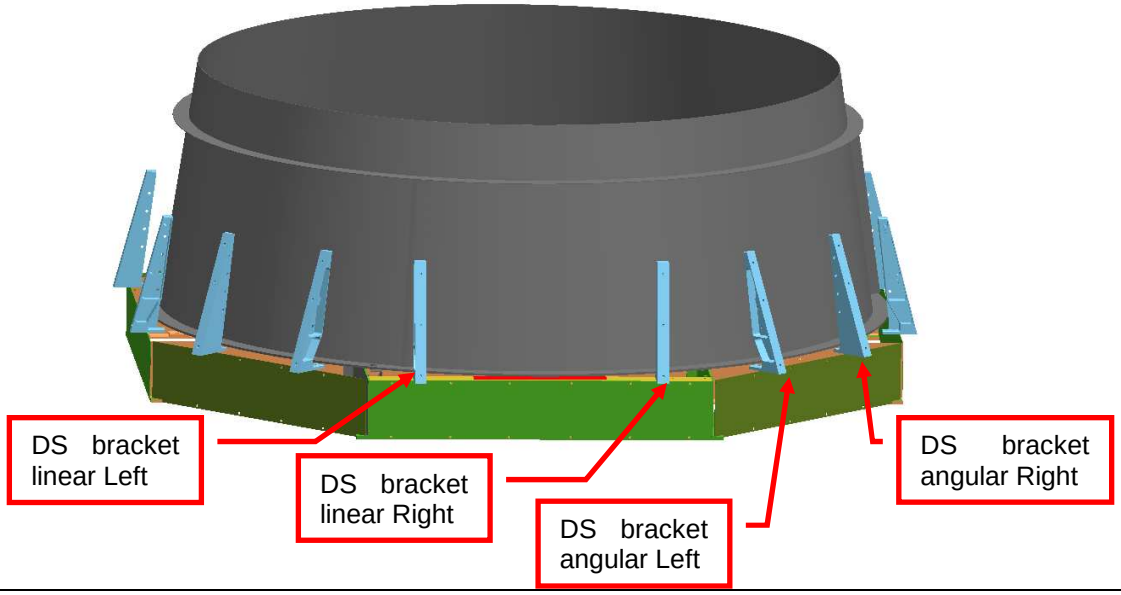

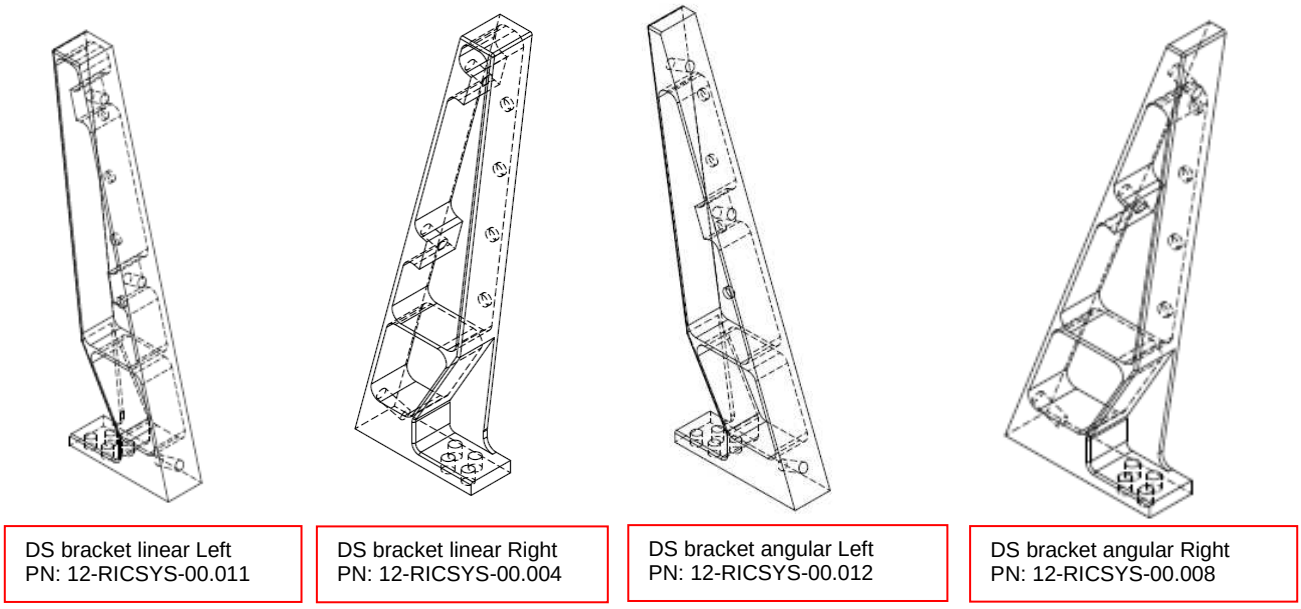

Figure 4-6 DS brackets

Questo documento contiene informazioni di proprietà di CARLO GAVAZZI SPACE SpA. Tutti i diritti sono riservati.
All information contained in this document are property of CARLO GAVAZZI SPACE SpA. All right reserved.

The following figures show the DS upper connections.

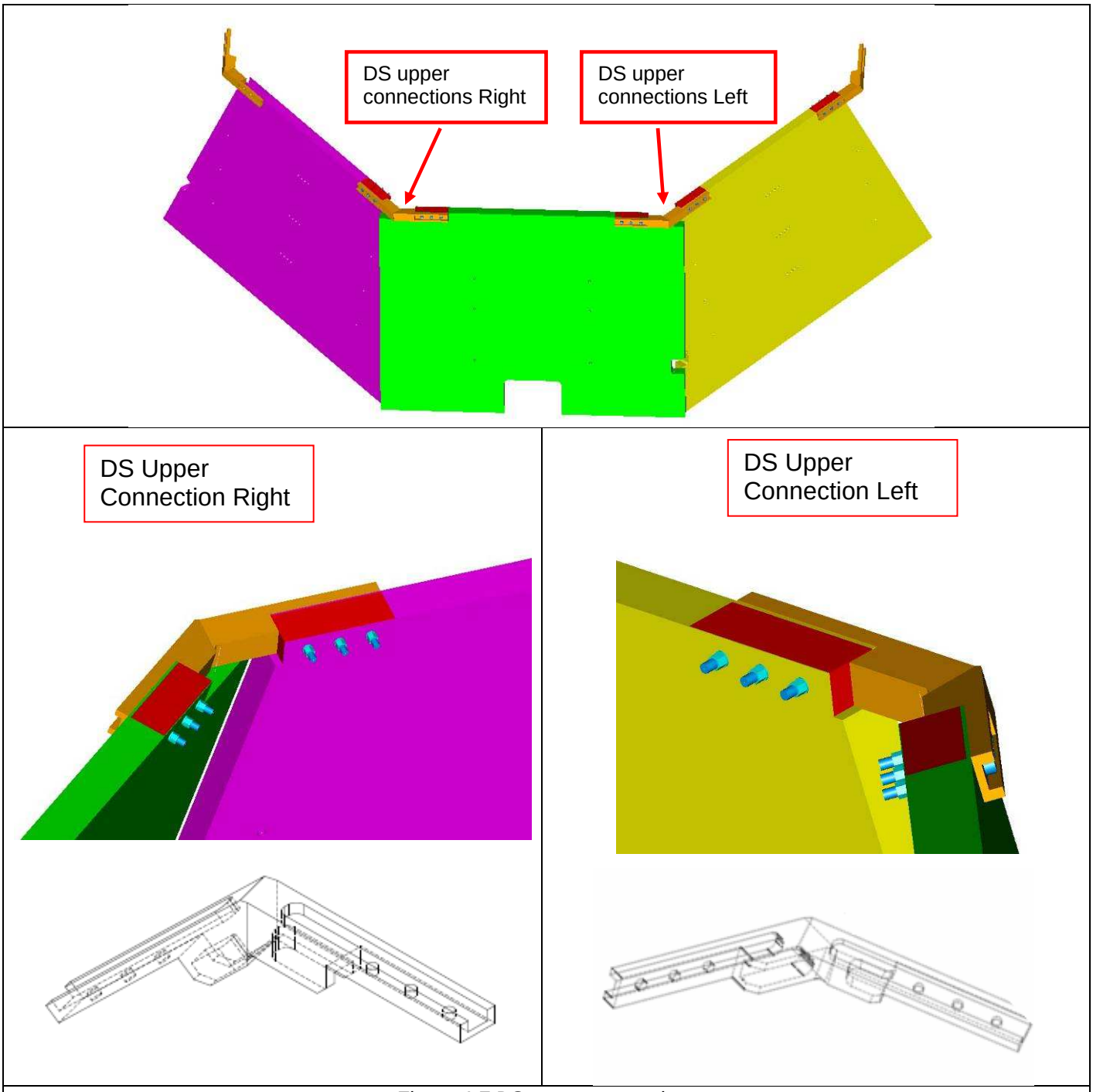

Figure 4-7 DS upper connections

The DS brackets and upper connections materials are summarized in the following table.

ITEM	MATERIAL
DS bracket	Al7075 T7351
DS upper connections	Al7075 T7351

Table 4-5 Debris Shield boundary elements materials

Questo documento contiene informazioni di proprietà di CARLO GAVAZZI SPACE SpA. Tutti i diritti sono riservati.
All information contained in this document are property of CARLO GAVAZZI SPACE SpA. All right reserved.

4.3 RICH SYSTEM INTERNAL HARNESS SUPPORTS

The RICH system harness is shown in the following figure.

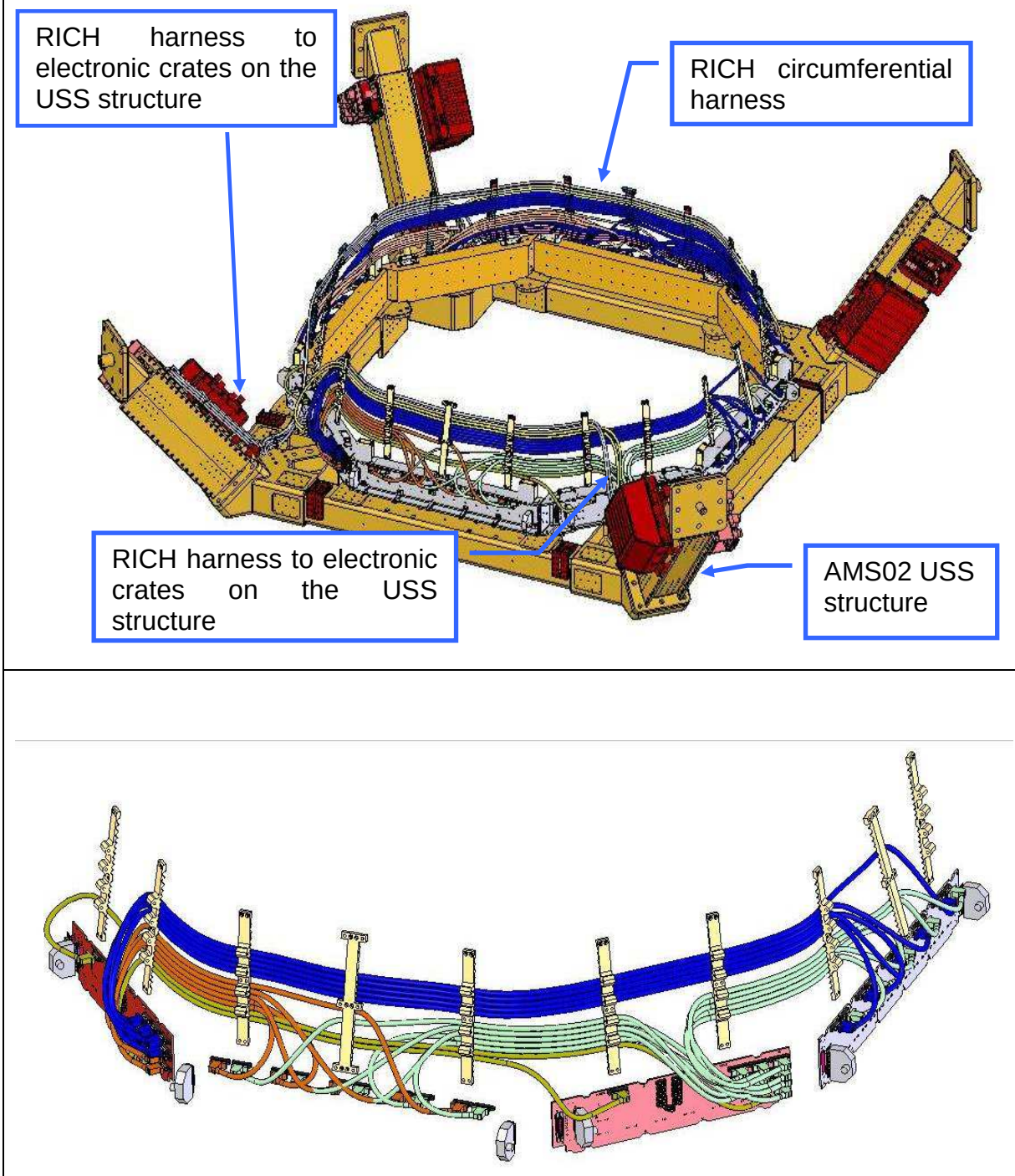

Figure 4-8 RICH system harness layout

In order to fix the RICH circumferential harness cable supports have been designed joined respectively to the DS brackets and Debris Shields them self. The following figure shows the cable supports installed on RICH.

Questo documento contiene informazioni di proprietà di CARLO GAVAZZI SPACE SpA. Tutti i diritti sono riservati.
All information contained in this document are property of CARLO GAVAZZI SPACE SpA. All right reserved.

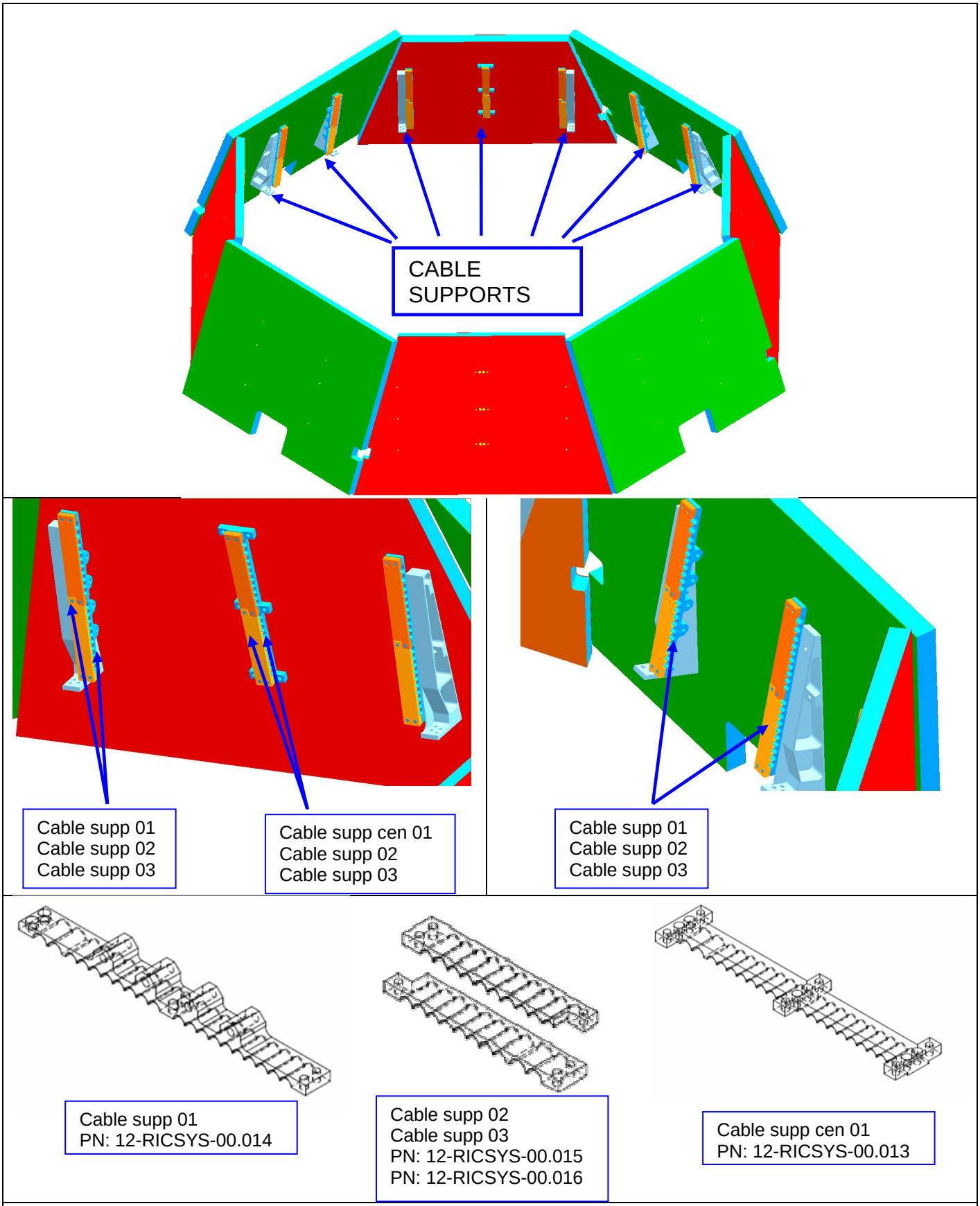

Figure 4-9 DS upper connections, general and detailed view

Questo documento contiene informazioni di proprietà di CARLO GAVAZZI SPACE SpA. Tutti i diritti sono riservati.
All information contained in this document are property of CARLO GAVAZZI SPACE SpA. All right reserved.

The cable supports materials are summarized in the following table.

ITEM	MATERIAL
Internal cable supports	PEEK 1000

Table 4-6 Internal cable support materials

4.4 RICH SYSTEM EXTERNAL HARNESS SUPPORTS

The following figure show the external harness supports placed on the LUSS.

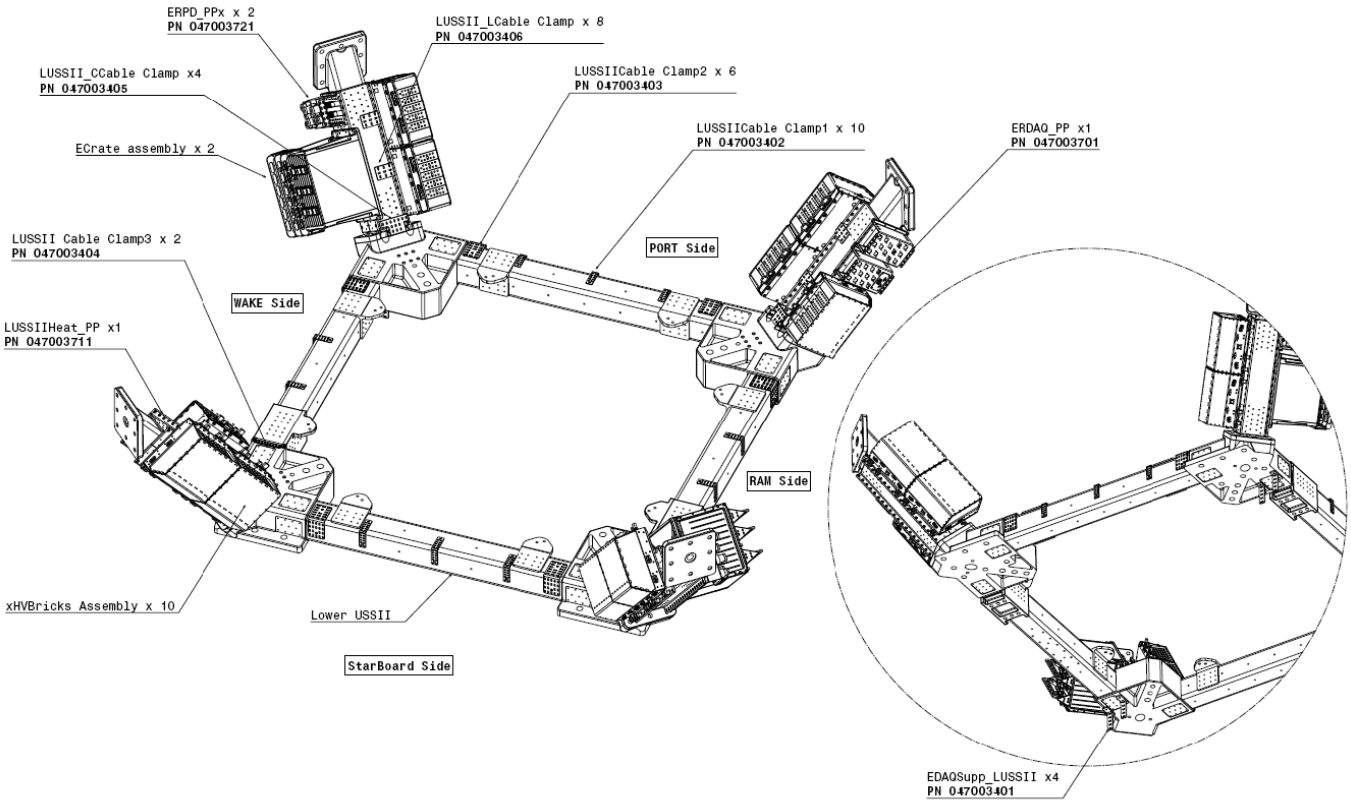

Figure 4-10 LUSS cable clamps CAD assembly

The RICH system used cable supports and balconies are shown in the following figure.

Questo documento contiene informazioni di proprietà di CARLO GAVAZZI SPACE SpA. Tutti i diritti sono riservati.
All information contained in this document are property of CARLO GAVAZZI SPACE SpA. All right reserved.

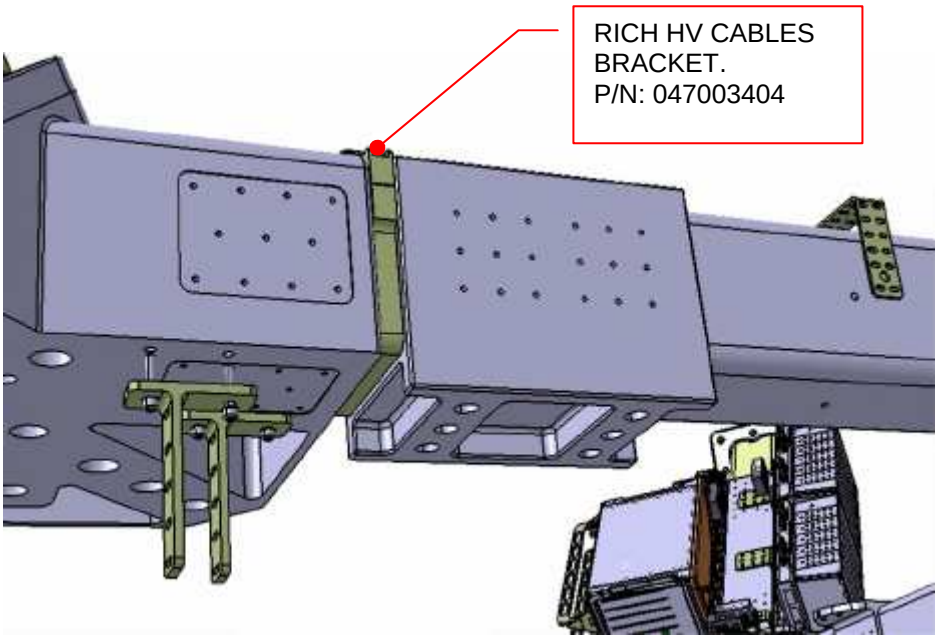

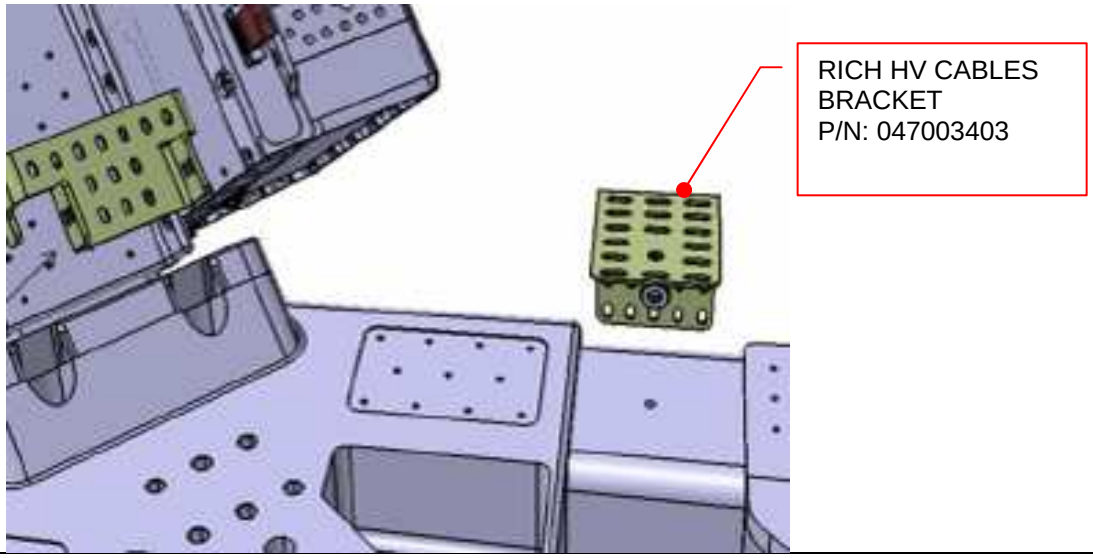

Figure 4-11 RICH system external cables supports and balconies.

The supports materials are summarized in the following table.

ITEM	MATERIAL
047003404	AL 7175 T7351
047003403	AL 5083 H111

Table 4-7 External cables supports and balconies

Questo documento contiene informazioni di proprietà di CARLO GAVAZZI SPACE SpA. Tutti i diritti sono riservati.
All information contained in this document are property of CARLO GAVAZZI SPACE SpA. All right reserved.

4.5 AEROGEL CONTAINER NAF TILES

The Aerogel & NaF container is made out of a carbon fiber composite material; the dodecagonal structure (C shaped profiles) is glued to the bottom plate.
The Aerogel tiles are housed in the dodecagonal octagonal structure; the NaF tiles in the central square one.
The bottom side of the container is closed hermetically by a PMMA transparent skin plate, which is glued and screwed to the dodecagonal structure.

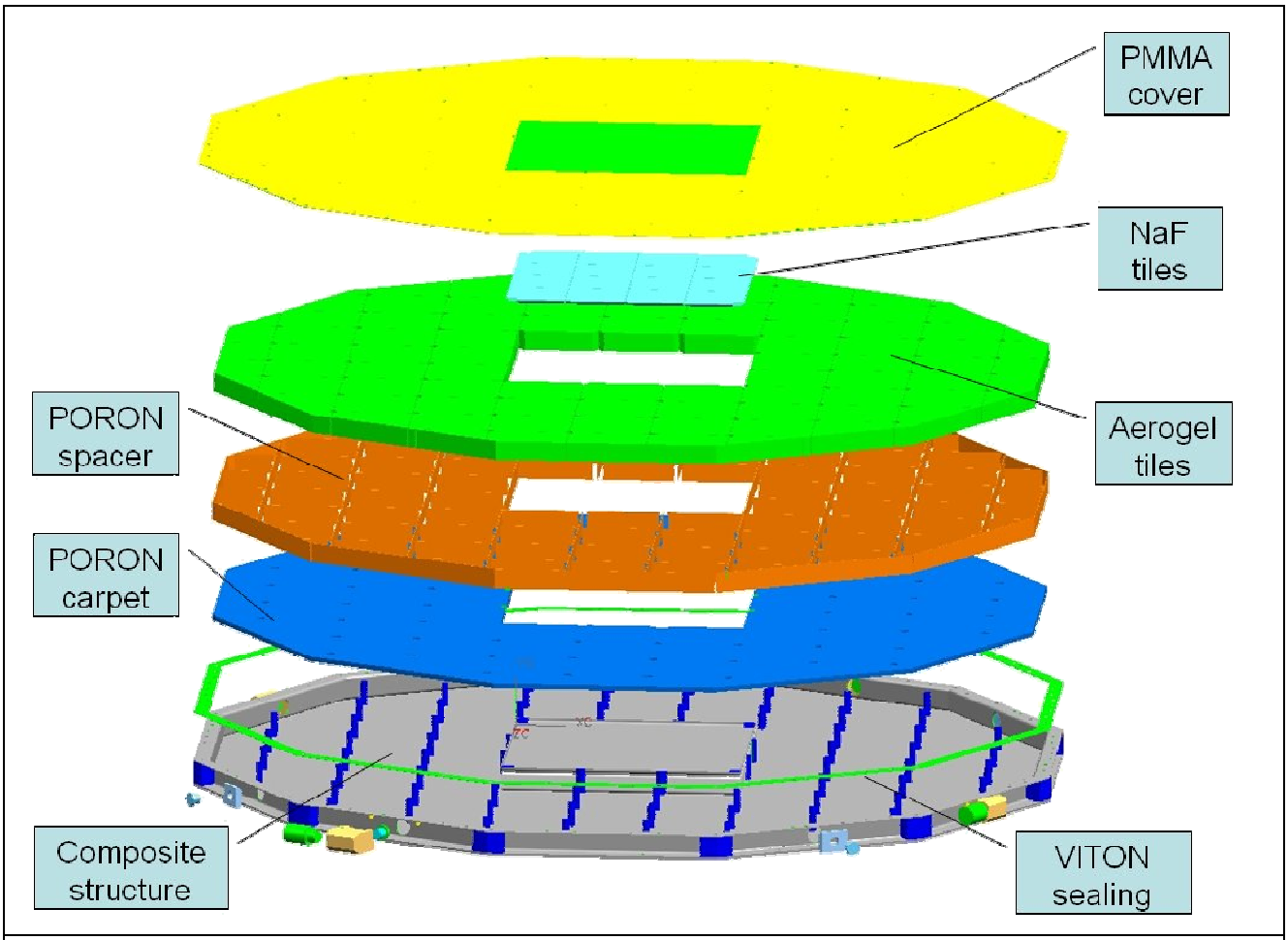

Figure 4-12 container exploded view (upside down view)

The NaF container design driver is the tiles thickness of 5 mm. In particular the NaF container has to guarantee the tiles accommodation and to fill the total Aerogel container thickness. For this reason a spacer is necessary to assure the correct thickness of the assembly. The following figure shows an exploded view of the NaF container.

Questo documento contiene informazioni di proprietà di CARLO GAVAZZI SPACE SpA. Tutti i diritti sono riservati.
All information contained in this document are property of CARLO GAVAZZI SPACE SpA. All right reserved.

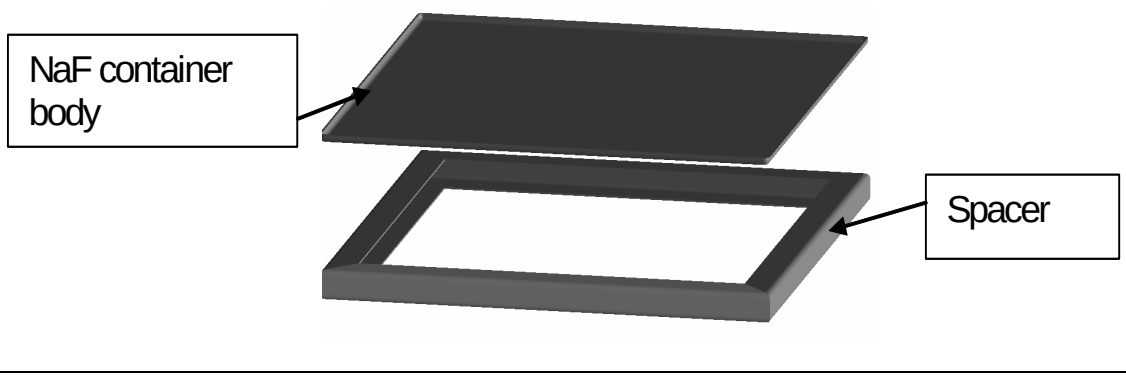

Figure 4-13. NaF container exploded view

In order to assure a correct positioning of Aerogel tiles the NaF container side length has to be 347 mm. As shown in the following figure, three Aerogel tiles are placed for each external side of NaF container.

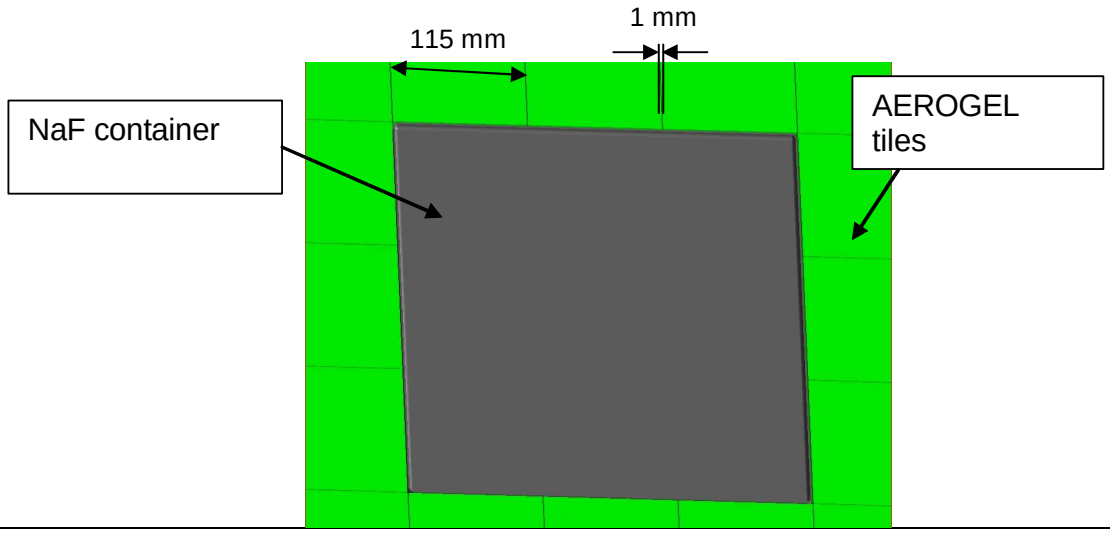

Figure 4-14. Aerogel tiles and NaF container overall view

The following figure show the NaF container body dimensions.

Questo documento contiene informazioni di proprietà di CARLO GAVAZZI SPACE SpA. Tutti i diritti sono riservati.
All information contained in this document are property of CARLO GAVAZZI SPACE SpA. All right reserved.

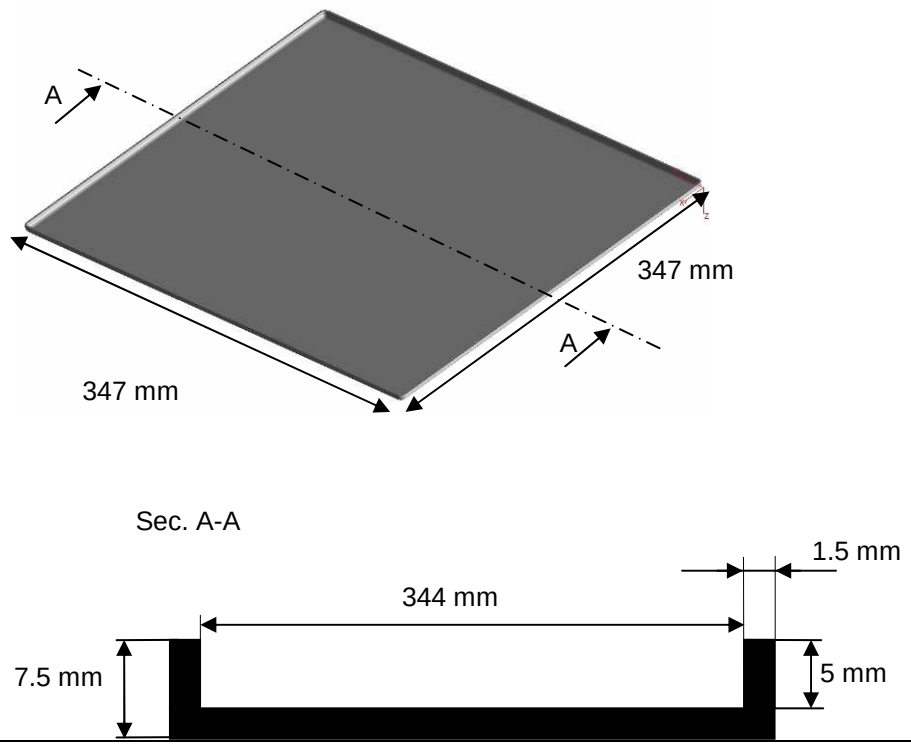

Figure 4-15 NaF container body dimensions

The following figure shows the spacer dimensions.

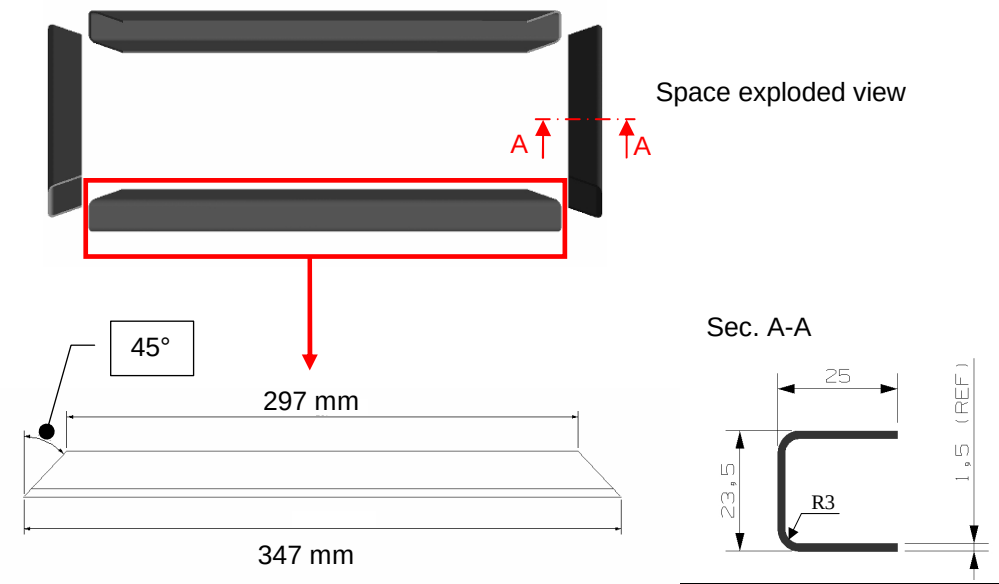

Figure 4-16 NaF container spacer dimensions

The NaF container installed on the Aerogel container structure is shown in the following image.

Questo documento contiene informazioni di proprietà di CARLO GAVAZZI SPACE SpA. Tutti i diritti sono riservati.
All information contained in this document are property of CARLO GAVAZZI SPACE SpA. All right reserved.

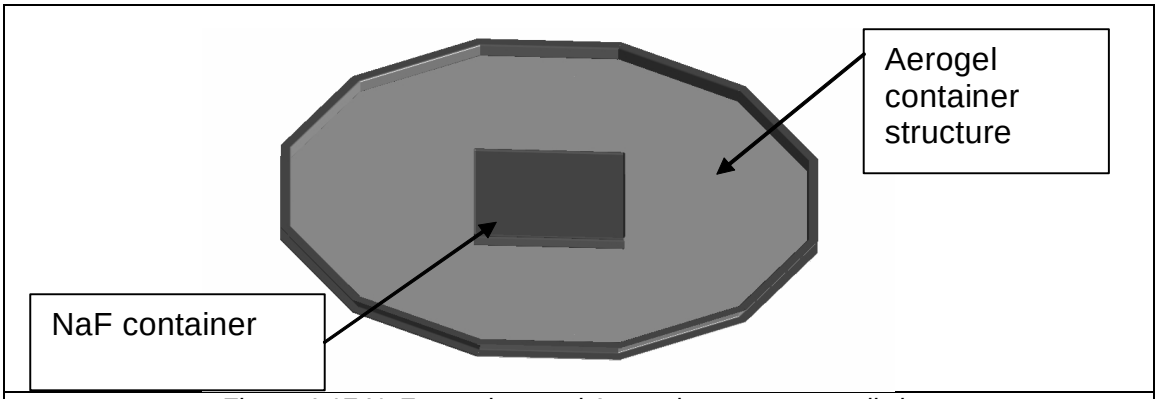

Figure 4-17 NaF container and Aerogel structure overall view

Sixteen NaF tiles are placed in the NaF container. These are positioned maintaining an inter-distance of 1mm each other. This gap is filled by a silicone filler, the DOW CORNING 93-500. The following figure shows the final assembly of Aerogel and NaF tiles.

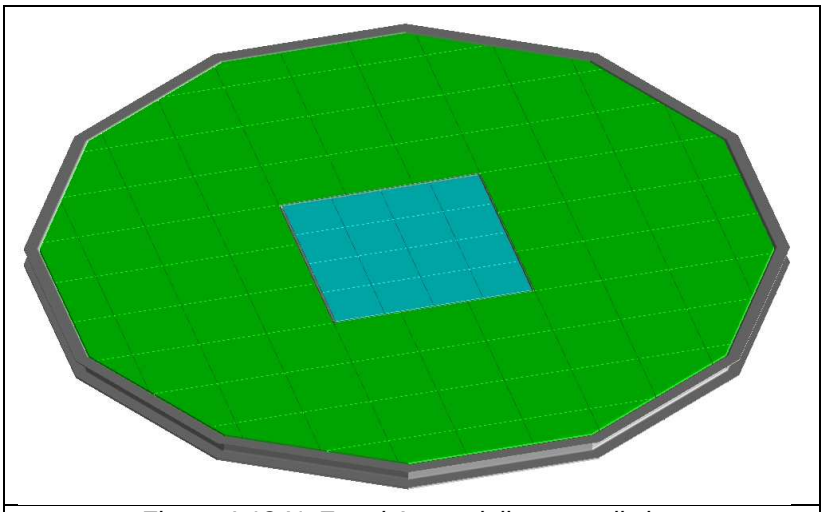

Figure 4-18 NaF and Aerogel tiles overall view

The NaF container materials are summarized in the following table.

ITEM	MATERIAL
NaF container body	Plain Wave fabric CFRP: T300 carbon fiber
Spacer	Plain Wave fabric CFRP: T300 carbon fiber
Filler	DOW CORNING 93-500

Table 4-8 NaF container materials

Questo documento contiene informazioni di proprietà di CARLO GAVAZZI SPACE SpA. Tutti i diritti sono riservati.
All information contained in this document are property of CARLO GAVAZZI SPACE SpA. All right reserved.

4.6 AEROGEL CONTAINER PURGING SYSTEM

The Aerogel container, after being sealed, will be filled with a neutral gas (nitrogen) thanks to a dedicated inlet valve. When the container is stored in the clean room or, in any case, when it can be easily reached, it can be refilled with the neutral gas in order to compensate any eventual leakage and thus to avoid the inlet of external air (humidity and dirty particles). In all the other cases, and so during airborne transportation from the integration site to other integration or test site, or when the detector will be on the launch pad, the neutral gas refilling will be impossible, an so an expandable reservoir is used. The Teflon bag shown in the following image is the selected expandable reservoir.

Figure 4-19 expandable bag

The bag is connected to the Aerogel container with a steel tube by swagelocks. The bag positioning is assured by an aluminum cover fixed to the Lower TOF. The following figures show the reservoir connected to the Aerogel container and the reservoir fixation to the LTOF.

Questo documento contiene informazioni di proprietà di CARLO GAVAZZI SPACE SpA. Tutti i diritti sono riservati.
All information contained in this document are property of CARLO GAVAZZI SPACE SpA. All right reserved.

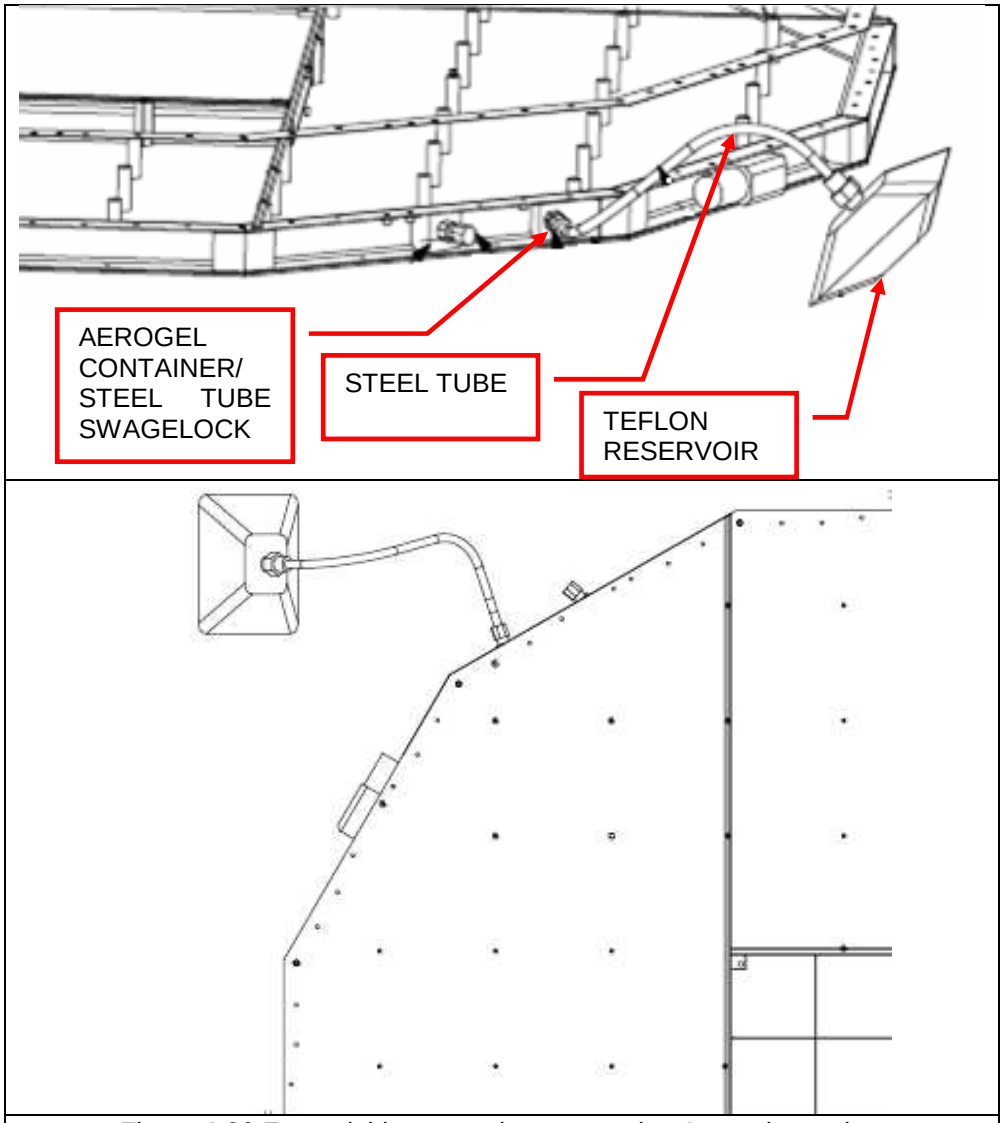

Figure 4-20 Expandable reservoir connected to Aerogel container

Questo documento contiene informazioni di proprietà di CARLO GAVAZZI SPACE SpA. Tutti i diritti sono riservati.
All information contained in this document are property of CARLO GAVAZZI SPACE SpA. All right reserved.

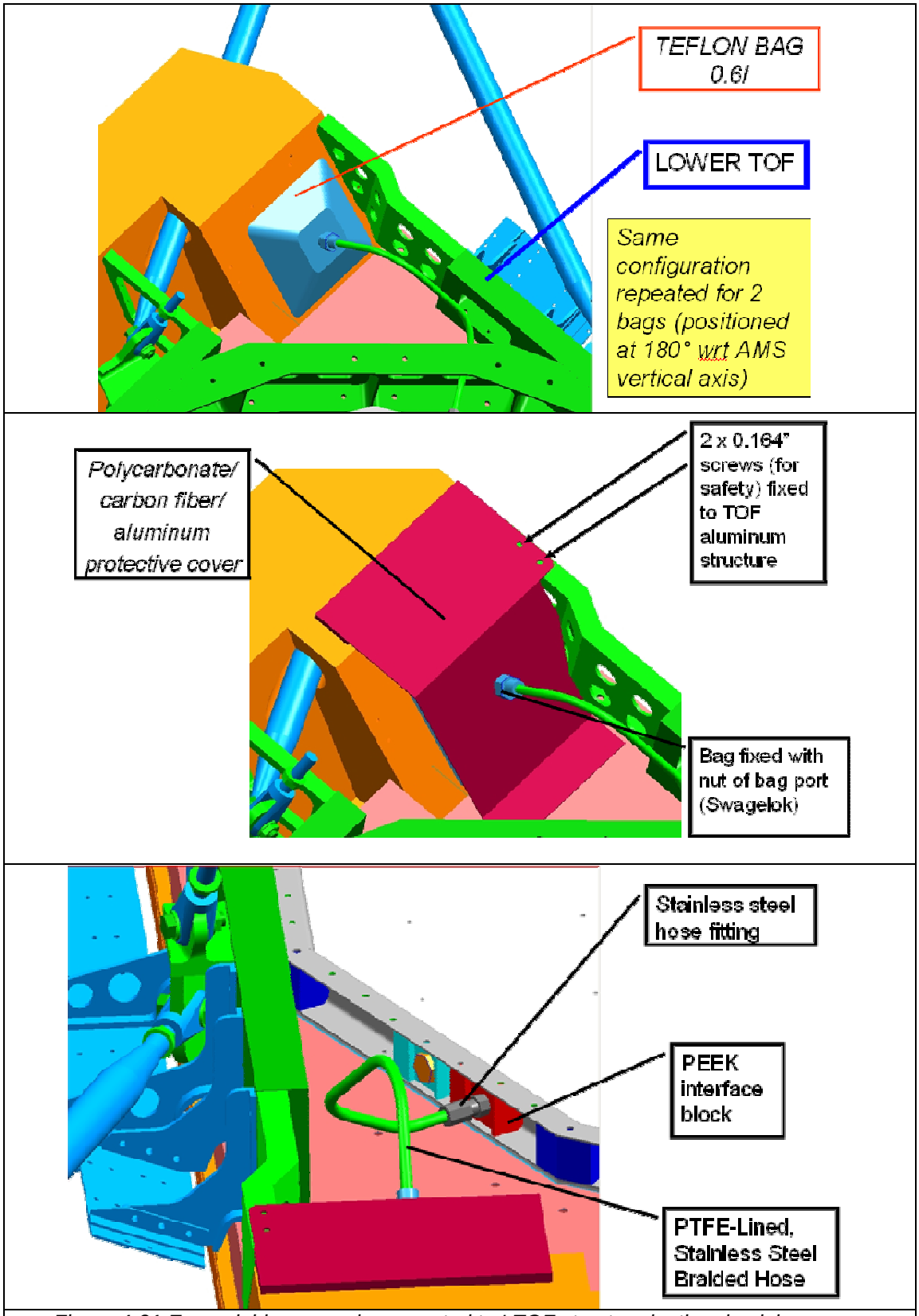

Figure 4-21 Expandable reservoir connected to LTOF structure by the aluminium cover

A detail of tube connection performed by using swagelock is provided in the following figure.

Questo documento contiene informazioni di proprietà di CARLO GAVAZZI SPACE SpA. Tutti i diritti sono riservati.
All information contained in this document are property of CARLO GAVAZZI SPACE SpA. All right reserved.

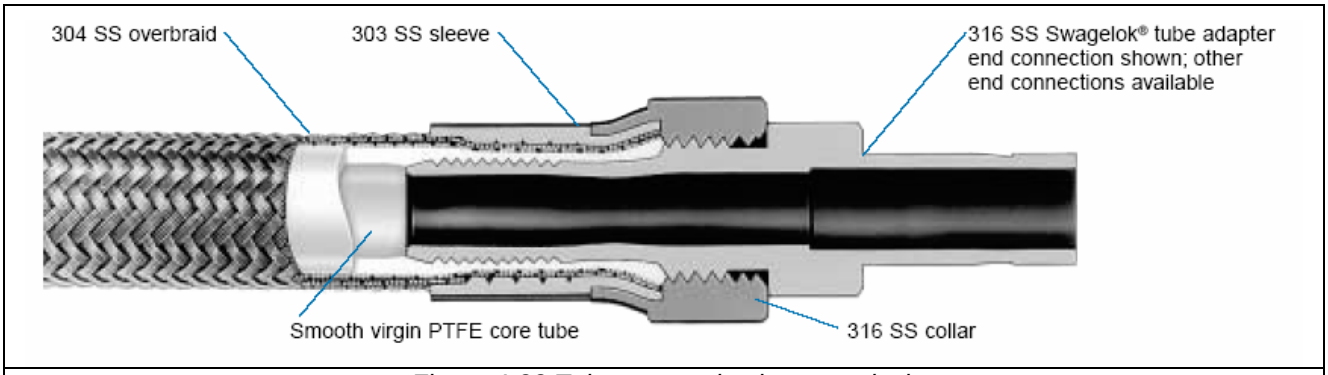

Figure 4-22 Tube connection by swagelock

The following figure shows the connection of Aluminum cover and the LTOF structure.

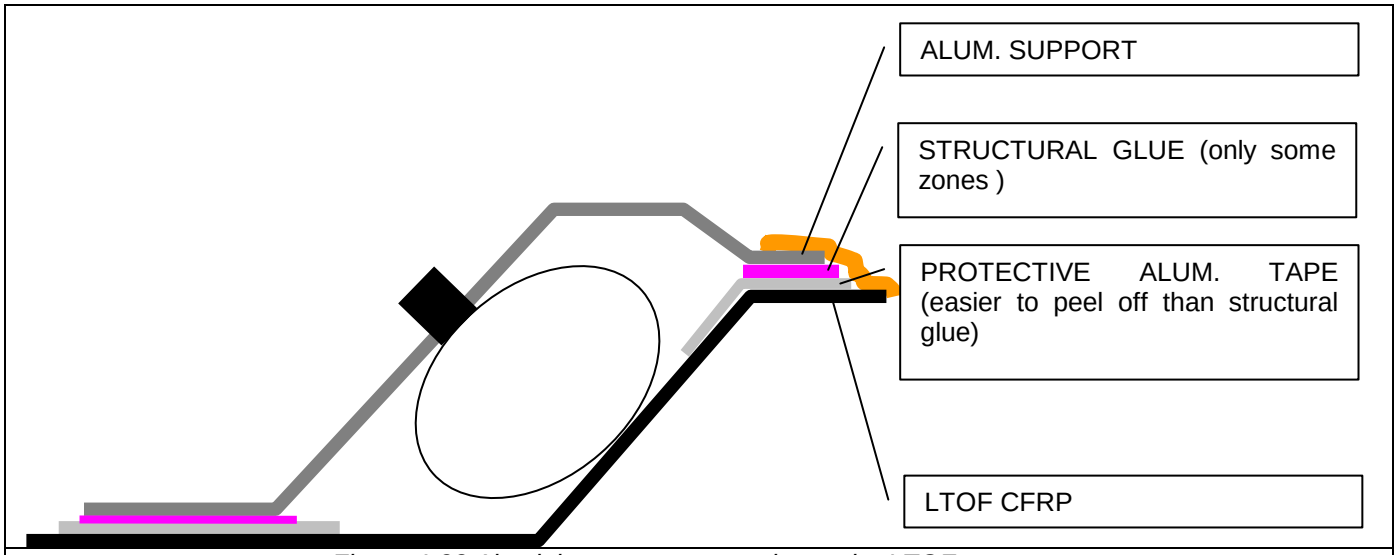

Figure 4-23 Aluminium cover connection to the LTOF structure

The volume of the neutral gas that can go in and out when there is a change in the environmental pressure is the inner volume of the container minus the volume of the tiles, the spacer and the carpet and corresponds to about 0.5 liters (0.005m^3). Two (2) bags of 0.6 liters each have been added to the aforementioned volume, leading to a total volume of 1.7 liters.
Four cases have been considered:

1) airborne transportation:
2) launch site pressure variation due to air pressure change
3) launch site pressure variation due to air temperature change
4) launch

1. airborne transportation:

initial conditions: P1 = 101300 Pa - T1 = 293K – V1 = 1.7 l
flight conditions : P2 = 75000 Pa - T2= 273K
landing conditions P3= 101300 Pa - T3= 293K
(the inlet valve is closed by a “remove before flight” cap)

The bags are full of air, so due to pressure decrease, 0.139 mol of air go out of the container (volume = const). During landing, the bags are compressed by increasing pressure till a total volume (container + bags) of 1.37 litres.

Questo documento contiene informazioni di proprietà di CARLO GAVAZZI SPACE SpA. Tutti i diritti sono riservati.
All information contained in this document are property of CARLO GAVAZZI SPACE SpA. All right reserved.

2. launch site pressure variation due to air pressure change

initial conditions: P1 = 101300 Pa - T1 = 293K – V1 = 1.2 l
pressure increase : P2 = 106300 Pa - T2= 293K
pressure decrease P3= 96300 Pa - T3= 293K
(the inlet valve cap has been removed)

Maximum pressure variations come from one year data related to June 2004 –June 2005 Orlando statistics: Max =1034 mbar – min = 981 mbar (max delta = 53 mbar). This means about +/-26 mbar with respect to nominal 1013 mbar. A safety factor = 2 has been used for pressure variation: +/-50 mbar (= 5000 Pa) with respect to the nominal 1013 mbar has been used in this case.

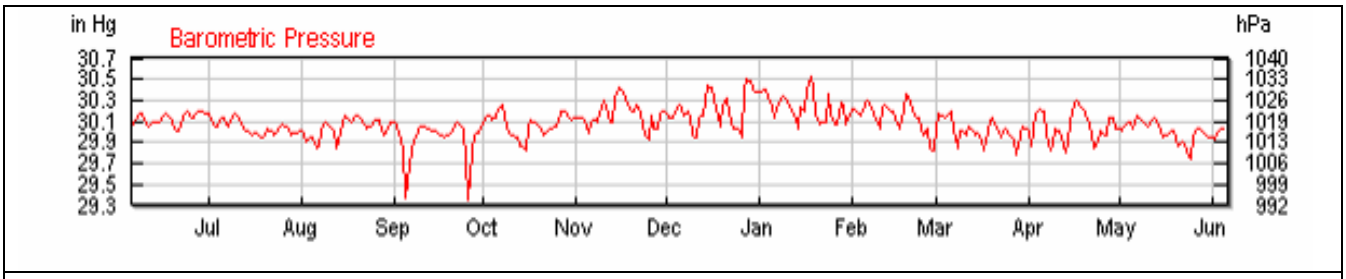

Figure 4-24: June 2004 –June 2005 Orlando weather statistics

The bags are half full of air (0.3 litres each); due to pressure increase, the total volume (container + bags) decrease to 1.14 litres ; no gas goes in or out.
When pressure decreases, the bags volume increases 1.26 litres; no gas goes in or out.

3. launch site pressure variation due to air temperature change

initial conditions: P1 = 101300 Pa - T1 = 293K – V1 = 1.2 l
pressure increase : P2 = 101300 Pa - T2= 323K
pressure decrease P3= 101300 Pa - T3= 263K
(the inlet valve cap has been removed)

A +/- 30°C variation with respect to the initial 2 0°C situation has been taken into consideration. As an assumption, the atmospheric pressure is constant and the container changes the temperature in isothermal way with respect to the environment.

The bags are half full of air (0.3 litres each), so due to temperature increase, the total volume (container + bags) increase to 1.32 litres ; no gas goes in or out.
When temperature decreases the total volume (container + bags) decreases to 1.08 litres ; no gas goes in or out.

4. launch

initial conditions: P1 = 101300 Pa - T1 = 293K – V1 = 1.2 l
final conditions : P2 = 0 Pa
(the inlet valve cap has been removed)

During launch phase, all the gas inside the container and the bags is evacuated thru the outlet valves.

Questo documento contiene informazioni di proprietà di CARLO GAVAZZI SPACE SpA. Tutti i diritti sono riservati.
All information contained in this document are property of CARLO GAVAZZI SPACE SpA. All right reserved.

4.7 RICH SYSTEM OPTICAL SEALING

The optical sealing of RICH is one of the most critical issues of the design because if stray-light penetrates the detector field of view the RICH mission fails.
The best solution to assure a reliable cover to the detector is to use two blankets, an upper and a lower ones.
In particular the upper cover is fixed to the Aerogel container in between aluminum frame and PMMA, while the lower blanket is fixed to the RICH bottom cover. These two blankets are glued at Debris Shield level.
The following figure show the optical seal (upper and lower blankets) envelope.

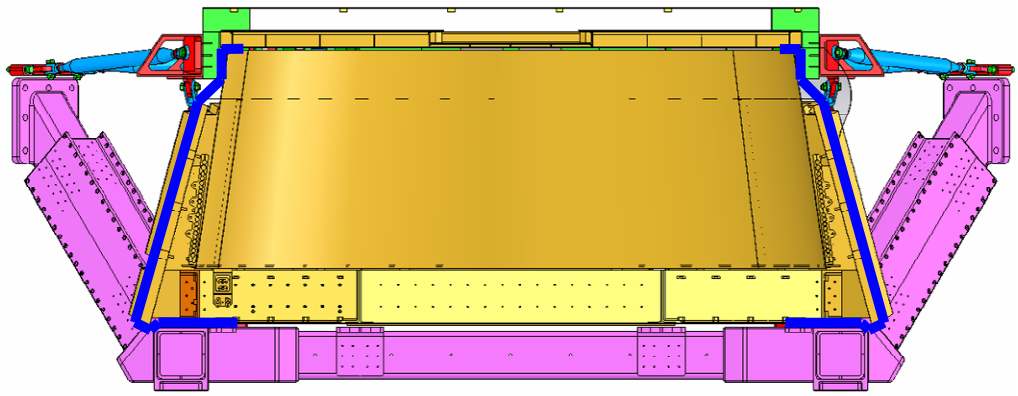

Figure 4-25 Optical seal envelope

Both upper and lower covers have been divided in 2 parts in order to make easier the realization process. In particular the RICH bottom cover full scale drawing shall be placed on the black cloth on ground and the hole pattern to fix the cover to the RICH lower part shall be realized. The same technique shall be applied to the Aerogel container. The following figure shows this process made on a specimen used for a fit check.

Questo documento contiene informazioni di proprietà di CARLO GAVAZZI SPACE SpA. Tutti i diritti sono riservati.
All information contained in this document are property of CARLO GAVAZZI SPACE SpA. All right reserved.

Figure 4-26 Optical seal specimen for the lower blancket

The two parts of the covers shall be glued; in order to determine the best glue in terms of stiffness and flexibility a test campaign has been performed on the following adhesive:

- AV 138 M;
- Nusil;
- 3M EC2216.

Flexibility and tensile tests have been performed for all the listed glues; the following figures show how the test has been conducted.

Questo documento contiene informazioni di proprietà di CARLO GAVAZZI SPACE SpA. Tutti i diritti sono riservati.
All information contained in this document are property of CARLO GAVAZZI SPACE SpA. All right reserved.

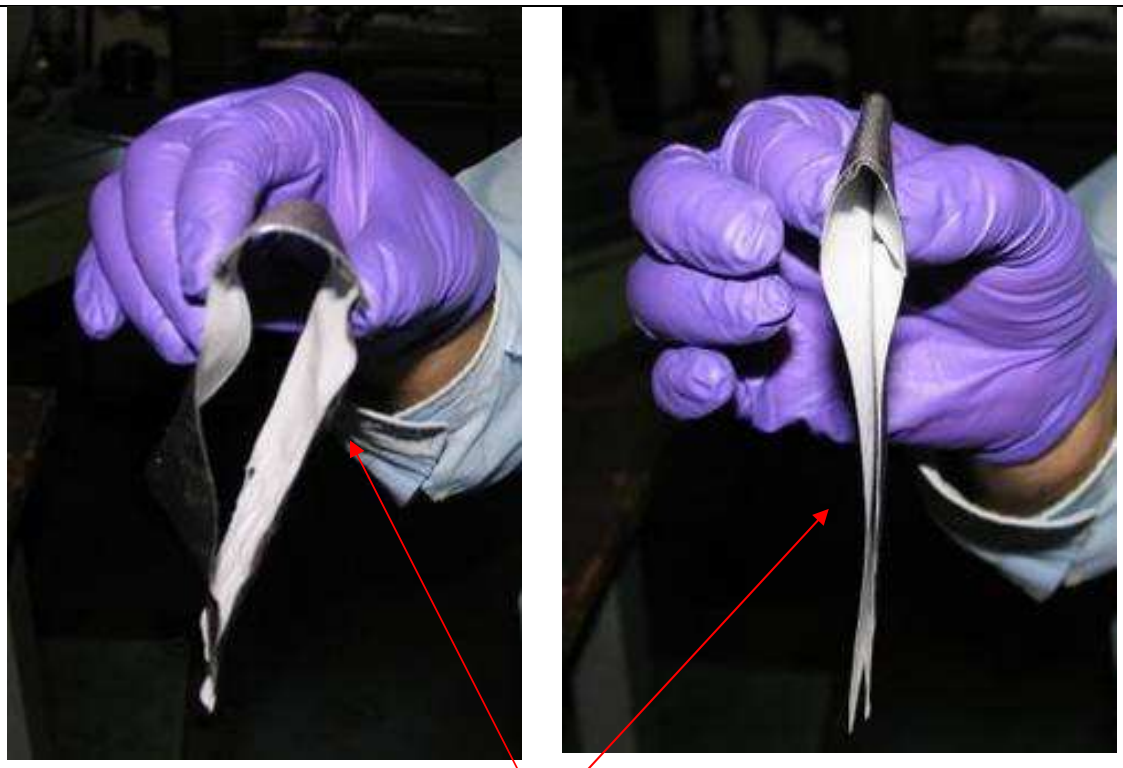

The specimens have been manually bended and the bonded junction brittleness has been checked manually

Figure 4-27 Flexibility check

A controlled shear force has been applied to the specimens and the ultimate strength has been measured

Figure 4-28 Tensile test

The following table shows the obtained results:

Adhesive type	Bending radius	Ultimate force [Kg]	Remarks
AV 138 M	--	10-20	Not possible to bend, too brittle.
NUSIL	3 mm	5-10	
3M EC2216	15 mm	>35	The glue resist up to the instrument out of scale

Table 4-9 Different adhesive test results summary

Finally the 3M EC2216 has been selected to perform the bonded connection between the covers.

Questo documento contiene informazioni di proprietà di CARLO GAVAZZI SPACE SpA. Tutti i diritti sono riservati.
All information contained in this document are property of CARLO GAVAZZI SPACE SpA. All right reserved.

The optical seal materials are summarized in the following table.

ITEM	MATERIAL
Optical seal	Black cloth
Glue	3M 2216

Table 4-10 Optical seal materials

5. INCREMENTAL DESIGN STRUCTURAL ANALYSIS

In this chapter the structural analysis of the updated RICH model is presented. The FEM model of RD2 has been updated modelling the following items:

- Grid covers;
- Debris Shield;
- Debris Shield support brackets;
- Debris Shield upper connection;
- Harness weight.

The Finite Element Model file name is: RICH_SYS_FINAL_MODEL.bdf.
In particular the dynamic analysis of the complete RICH system is shown (chp. 5.14), while the structural verification of the added elements only is presented (chp. 5.15.1).
The cable supports (both internal and external) structural analysis has been performed separately from the RICH system model and it is shown in the chapter 5.15.1 .

Finally the venting analysis for the complete system considering the optical seal and Aerogel container too is described in chapter 5.17 .

Questo documento contiene informazioni di proprietà di CARLO GAVAZZI SPACE SpA. Tutti i diritti sono riservati.
All information contained in this document are property of CARLO GAVAZZI SPACE SpA. All right reserved.

5.1 VERIFIED ITEMS OF RICH

In the following tables the verified items are showed:

RICH VERIFIED ITEMS				
ITEM	**PART NUMBER**	**MATERIAL**	**FAILURE**	**REFERENCE PAGE**
EXTERNAL STRUCTURE	13-RICSYS-00.001 13-RICSYS-00.002 13-RICSYS-00.003 13-RICSYS-00.004 13-RICSYS-00.005 13-RICSYS-00.006 13-RICSYS-00.007	AL 7075 T7351	Strength	62
DEBRIS SHIELD	12-RICSYS-00.00567	CFRP / HONEYCOMB	Strength	63
DEBRIS BRACKETS	12-RICSYS-00.004 12-RICSYS-00.008 12-RICSYS-00.011 12-RICSYS-00.012	AL 7075 T7351	Strength	64
DEBRIS UPPER CONNECTION		AL 7075 T7351	Strength	64
INTERNAL CABLE SUPPORT	12-RICSYS-00.013 12-RICSYS-00.014 12-RICSYS-00.015 12-RICSYS-00.016	PEEK 1000	Strength	64
EXTERNAL CABLE SUPPORT	047003403 047003404	AL 5083 AL 7075 T7351	Strength	
JOINT 7	NAS 1351N3	A286 (160ksi)	Strength, bearing	73
JOINT 8	NAS 1351N3	A286 (160ksi)	Strength, bearing	74
JOINT 9	NAS 1351N3	A286 (160ksi)	Strength, bearing	74

Table 5-1: Verified Items

FAILURE	VERIFICATION APPLIED
Strength	Von Mises on shells
	Maximum combined on bars
	TSAI WU on CFRP
	Combined/ Intracell Buckling / Wrinkling for Honeycomb
Bolt	Separation / Tension / Thread shear / Shear / Bending / Combined

Table 5-2: Verification Applied

5.2 USED SOFTWARE

The software used for FEM pre and post processing is MSC/PATRAN 2005.
The software used for Finite Element analysis is MSC/NASTRAN V2005.

Questo documento contiene informazioni di proprietà di CARLO GAVAZZI SPACE SpA. Tutti i diritti sono riservati.
All information contained in this document are property of CARLO GAVAZZI SPACE SpA. All right reserved.

5.3 MODEL UNITS

Default FEM units (otherwise specified) are:

- Length [m]
- Masses [Kg]
- Forces [N]
- Moments [Nm]
- Materials densities [Kg/m^3]
- Young's modules [N/m^2]
- Stresses [N/m^2]
- Displacements [m]

5.4 MODEL COORDINATE SYSTEM

For the RICH model and for the external cable supports, the AMS-02 coordinate system (Coord 0 in Figure 5-1) is used:

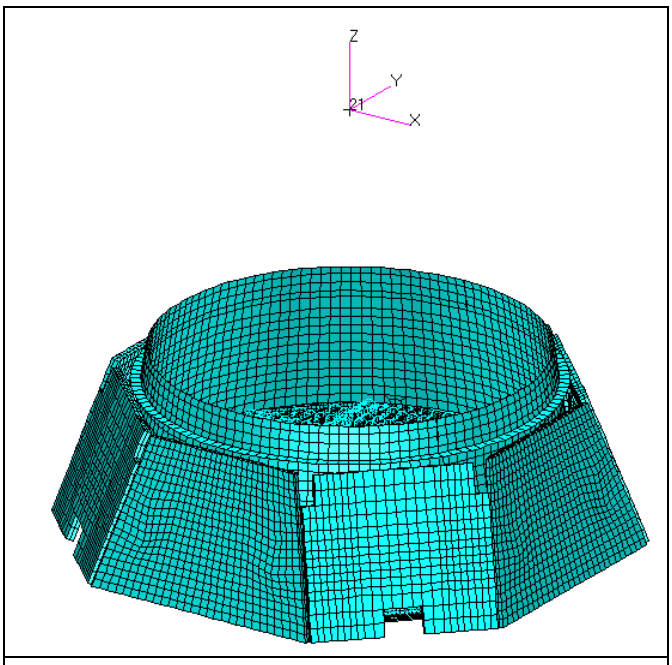

Figure 5-1: AMS-02 coordinate system

In the following figure two views of the position of the AMS-02 CoG are presented:

Questo documento contiene informazioni di proprietà di CARLO GAVAZZI SPACE SpA. Tutti i diritti sono riservati.
All information contained in this document are property of CARLO GAVAZZI SPACE SpA. All right reserved.

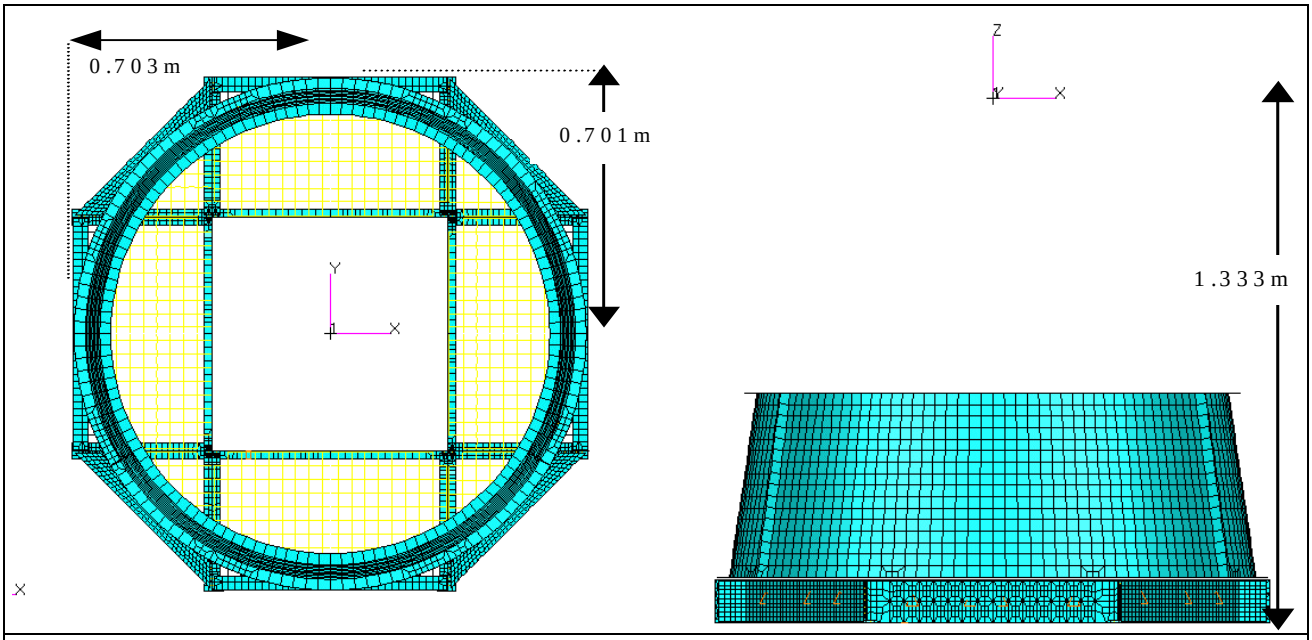

Figure 5-2: AMS-02 coordinate system

For the internal cable supports the used analysis coordinate system is shown in the following figure.

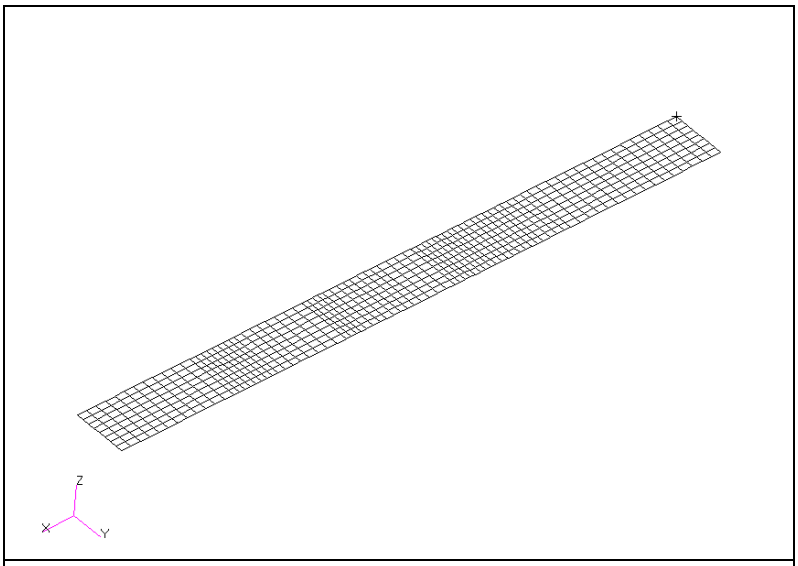

Figure 5-3: RICH cable support coordinate system

Questo documento contiene informazioni di proprietà di CARLO GAVAZZI SPACE SpA. Tutti i diritti sono riservati.
All information contained in this document are property of CARLO GAVAZZI SPACE SpA. All right reserved.

5.5 MODEL MATERIALS

In the following tables

- the properties of each materials for the added part s to the RD2 model
- the items
- the corresponding NASTRAN card

are shown.
In the evaluation of the MoS, all allowable stresses have been reduced by a factor of 6% in order to account for thermal effect.

5.5.1 AL 7075 T7351

7075 Aluminium Alloy		
Source	MIL-HDBK-5H	
Specification	AMS 4078 and AMS-QQ-A-250/12	
Form	Plate	
Temper	T7351	
Thickness [in]	0.250 - 0.499	
Mechanical Properties		
	[MPa]	**[ksi]**
Ftu L	468.84	68
Fty L	393.00	57
Fcy L	386.11	56
Fsu	262.00	38
Fbru (e/d=1.5)	703.27	102
Fbry (e/d=1.5)	544.69	79
E	71016.00	10300
Ftu LT	475.74	69
Fty LT	393.00	57
Fcy LT	406.79	59
Fbru (e/d=2)	903.21	131
Fbry (e/d=2)	655.00	95
Physical Properties		
	[kg/m^3]	**[lb/in^3]**
ρ	2796	0.101
ν	0.33	

Table 5-3: AL 7075 T7351 properties

NASTRAN CARD:	`MAT1 1 7.1+10 .33 2790.`
ITEMS:	Grids cover panels Debris shield brackets. Debris Shield upper connections External cables suports

Table 5-4: AL 7075 T7351 in FE model

Questo documento contiene informazioni di proprietà di CARLO GAVAZZI SPACE SpA. Tutti i diritti sono riservati.
All information contained in this document are property of CARLO GAVAZZI SPACE SpA. All right reserved.

5.5.2 AL 5083 H111

5083 Aluminium Alloy		
Source	MIL-HDBK-5H	
Specification	AMS 4056 and AMS-QQ-A-250/6	
Form	Sheet and Plate	
Temper	H111	
Basis	A	
Thickness [in] ([mm])	0.05 - 1.5 (1.27 - 38.1)	
Mechanical Properties		
	[MPa]	**[ksi]**
Ftu	275	40
Fty	125	18
Fcy	125	18
Fsu	172	25
Fbru	414	60
Fbry	221	32
E	70327	10200
Physical Properties		
	[kg/m^3]	**[lb/in^3]**
ρ	2657	0.096
ν	0.33	

Table 5-5: AL 7075 T7351 properties

NASTRAN CARD:	`MAT1 2 7.03+10 .33 2657.`
ITEMS:	External cables suports

Table 5-6: AL 7075 T7351 in FE model

Questo documento contiene informazioni di proprietà di CARLO GAVAZZI SPACE SpA. Tutti i diritti sono riservati.
All information contained in this document are property of CARLO GAVAZZI SPACE SpA. All right reserved.

5.5.3 CFRP / DEBRIS SHIELDS

CFRP / DEBRIS SHIELDS		
Source	Vendor	
Fibre	T300	
Resin	Vicotex 1454	
Form	Plain Weave fabric	
Thickness [in]	0.021 +/- 10%	
Mechanical Properties		
	[MPa]	**[ksi]**
Ftu	850	123
Fcu	700	102
Fsu	105	15
Et	75000	10878
Ec	70000	10153
Ebend	950	138
G	12000	1740
Physical Properties		
	[kg/m^3]	**[lb/in^3]**
ρ	1400	0.051
ν	0.28	

Table 5-7: CFRP properties

NASTRAN CARD:	`MAT8.....7.....7.+10...7.+10....28.....1.2+10..9.5+8...9.5+8...1400.` `.....8.5+8...7.+8....8.5+8...7.+8....1.05+8`
ITEMS:	Debris Shields

Table 5-8: CFRP / DEBRIS SHIELDS in FE model

Questo documento contiene informazioni di proprietà di CARLO GAVAZZI SPACE SpA. Tutti i diritti sono riservati.
All information contained in this document are property of CARLO GAVAZZI SPACE SpA. All right reserved.

5.5.4 HONEYCOMB

HEXCEL CR III-3/16-5056-.007-2.0		
Source	HexWeb product data	
Material	5056 Aluminium Alloy	
Form	Honeycomb	
Cell size [in]	3/16	
Nominal foil thickness [in]	0.0007	
Mechanical Properties		
	[MPa]	**[ksi]**
Fty (L direction)	0.72	0.11
Fty (W direction)	0.34	0.05
E11	0.00	0.00
E22	0.00	0.00
E33	310.26	45.00
G13	186.16	27.00
G23	89.63	13.00
G12	0.00	0.00
Physical Properties		
	[kg/m^3]	**[lb/ft^3]**
ρ	32	2

Table 5-9: Honeycomb properties

NASTRAN CARD:	`MAT9.....3.....1000.....1000.`
	`.....3.1+8`
	`.....1000.....1.86+8.....8.9+7...36.4`

ITEMS:	Debris shields

Table 5-10: Honeycomb in FE model

Questo documento contiene informazioni di proprietà di CARLO GAVAZZI SPACE SpA. Tutti i diritti sono riservati.
All information contained in this document are property of CARLO GAVAZZI SPACE SpA. All right reserved.

5.5.5 PEEK 1000

Peek 1000		
Source	Matweb	
Specification	ASTM D638 ASTM D790	
Mechanical Properties		
	[Mpa]	**[ksi]**
Ftu	110	16
Fcu	138	20
E	4344	630
G	4137	600
Physical Properties		
	[kg/m^3]	**[lb/in^3]**
ρ	1310	0.0473
ν	NA	

Table 5-11: Peek 1000 properties

NASTRAN CARD:	MAT1 6 4.34+9 4.14+9 -.4758461309. 4.68-5 293.15 1.1+8 1.38+8 5.52+7
USED ON ITEMS:	CABLE SUPPORT

Table 5-12: Peek 1000 in FE model

Questo documento contiene informazioni di proprietà di CARLO GAVAZZI SPACE SpA. Tutti i diritti sono riservati.
All information contained in this document are property of CARLO GAVAZZI SPACE SpA. All right reserved.

5.6 RICH FE MODEL IMPROVEMENT DESCRIPTION

In this chapter the added components to RD2 MODEL of RICH Finite Element Model are presented:

- GRID CLOSURE PANEL
-

Questo documento contiene informazioni di proprietà di CARLO GAVAZZI SPACE SpA. Tutti i diritti sono riservati.
All information contained in this document are property of CARLO GAVAZZI SPACE SpA. All right reserved.

CABLE MASS
- DEBRIS
- DEBRIS UPPER CONNECTION
- INTERNAL CABLE SUPPORT

5.6.1 GRID CLOSURE PANEL

The grid closure panels are shown in the following figure:

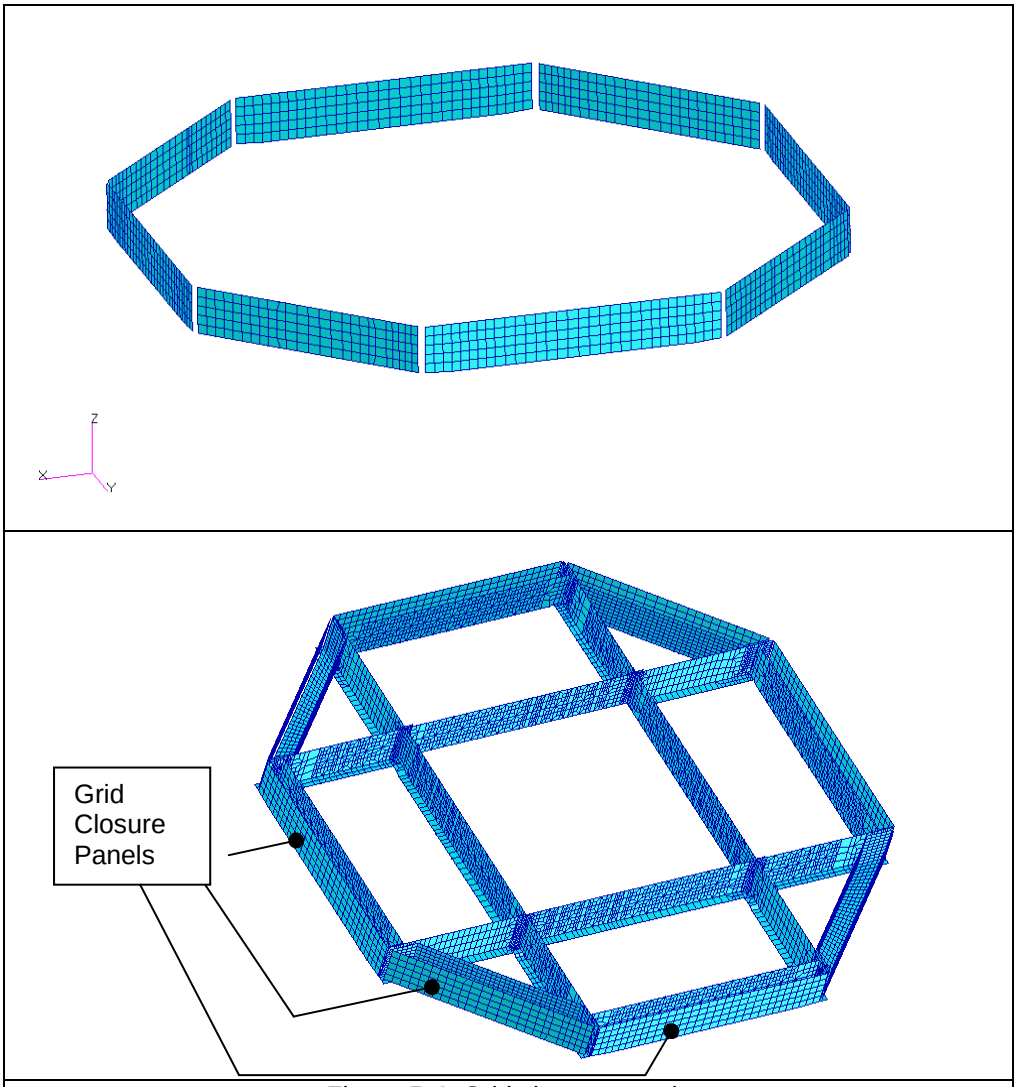

Figure 5-4: Grid closure panels

Questo documento contiene informazioni di proprietà di CARLO GAVAZZI SPACE SpA. Tutti i diritti sono riservati.
All information contained in this document are property of CARLO GAVAZZI SPACE SpA. All right reserved.

5.6.2 DEBRIS SHIELD

The debris shields of the RICH are presented in the following figure:

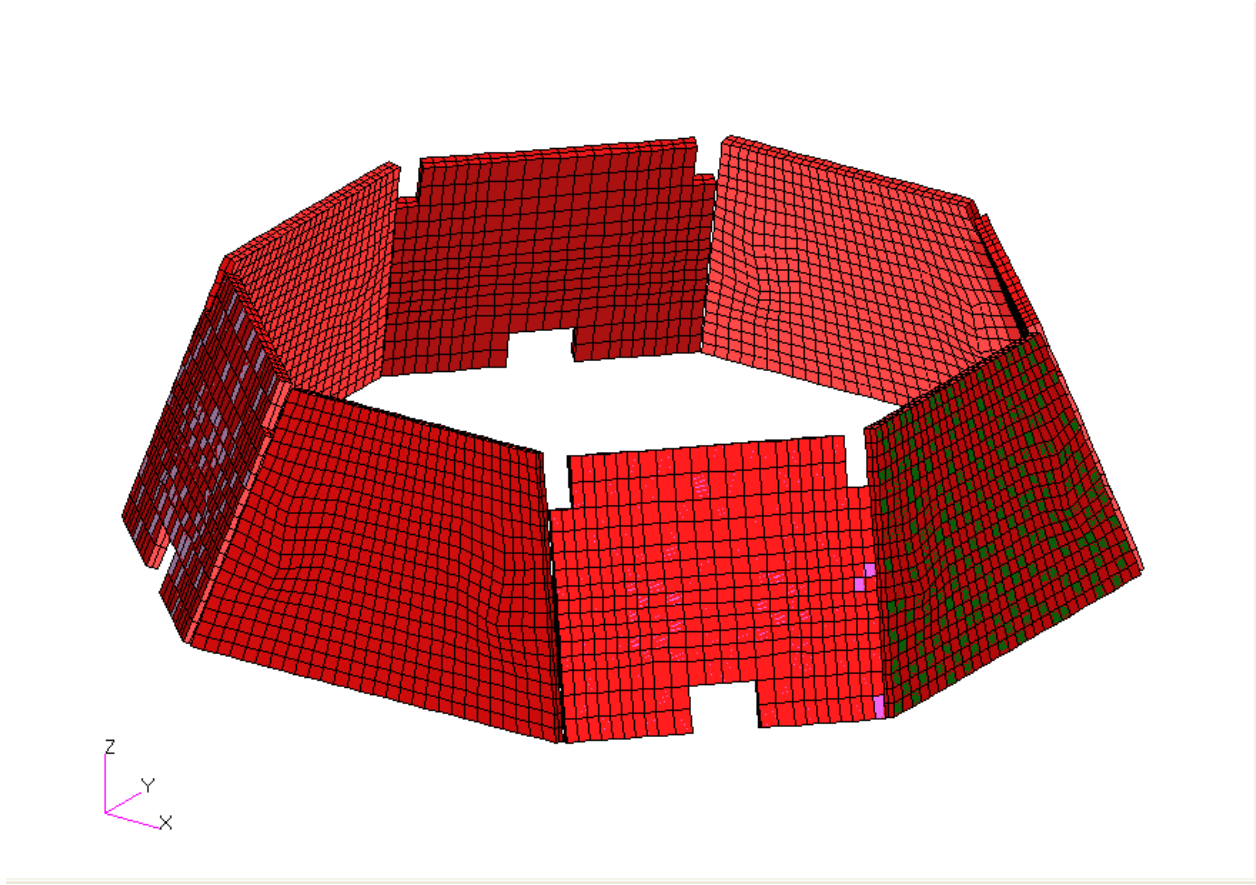

Figure 5-5: Debris Shields

Questo documento contiene informazioni di proprietà di CARLO GAVAZZI SPACE SpA. Tutti i diritti sono riservati.
All information contained in this document are property of CARLO GAVAZZI SPACE SpA. All right reserved.

5.6.3 CABLE MASS

The cable mass was 13.5 Kg. The routing is fixed to the Debris shield internal face and to the debris shield brackets. In the model the cable mass was considered as a lumped mass on the debris shield internal face.
The following figure show the position of the lumped mass.

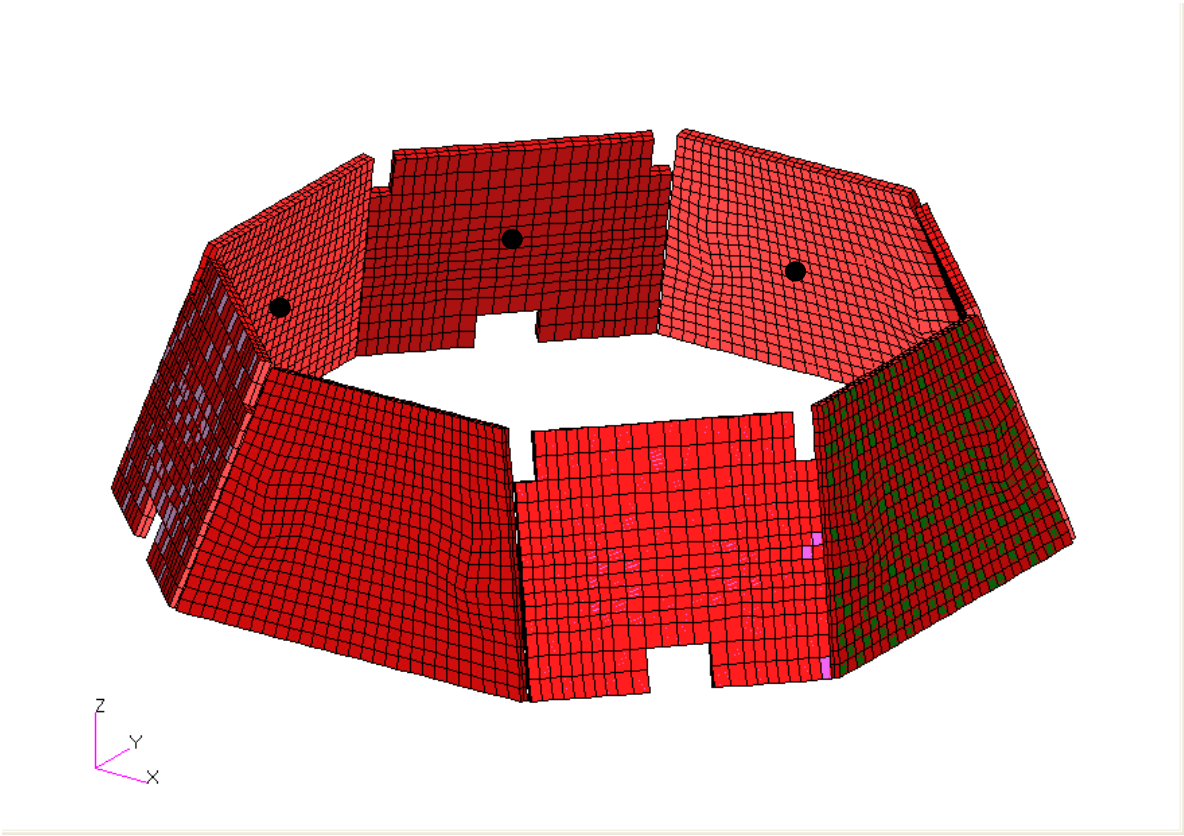

Figure 5-6:The black dots are the cable masses fixed to the internal face of Debris

Questo documento contiene informazioni di proprietà di CARLO GAVAZZI SPACE SpA. Tutti i diritti sono riservati.
All information contained in this document are property of CARLO GAVAZZI SPACE SpA. All right reserved.

5.6.4 DEBRIS BRACKETS

One of the debris shields brackets of the RICH is presented in the following figure:

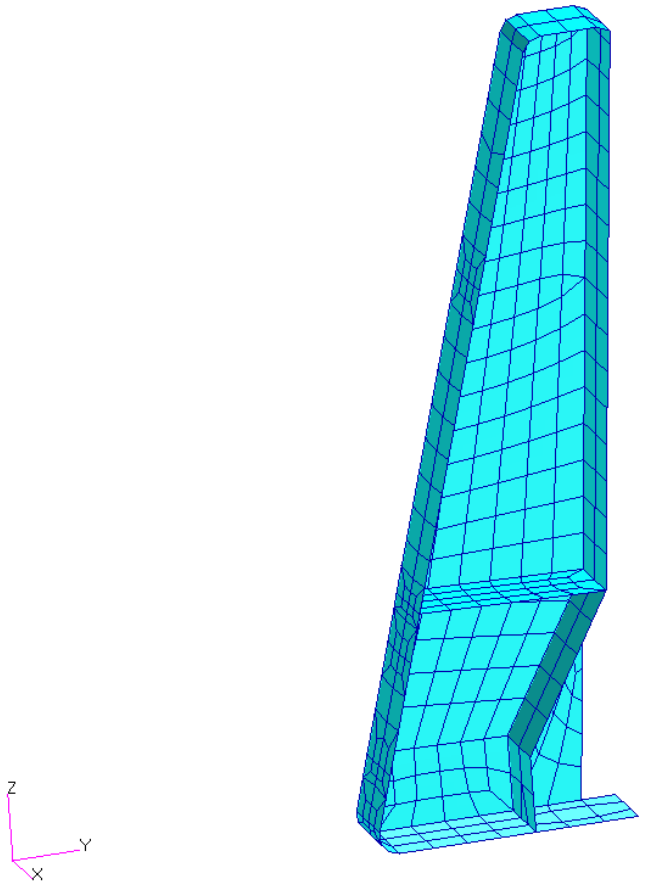

Figure 5-7: Debris Shields Brackets

Questo documento contiene informazioni di proprietà di CARLO GAVAZZI SPACE SpA. Tutti i diritti sono riservati.
All information contained in this document are property of CARLO GAVAZZI SPACE SpA. All right reserved.

5.6.5 DEBRIS UPPER CONNECTION

The debris upper connections are necessary to connect each other the debris shield upper corners, as shown in the following figure.

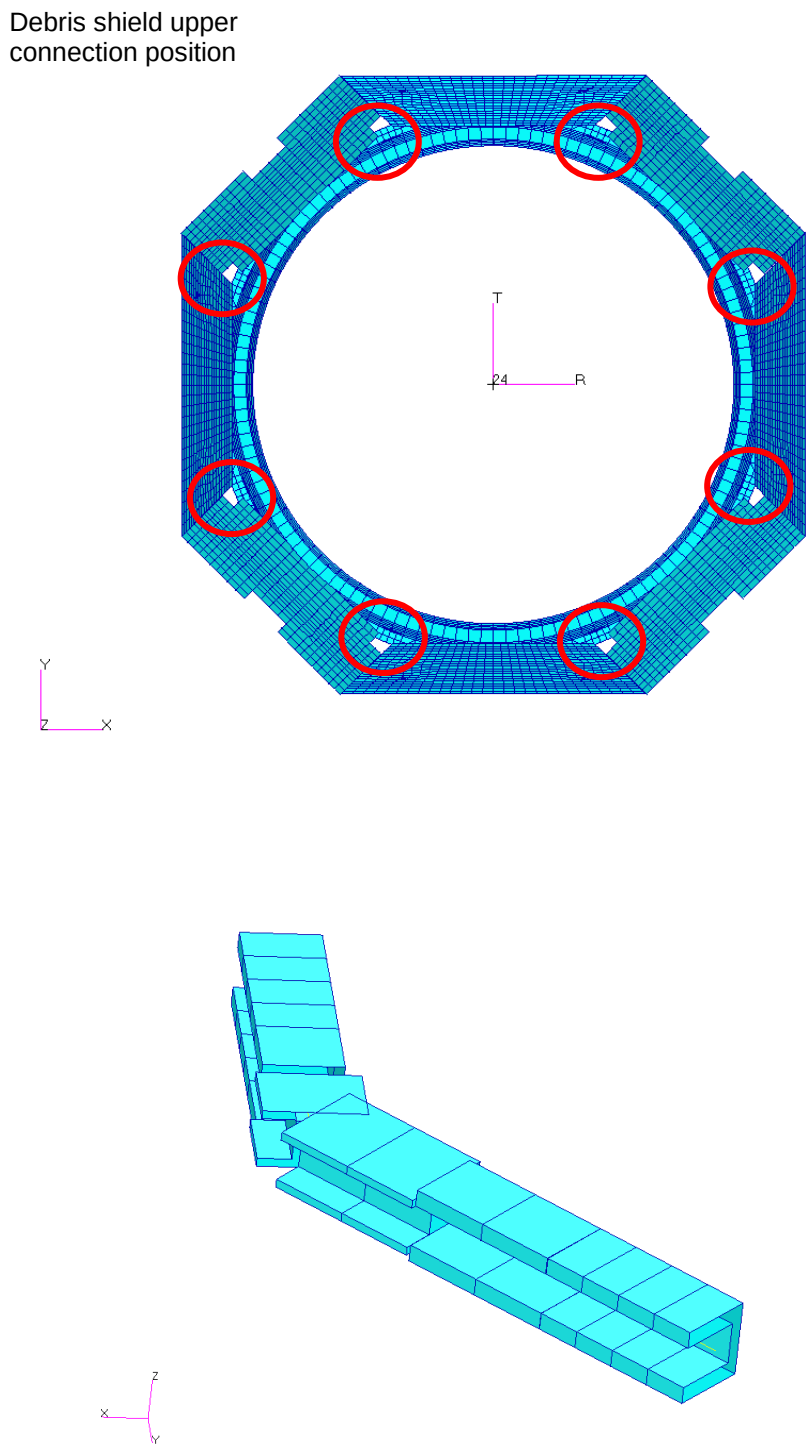

Figure 5-8: Debris Shields upper connection

Questo documento contiene informazioni di proprietà di CARLO GAVAZZI SPACE SpA. Tutti i diritti sono riservati.
All information contained in this document are property of CARLO GAVAZZI SPACE SpA. All right reserved.

5.6.6 INTERNAL CABLE SUPPORT

For the verification the worst cable support has been considered. The total cable mass has been divided on each supports and using this approach a distributed mass of 0.675 Kg has been superimposed on this cable support. The following figure shows the cable support Finite Element Model.

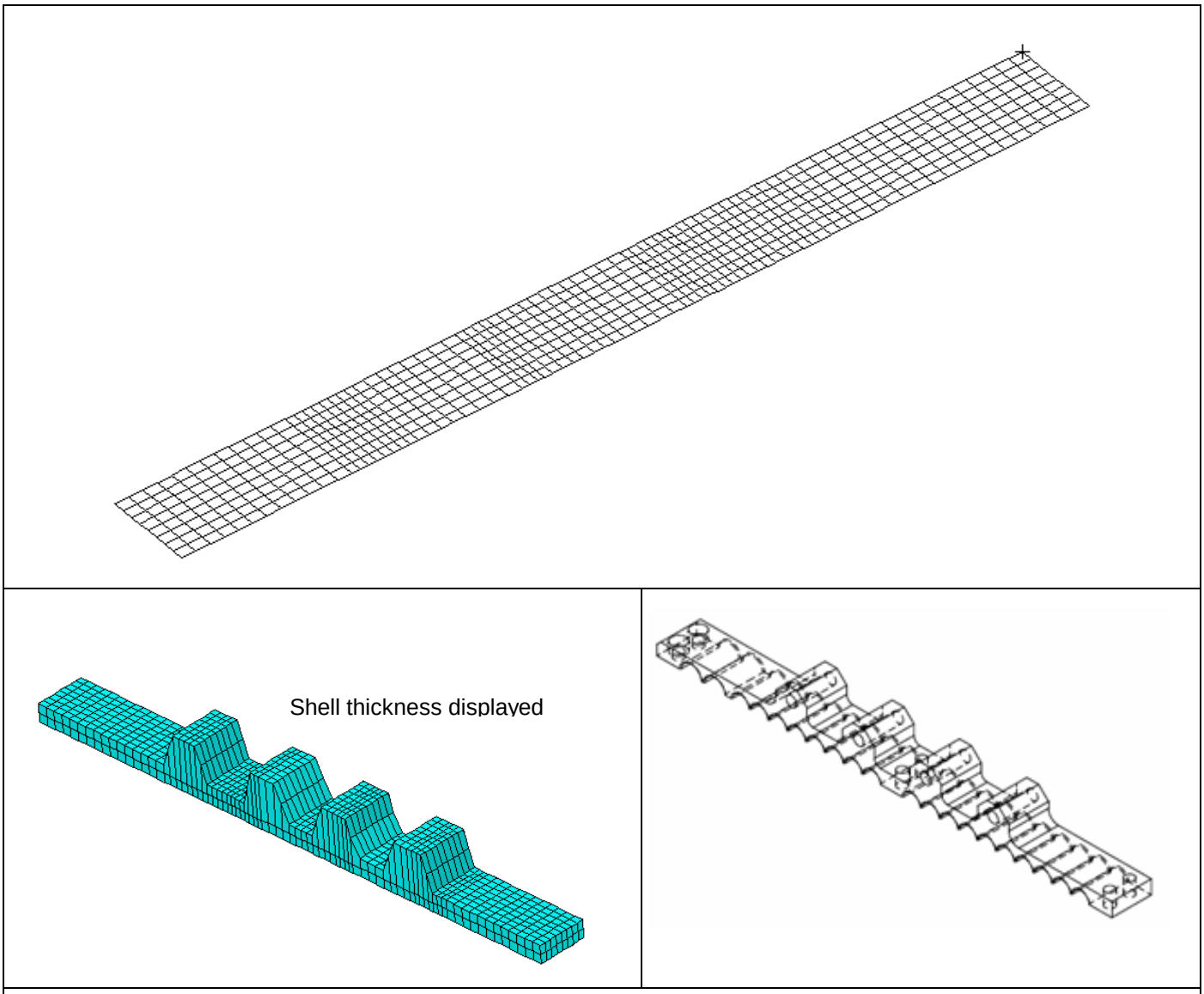

Figure 5-9: RICH cable support

Questo documento contiene informazioni di proprietà di CARLO GAVAZZI SPACE SpA. Tutti i diritti sono riservati.
All information contained in this document are property of CARLO GAVAZZI SPACE SpA. All right reserved.

5.6.7 EXTERNAL CABLE SUPPORTS

For both the external cable supports the cable mass has been considered using lumped masses attached to the brackets.
The following figures show the cable supports Finite Element Model.

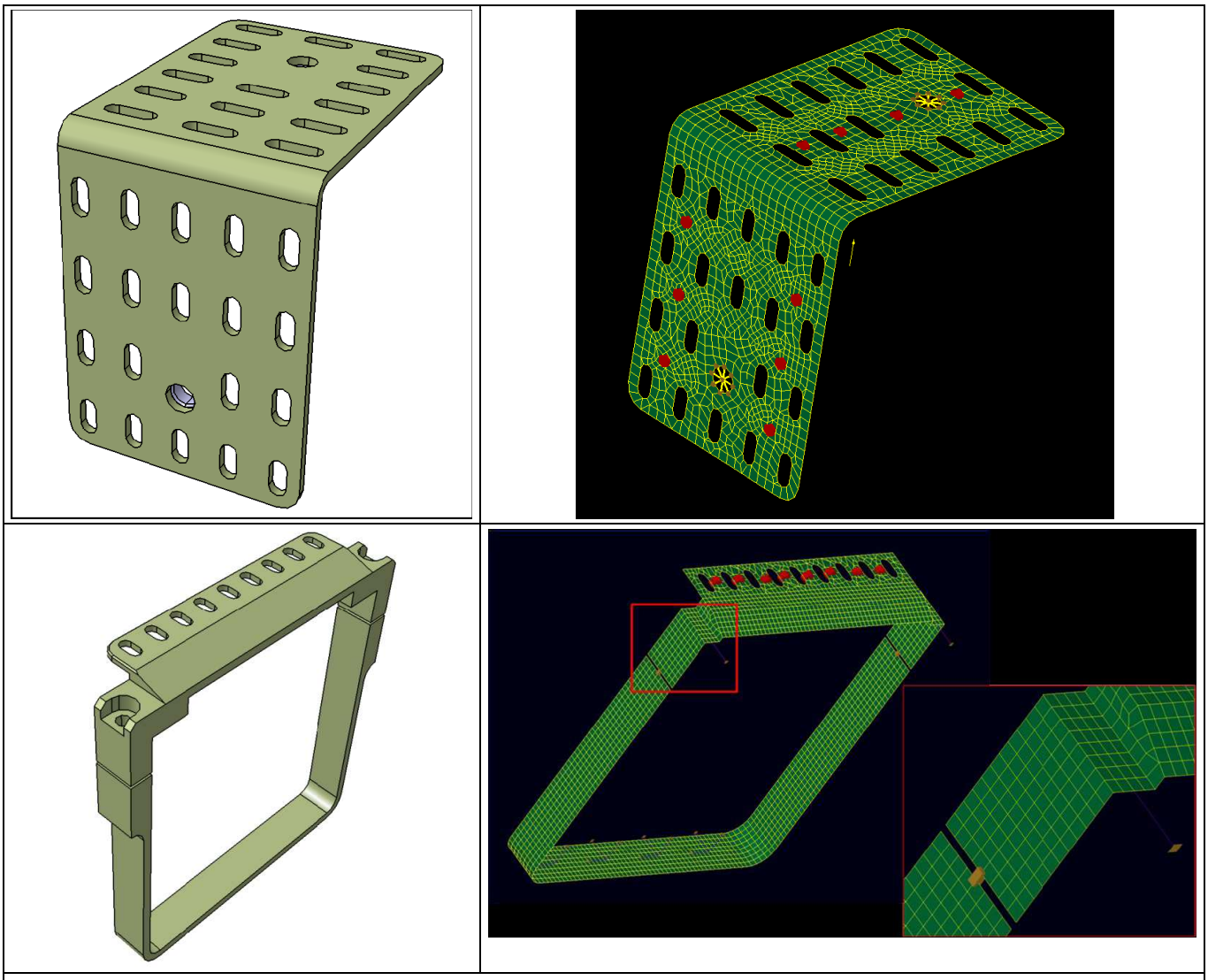

Figure 5-10: RICH external cable supports

The red spots attached to the meshing are the lumped masses associated to the RICH HV cable bundles; in particular the considered total cable mass is 1.13 Kg.

Questo documento contiene informazioni di proprietà di CARLO GAVAZZI SPACE SpA. Tutti i diritti sono riservati.
All information contained in this document are property of CARLO GAVAZZI SPACE SpA. All right reserved.

5.7 MODEL BOUNDARY CONDITIONS

The RICH external structure is connected to the USS through 16 bolts. In the Finite Element Model it is simulated by 16 SPC (with the three translation constrained) directly positioned on the structure.

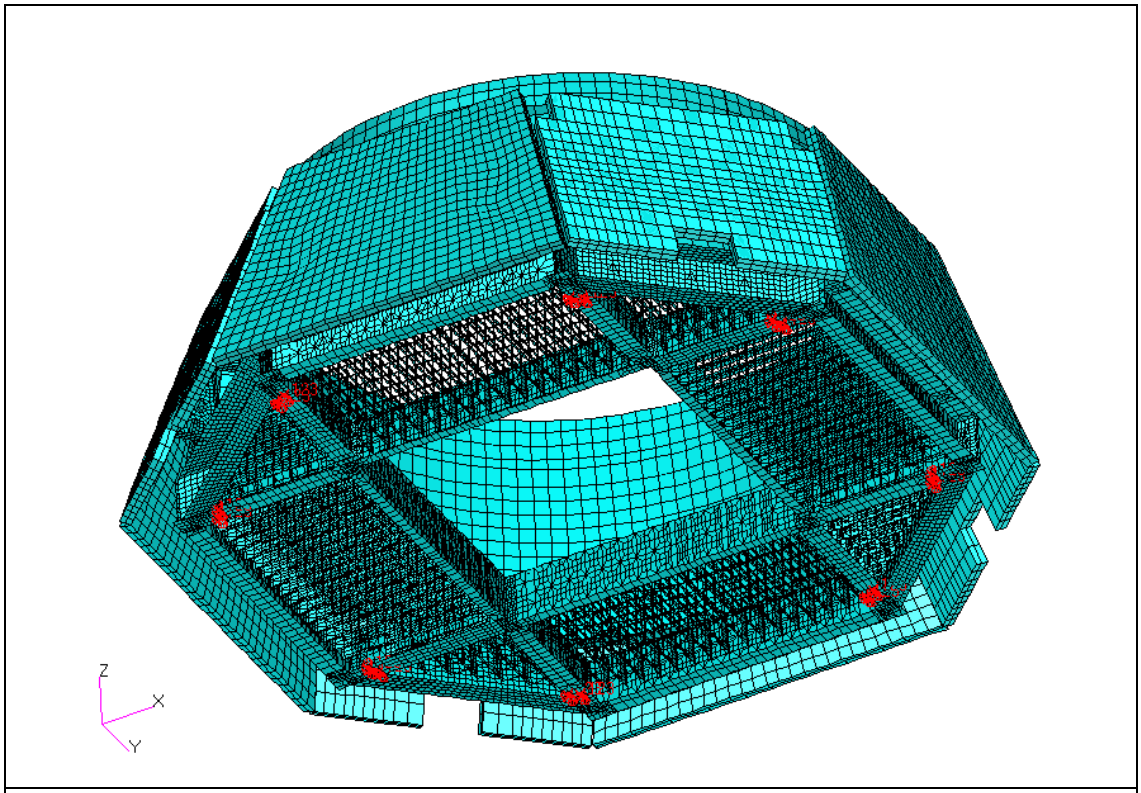

Figure 5-11: Model boundary conditions

The internal cable support is connected to the DS support bracket by four bolts that go through it transversally. For this reason in the cable support Finite Element Model it is simulated by 36 SPC with the six d.o.f. constrained aligned on four lines directly positioned on the structure.

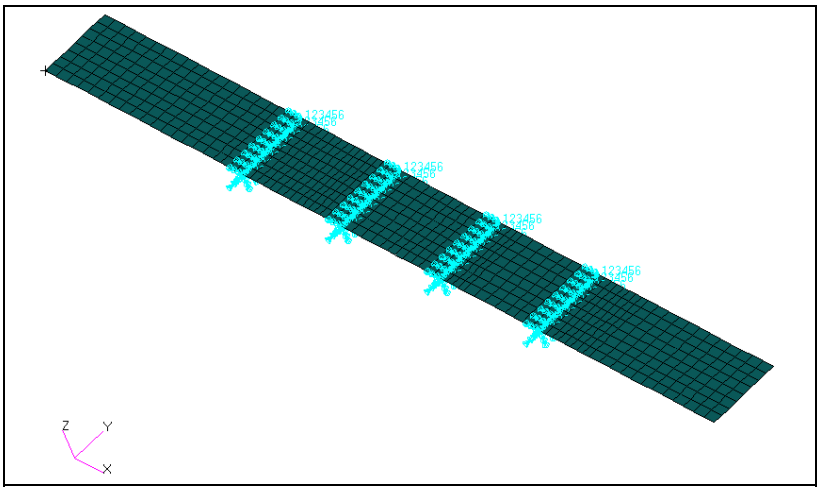

Figure 5-12: Cable support model boundary conditions

Questo documento contiene informazioni di proprietà di CARLO GAVAZZI SPACE SpA. Tutti i diritti sono riservati.
All information contained in this document are property of CARLO GAVAZZI SPACE SpA. All right reserved.

The external cable support are connected to the LUSS, in two different way.
The P/N 047003403 bracket is fixed to the LUSS beams by 2 Bolts NAS1351N3-8 (Mat.: stainless steel A286).

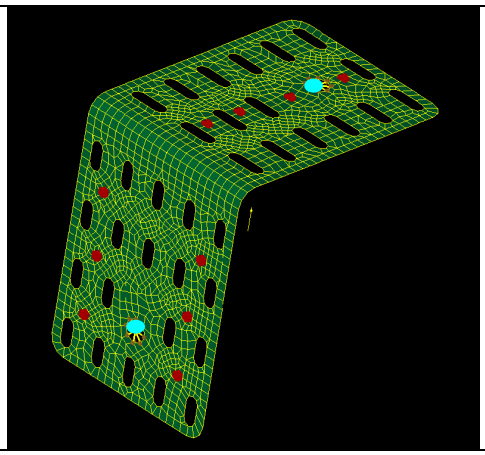

Figure 5-13 External cable support boundary conditions

The P/N 047003404 is clamped around the LUSS beams by 2 M3 bolts (Mat.: stainless steel A4). Jaw system.

Questo documento contiene informazioni di proprietà di CARLO GAVAZZI SPACE SpA. Tutti i diritti sono riservati.
All information contained in this document are property of CARLO GAVAZZI SPACE SpA. All right reserved.

5.8 MODEL MASS BUDGET

The model mass budget is shown in the following table.

RICH MASS BUDGET	ITEM	CAD MASS [Kg]	FEM MASS [Kg]	REMARKS
EXTERNAL STRUCTURE	MAIN STRUCTURE PARTS	20.8	45.6	
	DEBRIS SHIELD & BKTs & Up. Conn.	9.1	9.1	
	OCTAGON COVER PANELS	1.5	1.5	
	LOWER PANEL & LIGHT SEALING	3.3	3.3	
	BOLTS & NUTS	6.2		Added on the main structure parts
	FIXATION TO USS	0.3		
	ELECTRONICS	4.5		
	CABLES & CONNECTORS	13.8		
	TOTAL	**59.6**	**59.5**	
INTERNAL STRUCTURE	STRUCTURE PARTS	56.5	58.7	
	PMT ASSEMBLY	53.3	53.3	
	CABLE & CONNECTORS	2.1		Added on the structure parts
	TOTAL	**112.0**	**112.0**	
REFLECTOR	MIRROR ASSEMBLY	8.4	8.4	
	TOTAL	**8.4**	**8.4**	
	TOTAL	**179.9**	**179.9**	

Table 5-13 Mass budget of updated RICH SYSTEM FE model

Questo documento contiene informazioni di proprietà di CARLO GAVAZZI SPACE SpA. Tutti i diritti sono riservati.
All information contained in this document are property of CARLO GAVAZZI SPACE SpA. All right reserved.

5.9 DIMENSIONING LOADS

The dimensioning loads are based on the results of the CLA performed by LMSO (and provided by the mail "RICH to USS-02 Interface Forces and Displacements 2-042.xls"), using the FEM Model of the entire AMS-02. The Dimensioning Loads used (series 1000, 2000 and 4000) are composed by both inertial loads and enforced displacement of the constraints. In the following table the set of the load cases used for the analysis is presented: in the first table the entire set is showed with the inertial loads applied; in the second table the enforced displacements of load case 4001 are presented.

Load Case	Nx (g)	Ny (g)	Nz (g)	Rx (rad/sec^2)	Ry (rad/sec^2)	Rz (rad/sec^2)
1001-1064	+3.7	+1.4	+1.4	+4.5	+8.4	+3.9
	-0.4	-1.6	-1.5	-4.1	-11.0	-4.1
2001-2064	+1.2	+0.7	+2.1	+5.2	+10.7	+6.0
	-1.3	-0.6	-5.6	-4.7	-13.9	-4.8
4001-4064	+1.7	+1.1	+2.7	+12.5	+14.7	+12.1
	-2.0	-1.1	-7.4	-11.1	-18.1	-10.0

Table 5-14: Applied set of load cases

Sets 1000 and 2000 are applied in AMS-02 center of gravity in launch configuration.
Set 4000 is applied in AMS-02 Center of gravity in landing configuration (with empty tank)

LOAD CASE 4001 DISPLACEMENTS						
GRID	Tx [m]	Ty [m]	Tz [m]	Tx [in]	Ty [in]	Tz [in]
985591	0.0035	0.0017	0.0011	1.37E-04	6.54E-05	4.49E-05
985697	0.0035	0.0017	0.0011	1.36E-04	6.61E-05	4.45E-05
156082	0.0034	0.0020	0.0019	1.34E-04	7.87E-05	7.60E-05
155446	0.0034	0.0020	0.0020	1.34E-04	7.91E-05	7.68E-05
156173	0.0036	0.0021	0.0022	1.42E-04	8.31E-05	8.70E-05
156280	0.0037	0.0021	0.0022	1.44E-04	8.39E-05	8.82E-05
998097	0.0050	0.0022	0.0030	1.96E-04	8.58E-05	1.20E-04
997661	0.0050	0.0022	0.0031	1.97E-04	8.50E-05	1.20E-04
998180	0.0052	0.0020	0.0029	2.06E-04	8.03E-05	1.16E-04
998286	0.0052	0.0020	0.0029	2.06E-04	7.99E-05	1.15E-04
1010653	0.0053	0.0017	0.0023	2.07E-04	6.65E-05	9.21E-05
1010054	0.0052	0.0017	0.0023	2.06E-04	6.57E-05	9.02E-05
1010736	0.0050	0.0014	0.0015	1.96E-04	5.67E-05	5.94E-05
1010842	0.0050	0.0014	0.0015	1.95E-04	5.59E-05	5.71E-05
985508	0.0038	0.0014	0.0011	1.50E-04	5.43E-05	4.25E-05
984909	0.0038	0.0014	0.0011	1.49E-04	5.47E-05	4.29E-05

Table 5-15: Load case 4001 displacements

Questo documento contiene informazioni di proprietà di CARLO GAVAZZI SPACE SpA. Tutti i diritti sono riservati.
All information contained in this document are property of CARLO GAVAZZI SPACE SpA. All right reserved.

The dimensioning loads used to verify the cable supports (both internal and external) are different from the load used for the RICH since having a stand alone structure the mechanical load environment of the AMS secondary structures with a mass less than 227 kg (for launch, on-orbit etc) has been considered (AD1). These load factors are to be applied in any axis with a load factor of 25% of the primary load in the orthogonal directions.
The limit loads with respect to the structure mass are listed in table

Weight [kg]	Limit Load Factor LLF [g]
< 9	40
9-23	31
23-45	22
45-91	17
91-227	13

Table 5-16: Design Limit Load Factors for small secondary structures

The following table summarizes this combined load cases:

Questo documento contiene informazioni di proprietà di CARLO GAVAZZI SPACE SpA. Tutti i diritti sono riservati.
All information contained in this document are property of CARLO GAVAZZI SPACE SpA. All right reserved.

Load Case	X DIRECTION [g]	Y DIRECTION [g]	Z DIRECTION [g]
5001	+40	+10	+10
5002	+40	+10	-10
5003	+40	-10	+10
5004	+40	-10	-10
5005	-40	+10	+10
5006	-40	+10	-10
5007	-40	-10	+10
5008	-40	-10	-10
5009	+10	+40	+10
5010	+10	+40	-10
5011	+10	-40	+10
5012	+10	-40	-10
5013	-10	+40	+10
5014	-10	+40	-10
5015	-10	-40	+10
5016	-10	-40	-10
5017	+10	+10	+40
5018	+10	+10	-40
5019	+10	-10	+40
5020	+10	-10	-40
5021	-10	+10	+40
5022	-10	+10	-40
5023	-10	-10	+40
5024	-10	-10	-40

Table 5-17: Inertial loads for RICH cable support verification both internal and external

Questo documento contiene informazioni di proprietà di CARLO GAVAZZI SPACE SpA. Tutti i diritti sono riservati.
All information contained in this document are property of CARLO GAVAZZI SPACE SpA. All right reserved.

5.10 DIMENSIONING RULES

5.10.1 SAFETY FACTORS

The RICH system has to show positive MoS applying the following SF:

SAFETY FACTORS	Yield	Ultimate
Metallic structures	1.25	2.0
Non metallic structures	NA	2.0
Joint separation	1.2	NA
Joints fitting factor	1.15	1.15

Table 5-18: Safety Factors for structure

5.10.2 TEMPERATURE DERATING FACTOR

For all the material the temperature degradation factor is considered, as per RD8 at 60℃ (140℉) (lan ding temperature) the worst temperature degradation factor for the material is 6% with respect to the material nominal mechanical characteristics. This temperature degradation factor is applied to all the material.

5.10.3 MARGINS OF SAFETY FOR STRUCTURE

The MoS is defined as:

$$MoS_Y = \frac{\sigma_y}{SF_Y \cdot \sigma_{Load}} - 1.0$$ for the yield strength, and

$$MoS_U = \frac{\sigma_u}{SF_U \cdot \sigma_{Load}} - 1.0$$ for the ultimate strength, where:

- σ_Y the yield strength of the material,
- σ_U the ultimate strength of the material,
- SF_Y the safety factor for yield strength,
- SF_U the safety factor for ultimate strength,
- σ_{Load} the maximum Von Mises equivalent stress due to external loads.

The MoS for stresses indicates the amount by which the allowable stress, defined by the material characteristics, exceeds the actual stress due to the applied loads, taking into account the applicable SF, defined in Chapter 5.10.1 .

It is required that MoS are positive for all load cases, for all structural elements.
Additional MoS can be defined to evaluate margins for generic results.

$$\mathrm{MoS} = \frac{\mathrm{A}}{\mathrm{SF} \cdot \mathrm{B}} - 1.0$$

- A allowable
- B actual value
- SF applicable safety factor

It is required that Margins of Safety are positive for all load cases and operative conditions, for all elements.

Questo documento contiene informazioni di proprietà di CARLO GAVAZZI SPACE SpA. Tutti i diritti sono riservati.
All information contained in this document are property of CARLO GAVAZZI SPACE SpA. All right reserved.

5.11 MARGINS OF SAFETY FOR COMPOSITE (CFRP)

The MoS is defined as:

$$MoS_u = \frac{1}{SF_u \cdot fl} - 1.0$$

fl = failure index

5.12 FAILURE INDEX CALCULATION FOR COMPOSITE (CFRP)

For the reflector, TSAI WU verification for composite materials is used:

TSAI WU Failure Index: $$fi = F_{11}\sigma_1^2 + F_{22}\sigma_2^2 - F_{12}(\sigma_1\sigma_2) + F_{66}\tau_{12}^2 + F_1\sigma_1 + F_2\sigma_2$$

Where:

$$\begin{cases} F_1 = \left(\frac{1}{f_T}\right) - \left(\frac{1}{f_C}\right) \\ F_2 = \left(\frac{1}{f_T}\right) - \left(\frac{1}{f_C}\right) \\ F_{11} = \frac{1}{(f_T \cdot f_C)} \\ F_{22} = \frac{1}{(f_T \cdot f_C)} \\ F_{66} = \frac{1}{f_s^{\,2}} \\ F_{12} = -0.5\sqrt{F_{11} \cdot F_{22}} \end{cases}$$

5.13 HONEYCOMB VERIFICATION

For the honeycomb panels the following verifications are performed:

- Combined load strength
- Intracell buckling
- Wrinkling

These verifications are performed in according to chapter 12 of the RD7

Questo documento contiene informazioni di proprietà di CARLO GAVAZZI SPACE SpA. Tutti i diritti sono riservati.
All information contained in this document are property of CARLO GAVAZZI SPACE SpA. All right reserved.

5.14 DYNAMIC ANALYSIS

In this section, results in terms of frequencies, mode shapes and effective masses are included.

5.14.1 EIGENFREQUENCIES AND MODE SHAPES

In the following table the first mode (that have an associated mass lower that the 1%) and all the ones with associated mass greater than 1% of the constrained RICH system are shown.

MODE	FREQ [Hz]	% EFF. MASS		
		X DIRECTION	Y DIRECTION	Z DIRECTION
1	46	< 1%	< 1%	< 1%
10	105	< 1%	< 1%	26.69%
16	128	< 1%	20.62%	< 1%
19	134	21.05%	< 1%	< 1%
57	170	9.30%	< 1%	< 1%
69	189	13.50%	< 1%	< 1%
70	190	< 1%	24.19%	< 1%
90	224	< 1%	< 1%	22.51%
91	230	< 1%	1.62%	5.74%
96	234	< 1%	1.30%	5.24%
107	250	< 1%	11.90%	< 1%
110	252	7.73%	1.30%	< 1%
111	253	6.72%	1.04%	< 1%

Table 5-19: RICH system natural frequencies

In the following figures the shapes of the first mode (reflector mode) and the ones with the higher effective mass for each direction are presented:

Questo documento contiene informazioni di proprietà di CARLO GAVAZZI SPACE SpA. Tutti i diritti sono riservati.
All information contained in this document are property of CARLO GAVAZZI SPACE SpA. All right reserved.

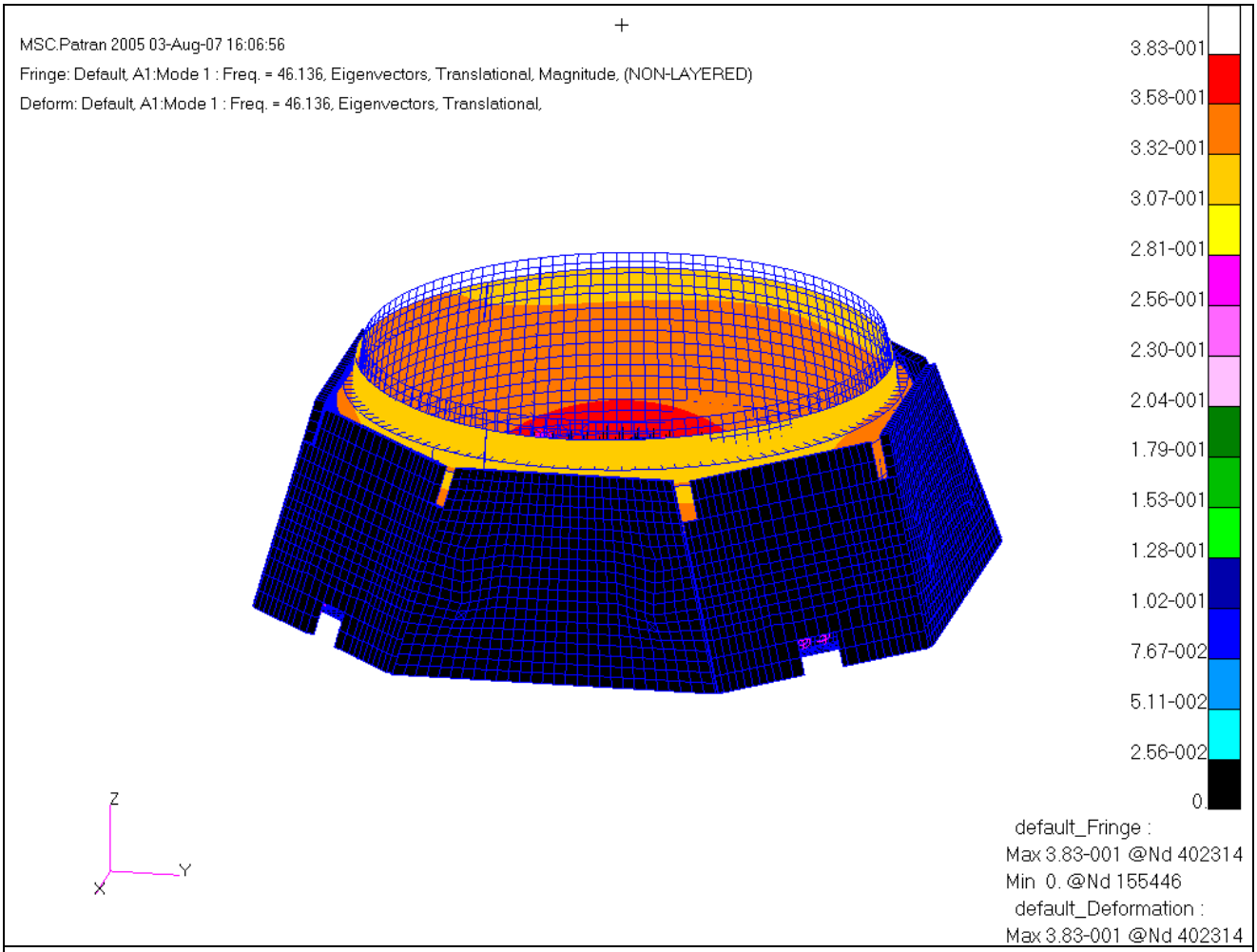

Figure 5-14: mode 1 at 46 Hz

Questo documento contiene informazioni di proprietà di CARLO GAVAZZI SPACE SpA. Tutti i diritti sono riservati.
All information contained in this document are property of CARLO GAVAZZI SPACE SpA. All right reserved.

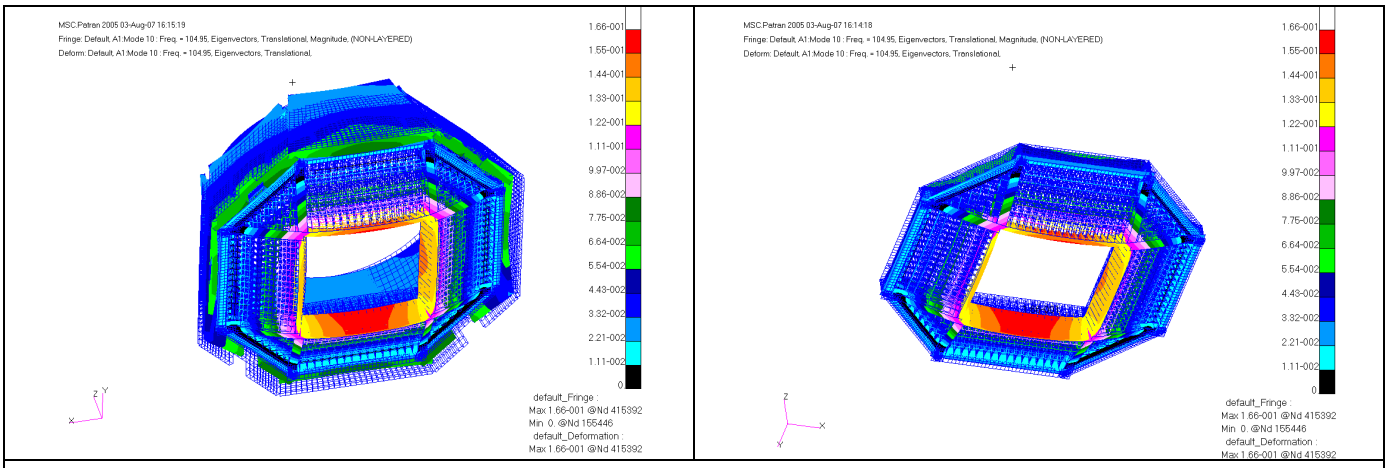

Figure 5-15: mode 10 at 105 Hz

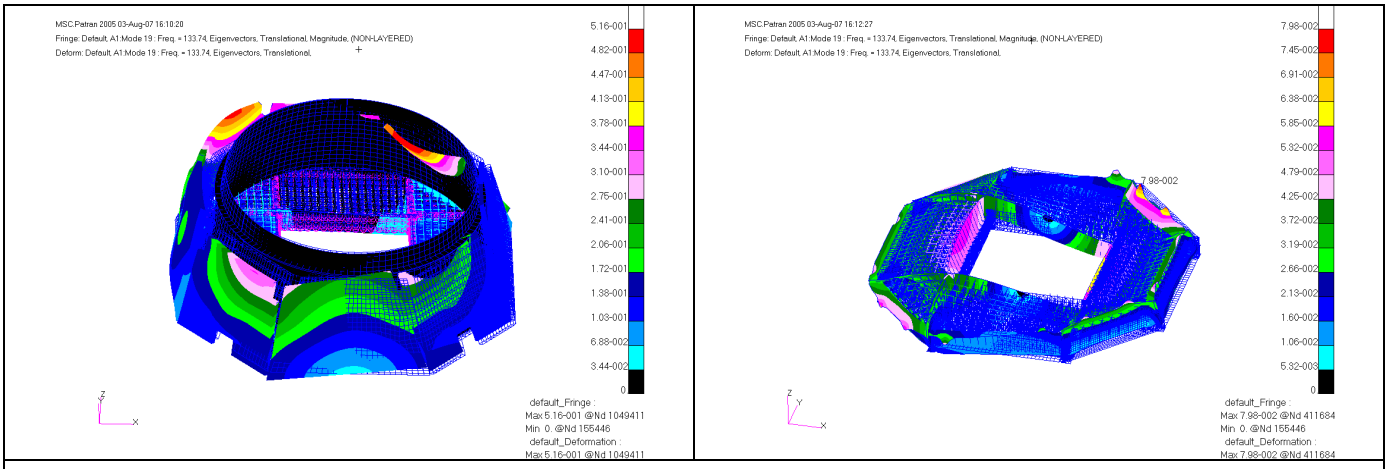

Figure 5-16: mode 19 at 134 Hz

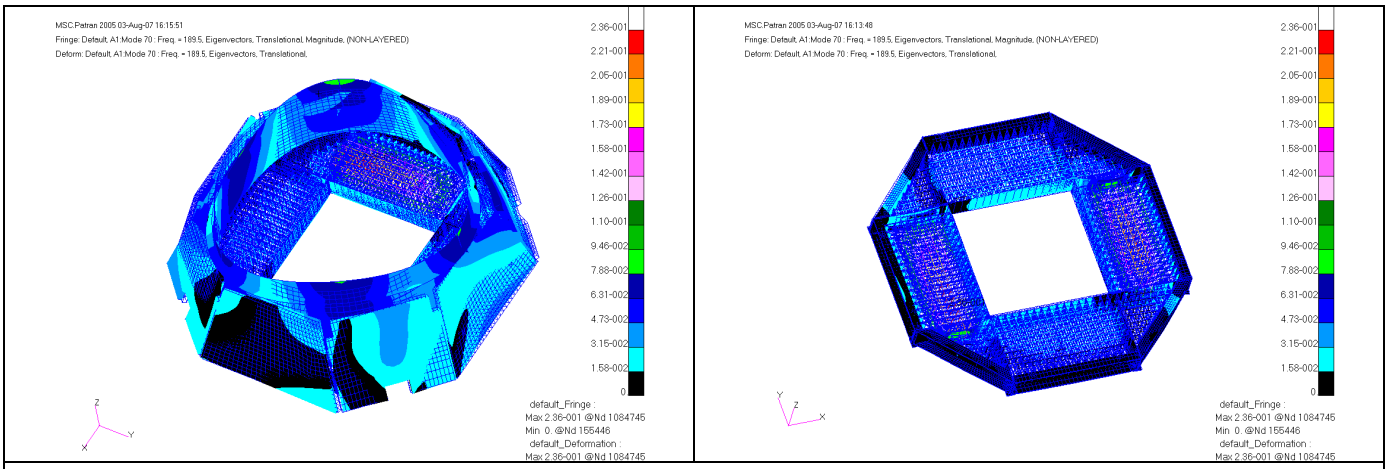

Figure 5-17: mode 70 at 190 Hz

Questo documento contiene informazioni di proprietà di CARLO GAVAZZI SPACE SpA. Tutti i diritti sono riservati.
All information contained in this document are property of CARLO GAVAZZI SPACE SpA. All right reserved.

5.14.2 EFFECTIVE MASS

Effective masses are reported; in the figures only for the spectrum from 0 to 300Hz are showed:

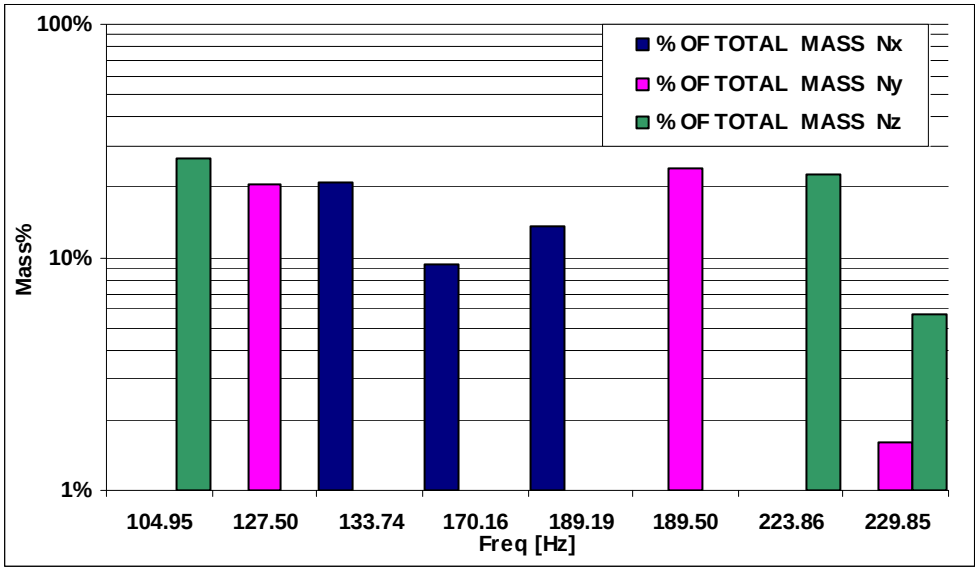

Figure 5-18: Effective masses for all axes

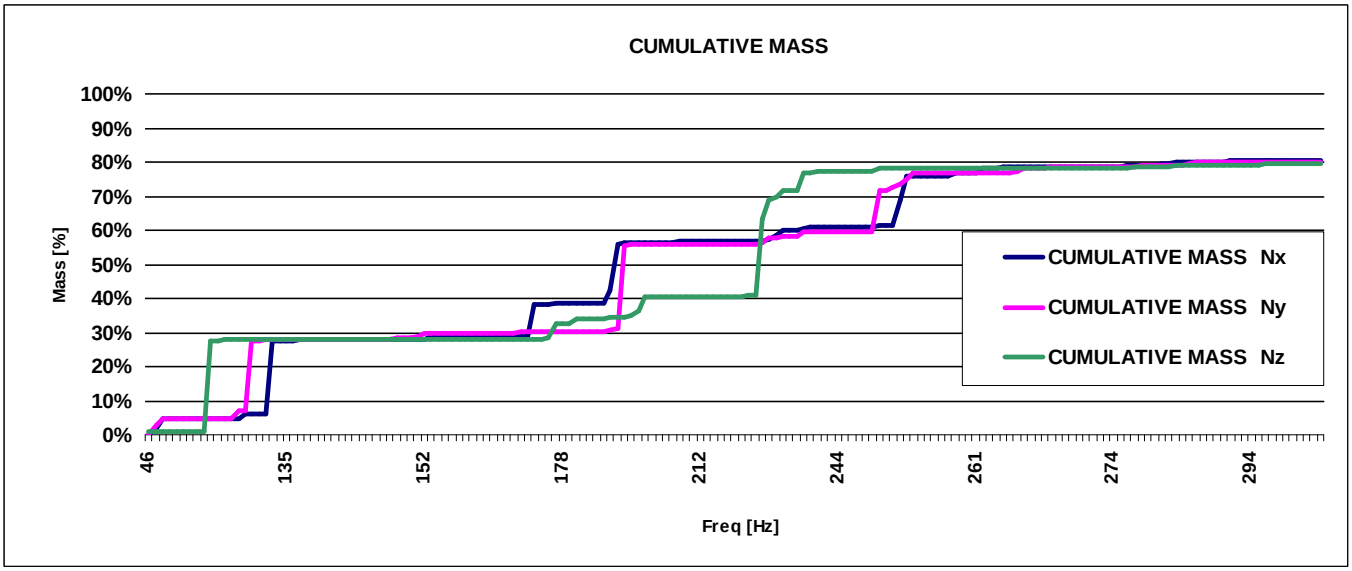

Figure 5-19: Cumulative effective masses for all axes

Questo documento contiene informazioni di proprietà di CARLO GAVAZZI SPACE SpA. Tutti i diritti sono riservati.
All information contained in this document are property of CARLO GAVAZZI SPACE SpA. All right reserved.

5.15 STATIC ANALYSIS

In the following sections, static analysis results are described for nominal configuration.

Two different types of analyses and evaluations are performed:

- 5.15.1 STRESS ANALYSIS
- 5.16 JOINT ANALYSIS

5.15.1 STRESS ANALYSIS

For the new elements described in the chapter 5.6 the stress contour and MoS calculation is shown in the next pages.
The structure is divided in the following items:

5.15.1.1 EXTERNAL STRUCTURE (the grid closure panel are installed on the external structure)
5.15.1.2 DEBRIS SHIELD
5.15.1.3 DEBRIS BRACKETS
5.15.1.4 DEBRIS UPPER CONNECTIONS
5.15.1.5 INTERNAL CABLE SUPPORTS
5.15.1.6 EXTERNAL CABLE SUPPORTS

Summary of stress analysis results are shown in 5.15.2 (MARGINS OF SAFETY).

Questo documento contiene informazioni di proprietà di CARLO GAVAZZI SPACE SpA. Tutti i diritti sono riservati.
All information contained in this document are property of CARLO GAVAZZI SPACE SpA. All right reserved.

5.15.1.1 EXTERNAL STRUCTURE

The worst condition is for **ELM 428411** for **Load Case 1003** at **Layer Z1.**
The resulting Von Mises stress is: **f_{VM} = 91 MPa**.
Following figure shows stress distribution for this subcase.

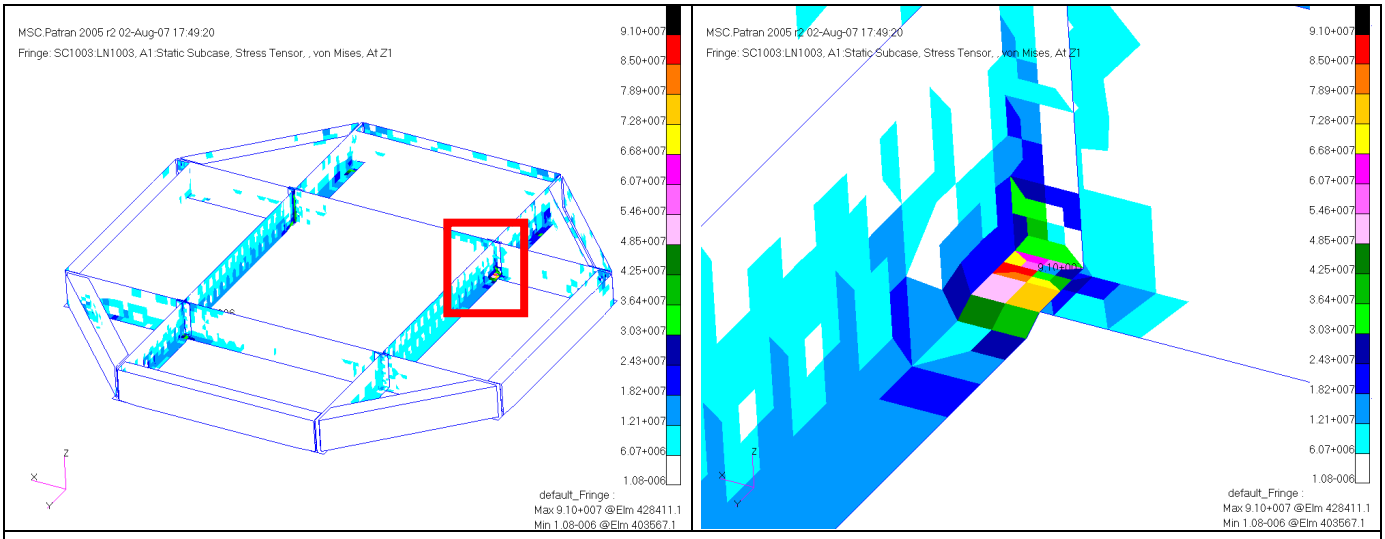

Figure 5-20: External structure, Load Case 1003, Layer Z1

Questo documento contiene informazioni di proprietà di CARLO GAVAZZI SPACE SpA. Tutti i diritti sono riservati.
All information contained in this document are property of CARLO GAVAZZI SPACE SpA. All right reserved.

5.15.1.2 DEBRIS SHIELD

5.15.1.2.1 CFRP

The worst condition is for **ELEMENT 466207** for **Load Case 1007**.
The resulting stress is: **fi = 0.0034**.
Following figure shows failure index distribution for this subcase.

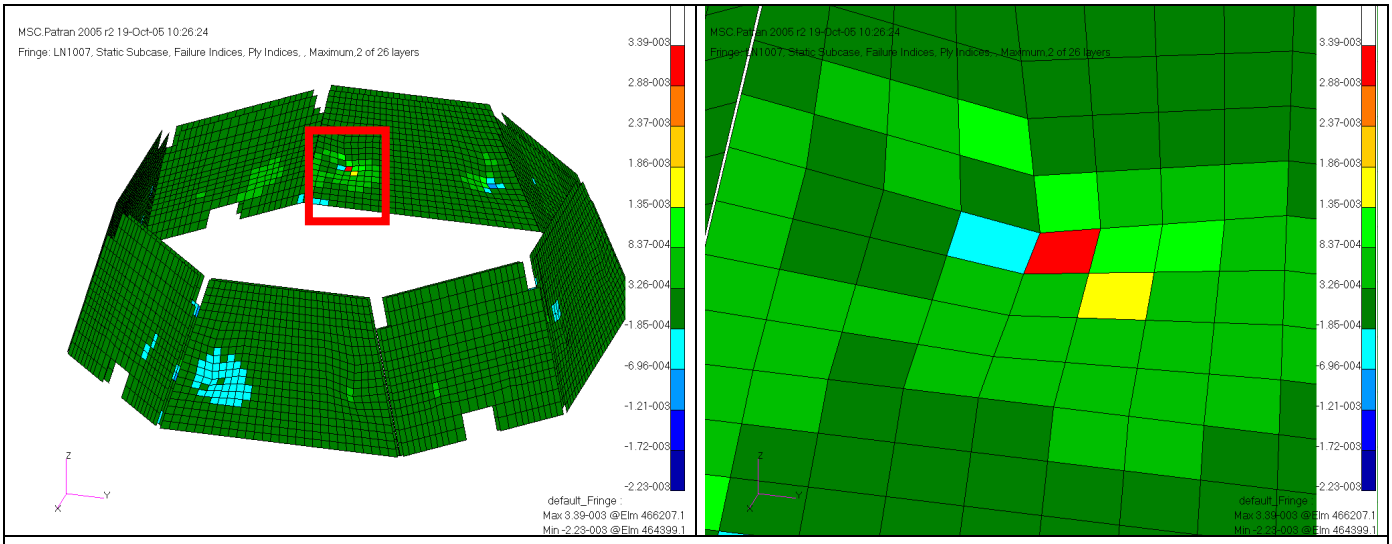

Figure 5-21: DEBRIS SHIELD CFRP PLY Load Case 1007

5.15.1.2.2 HONEYCOMB

The worst condition is for **ELEMENT 472400** for **Load Case 1032**.
Following figure shows stress distribution for this subcase.

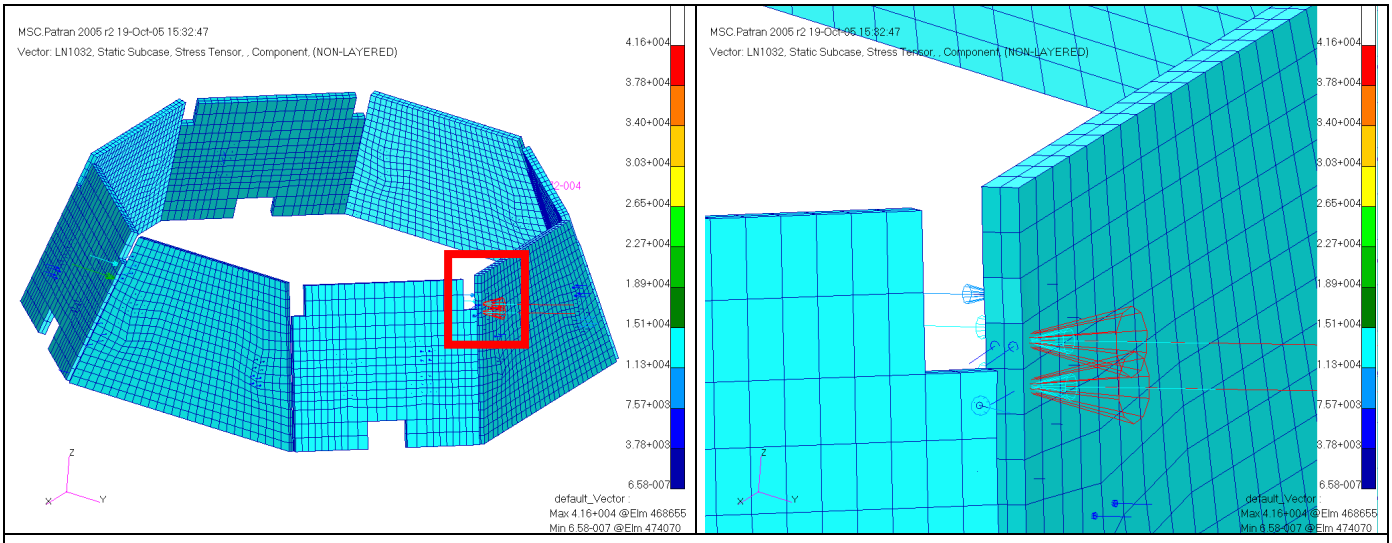

Figure 5-22: HONEYCOMB Load Case 1032

Questo documento contiene informazioni di proprietà di CARLO GAVAZZI SPACE SpA. Tutti i diritti sono riservati.
All information contained in this document are property of CARLO GAVAZZI SPACE SpA. All right reserved.

5.15.1.3 DEBRIS BRACKETS

The worst condition is for **ELEMENT 2034300** for **Load Case 4058** at **Layer Z1.**
The resulting stress is: **f_{VM} = 49.3 MPa**.
Following figure shows stress distribution for this subcase.

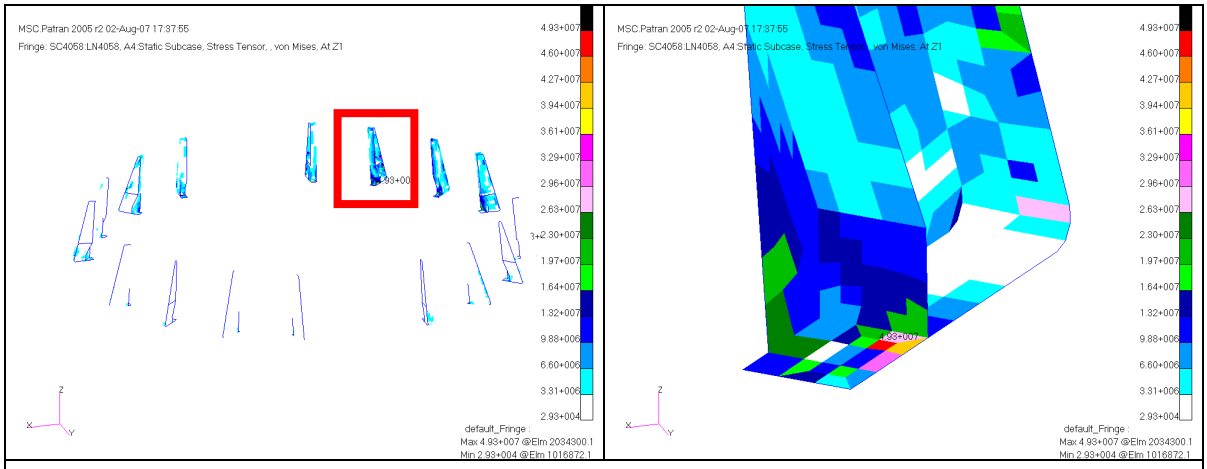

Figure 5-23: Reflector support, Load Case 4058, Layer Z1

5.15.1.4 DEBRIS UPPER CONNECTION

The worst condition is for **ELEMENT 3049482** for **Load Case 4058**.
The resulting stress is: **f = 37.5 MPa**.
Following figure shows stress distribution for this subcase.

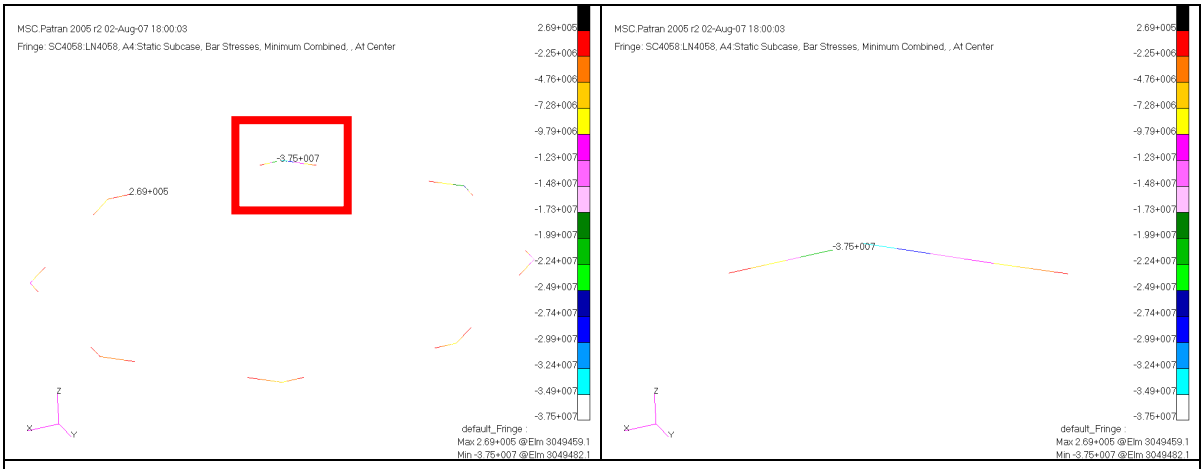

Figure 5-24: Debris Upper Connection, Load Case 4058

Questo documento contiene informazioni di proprietà di CARLO GAVAZZI SPACE SpA. Tutti i diritti sono riservati.
All information contained in this document are property of CARLO GAVAZZI SPACE SpA. All right reserved.

5.15.1.5 INTERNAL CABLE SUPPORTS

The worst condition is for **ELEMENT 549** for **Load Case 5020**.
The resulting stress is: **f_{VM} = 18.8 MPa**.
Following figure shows stress distribution for this subcase.

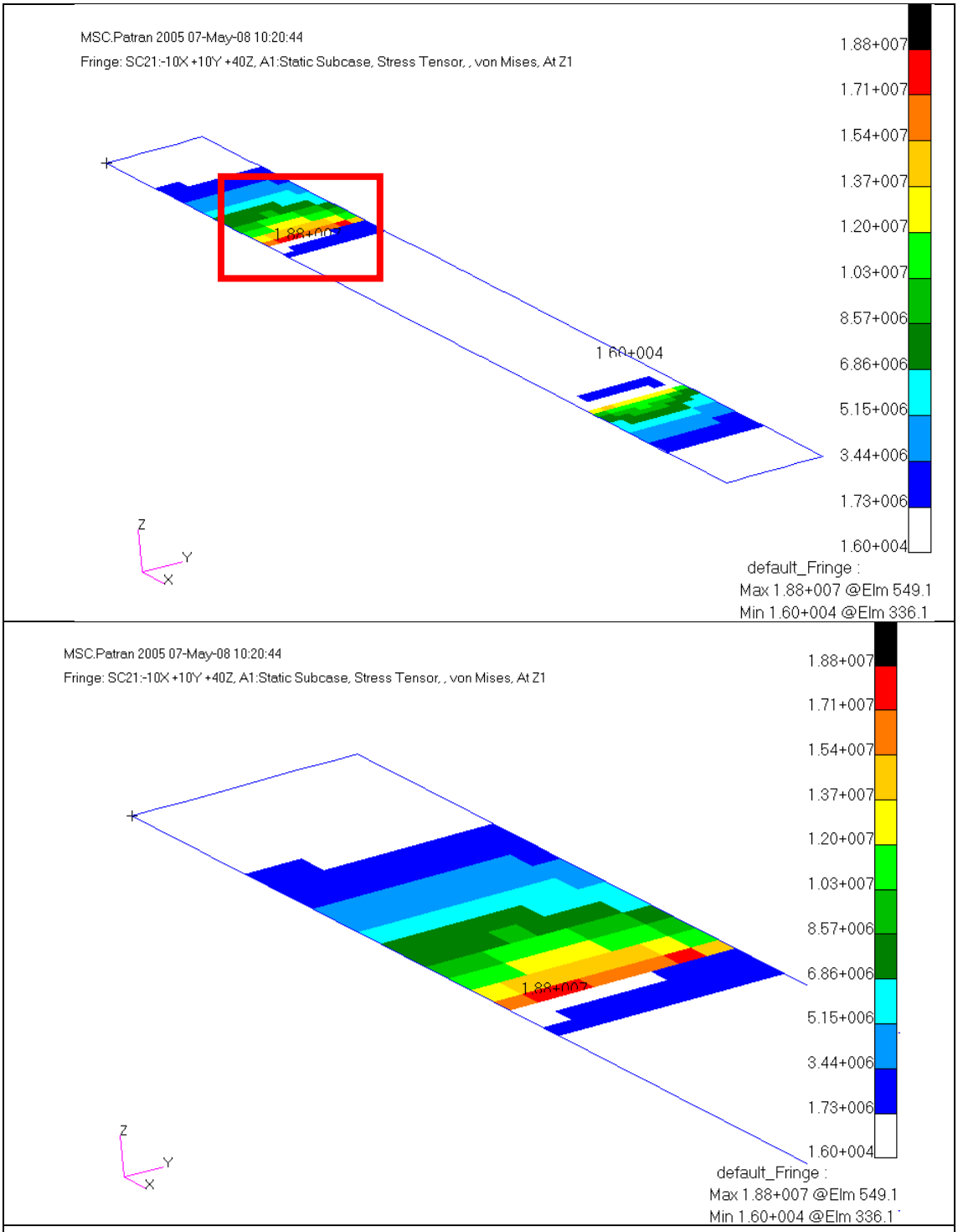

Figure 5-25: Cable support, Load Case 5020

Questo documento contiene informazioni di proprietà di CARLO GAVAZZI SPACE SpA. Tutti i diritti sono riservati.
All information contained in this document are property of CARLO GAVAZZI SPACE SpA. All right reserved.

5.15.1.6 EXTERNAL CABLE SUPPORTS

For the P/N 047003404 the worst condition is for **Load Case 5017**.
The resulting stress is: **f_{VM} = 87.06 MPa**.
Following figure shows stress distribution for this subcase.

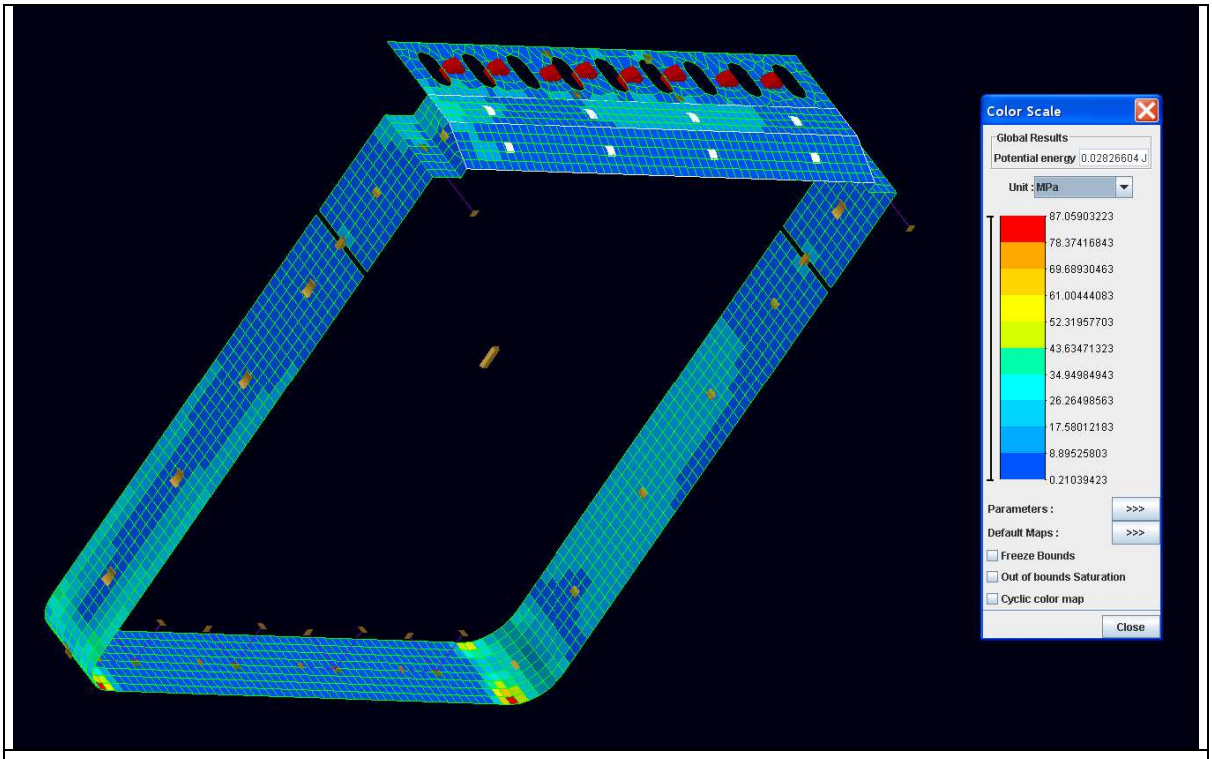

Figure 5-26:External cable support, Load Case 5017

For the P/N 047003403 the worst condition is for **Load Case 5001**.
The resulting stress is: **f_{VM} = 92.33 MPa**.
Following figure shows stress distribution for this subcase.

Questo documento contiene informazioni di proprietà di CARLO GAVAZZI SPACE SpA. Tutti i diritti sono riservati.
All information contained in this document are property of CARLO GAVAZZI SPACE SpA. All right reserved.

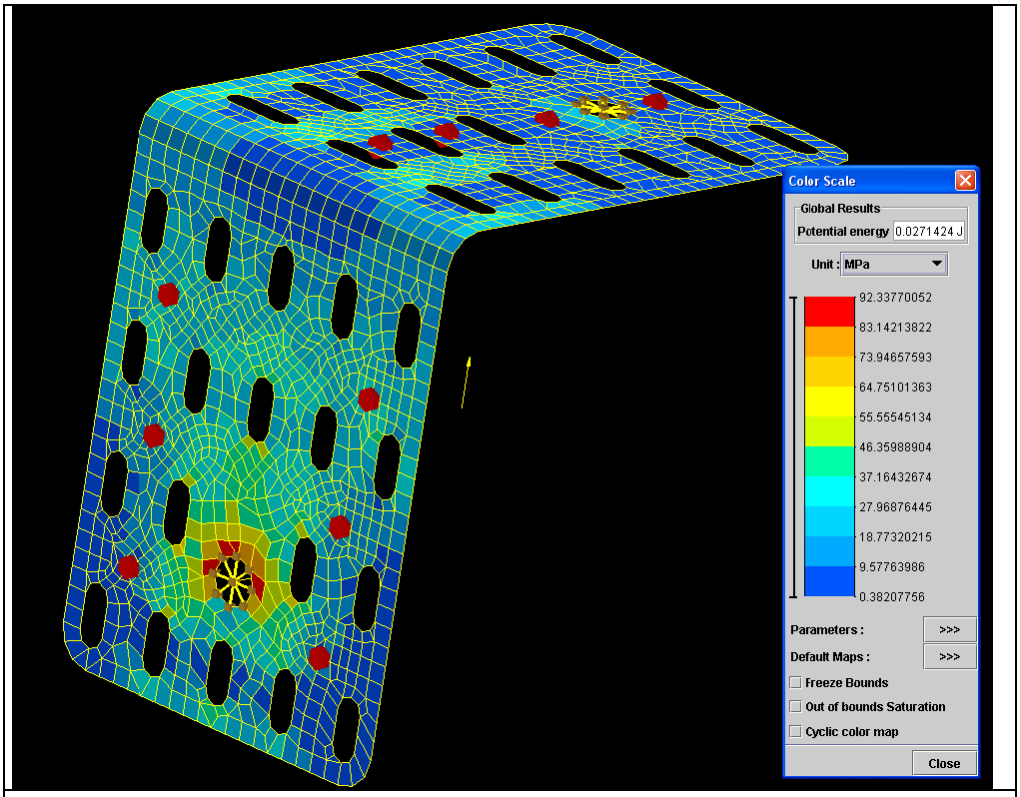

Figure 5-27:External cable support, Load Case 5001

Questo documento contiene informazioni di proprietà di CARLO GAVAZZI SPACE SpA. Tutti i diritti sono riservati.
All information contained in this document are property of CARLO GAVAZZI SPACE SpA. All right reserved.

5.15.2 MARGINS OF SAFETY SUMMARY

In the following tables MoS of the entire structure are showed:

MARGINS OF SAFETY FOR STRENGHT FAILURE (STRESS)													
ITEM	**DRAWING NUMBERS**	**LC**	**EID**	**MATERIAL**	**F_{ty} [MPa] (*)**	**F_{tu} [MPa] (*)**	**Limit stress [MPa]**	**S.F.$_y$**	**S.F.$_u$**	**MoS$_y$**	**MoS$_u$**	**REMARKS**	**REFERENCE PAGE**
External Structure	13-RICSYS-00.001 13-RICSYS-00.002 13-RICSYS-00.003 13-RICSYS-00.004 13-RICSYS-00.005 13-RICSYS-00.006 13-RICSYS-00.007	1003 at Z1	428411	Al 7075 T7351	369	441	91	1.25	2	**>2**	**1.42**	Von Mises	62-66
Debris Brackets	12-RICSYS-00.004 12-RICSYS-00.008 12-RICSYS-00.011 12-RICSYS-00.012	4058 at Z1	2034300	Al 7075 T7351	369	441	49.3	1.25	2	**>2**	**>2**		
Internal Cable Support	12-RICSYS-00.013 12-RICSYS-00.014 12-RICSYS-00.015 12-RICSYS-00.016	5020 at Z1	549	Peek 1000	66	110	18.8	1.25	2	**1.88**	**1.92**		
External Cable Support	047003404	5017 at Z1	-	Al 7075 T7351	369	441	87.06	1.25	2	**1.69**	**>2**		
External Cable Support	047003403	5001 at Z1	-	Al 5083 H111	125	275	92.33	1.25	2	**0.08**	**0.49**		
Debris Upper Connection		4058	3049482	Al 7075 T7351	369	441	37.5	1.25	2	**>2**	**>2**	Minimum Combined	64
DEBRIS SHIELD	12-RICSYS-00.00567	4061	457105	CFRP	850	700	105		2	**>2**			63

Table 5-20: MoS for stress analysis for the structure

Questo documento contiene informazioni di proprietà di CARLO GAVAZZI SPACE SpA. Tutti i diritti sono riservati.
All information contained in this document are property of CARLO GAVAZZI SPACE SpA. All right reserved.

MARGINS OF SAFETY FOR HONEYCOMB

INTRACELL BUCKLING (Biaxial and Shear Loading)

ITEM	Ef [MPa]	Fcy [MPa]	tf [m]	s [m]	Sf	LC	EID	APPLIED STRESS FACE SHEET			VERIFICATION	MoS	REFERENCE PAGE
								fx [Mpa]	fy [Mpa]	fs [Mpa]			
HCOMB	70000	400	0.0007	0.005	2	1023	464405	7.1	-0.8	1.5	0.03	30.1	63

WRINKLING (Biaxial and Shear Loading)

ITEM	Ef [MPa]	G'c [MPa]	E'c [MPa]	Fcy [MPa]	Sf	LC	EID	APPLIED STRESS FACE SHEET			VERIFICATION	MoS	REFERENCE PAGE
								fx [Mpa]	fy [Mpa]	fs [Mpa]			
HCOMB	70000	89	310	400	2	1023	464399	9.1	3.6	-4.6	0.05	20.7	63

COMBINED LOAD STRENGTH

ITEM	SIZE	ALLOWABLE STRESS CORE			APPLIED STRESS CORE			SF	SHEAR [MPa]		AXIAL [MPa]	VERIFICATION		MoS	REFENCE PAGE
		SHEAR [MPa]		AXIAL [MPa]	SHEAR [MPa]		AXIAL [MPa]								
		F'SL	F'SW	F'C	F'sL	F'sW	F'c		RsL	RsW	Ra	$RsL+Ra^2<1$	$RsW+Ra^2<1$	(1/VER)-1	
HCOMB	3/16 5056 .007 2.0	2.30	1.50	1.44	LC 1032	ELM 472400		2	0.0048	-0.0008	-0.0550	0.008	0.002	126.2	63
					0.0056	-0.0006	-0.0396								

Table 5-21: MoS for Honeycomb analysis

Questo documento contiene informazioni di proprietà di CARLO GAVAZZI SPACE SpA. Tutti i diritti sono riservati.
All information contained in this document are property of CARLO GAVAZZI SPACE SpA. All right reserved.

5.16 JOINT ANALYSIS

The analysis of the joints shall be divided in three different kinds of connections:

JOINT #	Description	Material	BOLT TYPE				Torque[1]	Pg
			Name	Diam.	Pitch	Length [mm]		
JOINT 7	External Structure- Debris Shield BKT	A 286 160KSi	NAS 1351N3	0.19 in	32 1/In	12.7	4.2Nm	73
JOINT 8	Debris Shield BKT- Debris Shield	A 286 160KSi	NAS 1351N3	0.19 in	32 1/In	38.1	4.2Nm	74
JOINT 9	Debris Shield upper corner – Debris shield upper corner	A 286 160KSi	NAS 1351N3	0.19 in	32 1/In	38.1	4.2Nm	75

[1] *The installation torque is obtained by the sum of the torque necessary for the self locking device (running torque) and the Torque defined here*

Table 5-22: Joints definition

Summary of joint analysis results are shown in 5.16.2 (MOS SUMMARY FOR JOINT ANALYSIS).
The value of Fsy is evaluated according to RD8, par. 1.4.6.5.
For each joint, bolt separation has been verified using the maximum axial force acting on the bolts .
Other MoS have been calculated using the worst load case for the most loaded bolt (where most loaded means that the forces acting on the selected bolts results in lower MoS, with respect to other bolts).

Questo documento contiene informazioni di proprietà di CARLO GAVAZZI SPACE SpA. Tutti i diritti sono riservati.
All information contained in this document are property of CARLO GAVAZZI SPACE SpA. All right reserved.

The MoS definition for bolts analysis is reported in the next table.

MOS	DESCRIPTION
MS 1	Joint separation
MS 2	Direct Tension Ultimate
MS 3	Direct Tension Yield
MS 4	Total Tension Ultimate
MS 5	Total Tension Yield
MS 6	Direct Thread shear Ultimate
MS 7	Total Thread shear Ultimate
MS 8	Shear Ultimate
MS 9	Bending Ultimate
MS 10	Combined shear, tension and bending ultimate

Table 5-23: MoS definition for bolt analysis

Questo documento contiene informazioni di proprietà di CARLO GAVAZZI SPACE SpA. Tutti i diritti sono riservati.
All information contained in this document are property of CARLO GAVAZZI SPACE SpA. All right reserved.

5.16.1 JOINT GEOMETRY INPUT

In the following table the inputs for the joint verification are presented:

JOINT #	Type of bolted connections	Threaded length [mm]	Washer		Flange 1		Flange 2		Frict. Coeff(1)	Fitting factor
			Thk [mm]	Outer Diam [mm]	Thk [mm]	Mat.	Thk [mm]	Mat.		
JOINT 7	INSERT	12.7	1.6	9	3	Al 7075	8	Al 7075	0.2	1.15
JOINT 8	INSERT	38.1	1.6	9	2	Al 7075	8	Al 6061	0.2	1.15
JOINT 9	INSERT	38.1	1.6	9	2	Al 6061	8	Al 6061	0.2	1.15

Note:
(1) 0.2 for non lubricated joint
0.15 for lubricated joint

Table 5-24: Joint Geometry Input

Questo documento contiene informazioni di proprietà di CARLO GAVAZZI SPACE SpA. Tutti i diritti sono riservati.
All information contained in this document are property of CARLO GAVAZZI SPACE SpA. All right reserved.

5.16.1.1 JOINT 7: EXTERNAL STRUCTURE- DEBRIS SHIELD BKT

RICH external structure to debris shield bracket joints are NAS 1351N3 bolts, made of stainless steel. The following figures show the maximum axial and shear forces.

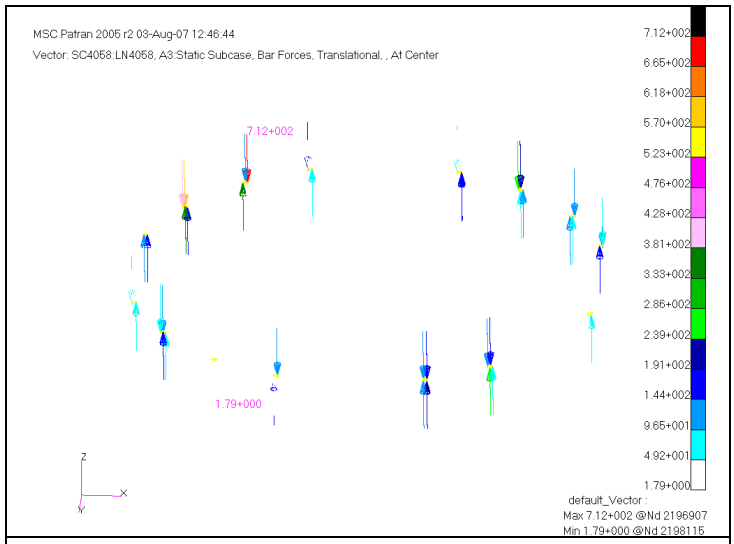

Figure 5-28: JOINT 7: Maximum axial force, load case 4058

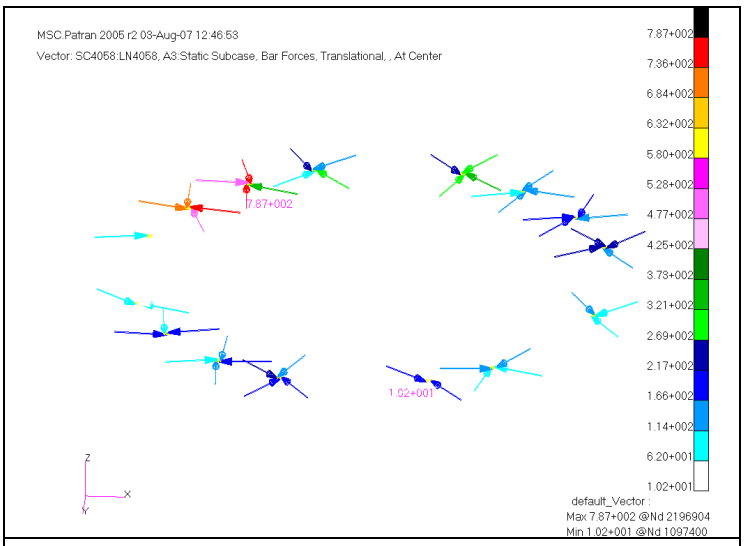

Figure 5-29: JOINT 7: Maximum shear force, load case 4058

Questo documento contiene informazioni di proprietà di CARLO GAVAZZI SPACE SpA. Tutti i diritti sono riservati.
All information contained in this document are property of CARLO GAVAZZI SPACE SpA. All right reserved.

5.16.1.2 JOINT 8: DEBRIS SHIELD BKT- DEBRIS SHIELD

RICH debris shield bracket to debris shield joints are NAS 1351N3 bolts, made of stainless steel A286-160 KSi. The following figures show the maximum axial and shear forces.

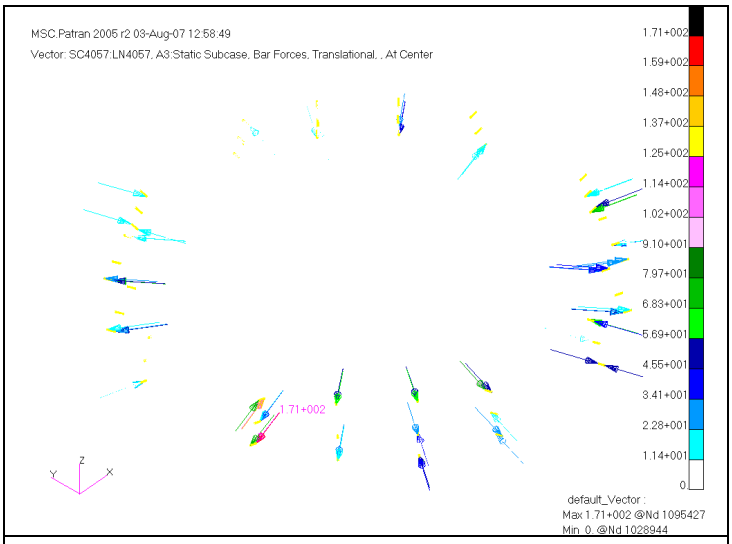

Figure 5-30: JOINT 8: Maximum axial force, load case 4057

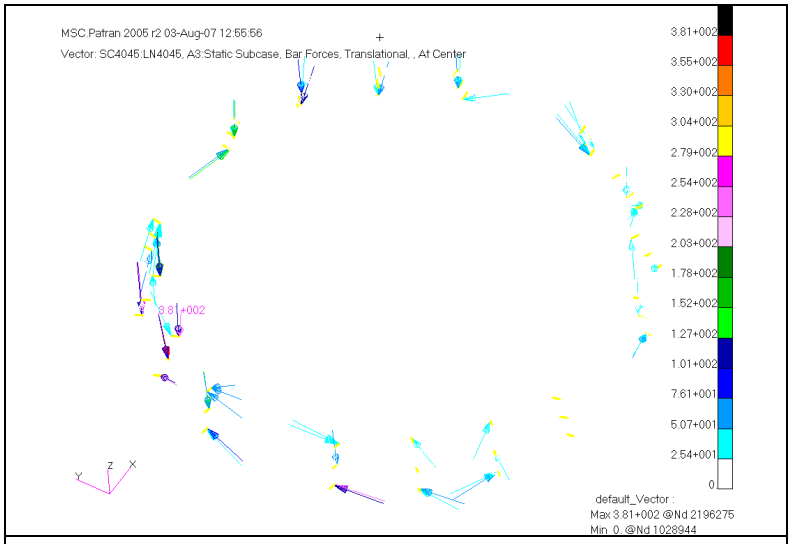

Figure 5-31: JOINT 8: Maximum resultant force, load case 4045

Questo documento contiene informazioni di proprietà di CARLO GAVAZZI SPACE SpA. Tutti i diritti sono riservati.
All information contained in this document are property of CARLO GAVAZZI SPACE SpA. All right reserved.

5.16.1.3 JOINT 9: DEBRIS SHIELD UPPER CORNER - DEBRIS SHIELD UPPER CORNER

RICH debris shield to debris shield joints are NAS 1351N3 bolts, made of stainless steel A286-160 KSi. The following figures show the maximum axial and shear forces.

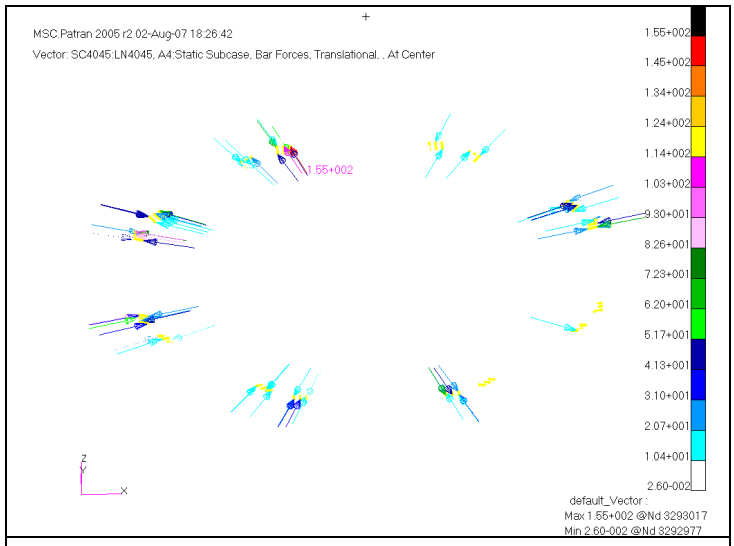

Figure 5-32: JOINT 8: Maximum axial force, load case 4045

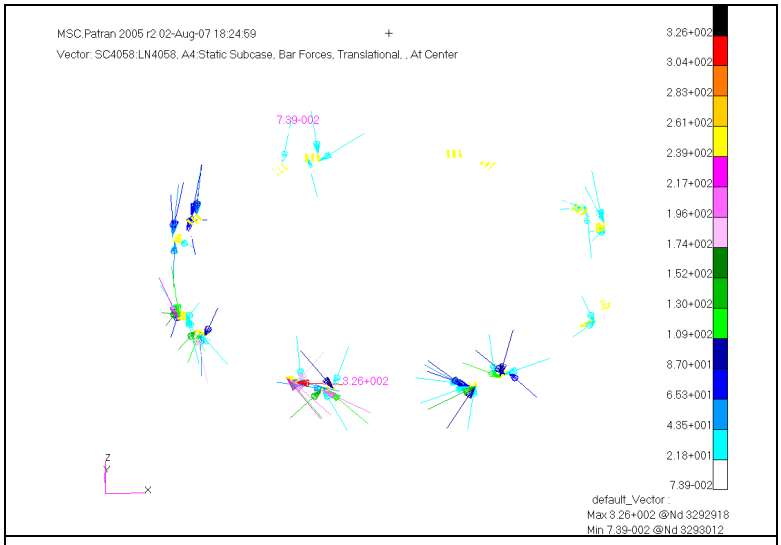

Figure 5-33: JOINT 8: Maximum resultant force, load case 4058

Questo documento contiene informazioni di proprietà di CARLO GAVAZZI SPACE SpA. Tutti i diritti sono riservati.
All information contained in this document are property of CARLO GAVAZZI SPACE SpA. All right reserved.

5.16.2 MOS SUMMARY FOR JOINT ANALYSIS

In the following tables MoS summary for joint analysis is presented.

RICH																		
NOMINAL CONFIGURATION																		
Worst Case for MS 5 = Total tension yield																		
JOINT #	**POSITION**	**BOLT**	**MATERIAL**	**TORQUE AVERAGE**	**APPLIED FORCE**		**MOS RESULTS**											**REMARKS**
					Ax [N]	**Sh [N]**	**MS1**	**MS2**	**MS3**	**MS4**	**MS5**	**MS6**	**MS7**	**MS8**	**MS9**	**MS10**	**MSmin**	
JOINT 7	External Structure- Debris Shield BKT	NAS 1351N3	A 286 160KSi	4.2Nm	712	787	3.14	6.86	8.43	0.5	0.137	6.08	0.35	2.85	10	0.459	0.137	
JOINT 8	Debris Shield BKT- Debris Shield	NAS 1351N3	A 286 160KSi	4.2Nm	171	381	16.46	31.74	38.27	0.53	0.153	28.48	0.38	6.95	10	0.528	0.153	
JOINT 9	Debris Shield upper corner – Debris shield upper corner	NAS 1351N3	A 286 160KSi	4.2Nm	155	362	18.27	35.12	42.33	0.53	0.154	31.52	0.38	7.36	10	0.53	0.154	

Table 5-25 Joint analysis MoS summary

Questo documento contiene informazioni di proprietà di CARLO GAVAZZI SPACE SpA. Tutti i diritti sono riservati.
All information contained in this document are property of CARLO GAVAZZI SPACE SpA. All right reserved.

5.17 VENTING ANALYSIS

The venting analysis for the following components:

- Grid Linear trusses;
- Grid triangular trusses;
- Overall Rich internal volume (conical mirror and grids) by the optical seal;
- Aerogel container;
- RICH mirror/Aerogel container interface.

The reference document for the discharge rate of the space shuttle cargo bay is RD4.

5.17.1 INTRODUCTION

The venting analysis is based on the isothermal discharge:

$$\frac{dP}{dt} = -C_d k \frac{A}{V} \sqrt{\frac{2k}{k-1}\left(\frac{P_0}{\rho_0}\right)^{\frac{1}{k}}} \sqrt{(P_I)^{\frac{3k-1}{k}}\left[\left(\frac{P_E}{P_I}\right)^{\frac{k+1}{2}} - \left(\frac{P_E}{P_I}\right)^{\frac{2}{k}}\right]}$$

Where:

C_d discharge coefficient, which has been conservatively, assumed 0.6;

k specific heat ratio (1.4);

V internal volume;

A total venting area;

P_0 pressure of reference;

ρ_0 density of reference (1.225Kg/m^3);

P_I internal pressure;

P_E external pressure.

In particular this formula is applicable to a simple box with the venting holes perpendicular to their walls. If the considered geometry is more complex than this one, as shown in the chapter 5.17.4 , this calculation has to be modified.

Questo documento contiene informazioni di proprietà di CARLO GAVAZZI SPACE SpA. Tutti i diritti sono riservati.
All information contained in this document are property of CARLO GAVAZZI SPACE SpA. All rights reserved.

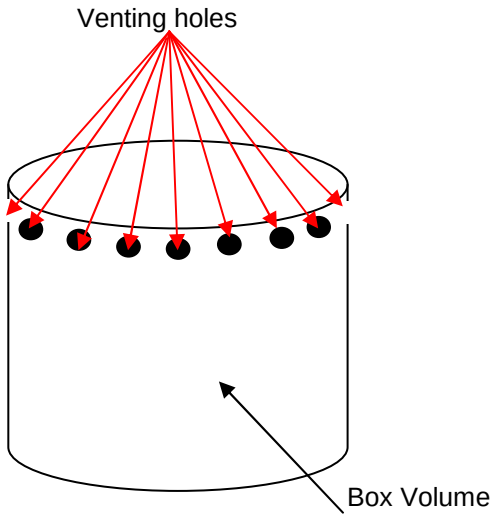

Figure 5-34 Simple box with venting holes

The RICH System shall reach an external pressure of 800Pa within 100s if at the launch there is a pressure of 10^5Pa. The max de-pressurization rate is 3068Pa/s. [see Table 10.6.1.2-1 of RD1]
The starting pressures are:

$P_0 = 10^5$Pa;

$P_I = 10^5$Pa;

$P_E = 10^5$Pa.

5.17.2 GRID LINEAR TRUSSES

The considered dimensions are shown in the following figure:

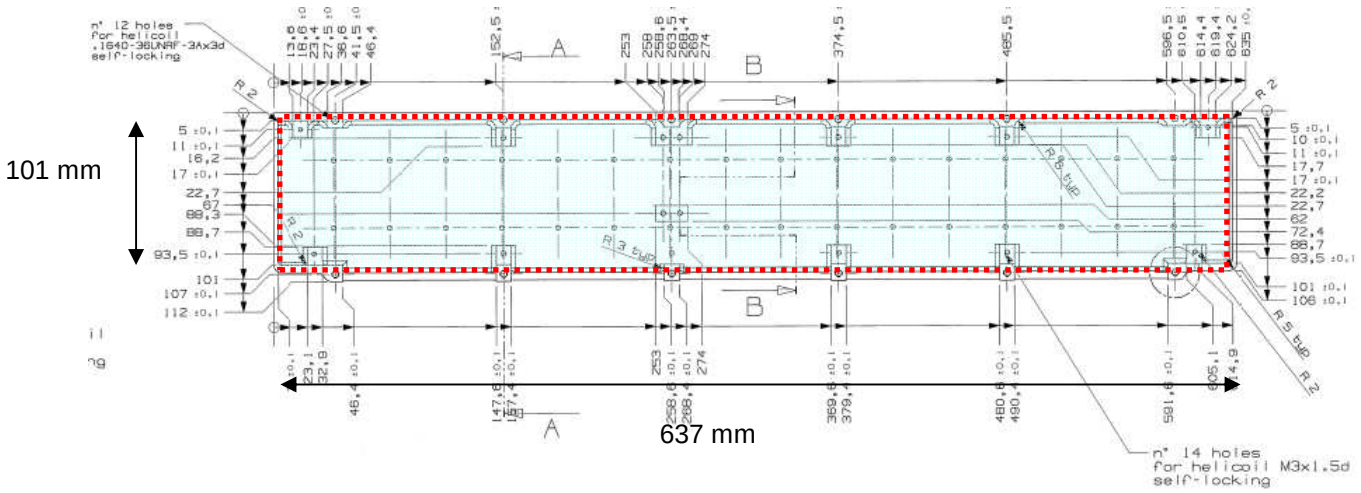

Figure 5-35 Linear truss dimensions

The linear truss depth is 52 mm, therefore the obtained volume is:

Questo documento contiene informazioni di proprietà di CARLO GAVAZZI SPACE SpA. Tutti i diritti sono riservati.
All information contained in this document are property of CARLO GAVAZZI SPACE SpA. All rights reserved.

V= 0.0033 m^3

The pressure difference acceptable value is fixed to 1300 Pa.
The following table and figures show the obtained results:

Coeffificien of drag	Cd	0.6	
Specific heat ratio	K	1.4	
Reference pressure	P0	100000	Pa
Density	Ro	1.225	Kg/m^3
Volume of the box	V	**0.0033**	m^3
External pressure	Pe	100000	Pa
Internal pressure	Pi	100000	Pa
Equivalent Radius	Req	1.50	mm
Equivalent Area	A	7.07E-06	m^2
Diameter of the single hole	d	**1.5**	mm
Area of a single hole	A	1.77E-06	m^2
Number of the holes	N	**4**	
Area of the equivalente hole	Atot	7.07E-06	m^2
Radius of the equivalent hole	Req	1.50E-03	m
Time step for the integration	dt	0.010	s
Depressurization rate	dP/dt (0-10)	30	Pa/s
	dP/dt (10-20)	799.791812	
	dP/dt (20-30)	1213.477232	
	dP/dt (30-40)	1420.319942	
	dP/dt (40-50)	1441.004213	
	dP/dt (50-60)	1351.372372	
	dP/dt (60-70)	1385.846157	
	dP/dt (70-80)	868.739382	
	dP/dt (80-90)	689.4757	
	dP/dt (90-100)	406.790663	

Table 5-26 Grid linear trusses considered data for the venting analysis

Questo documento contiene informazioni di proprietà di CARLO GAVAZZI SPACE SpA. Tutti i diritti sono riservati.
All information contained in this document are property of CARLO GAVAZZI SPACE SpA. All rights reserved.

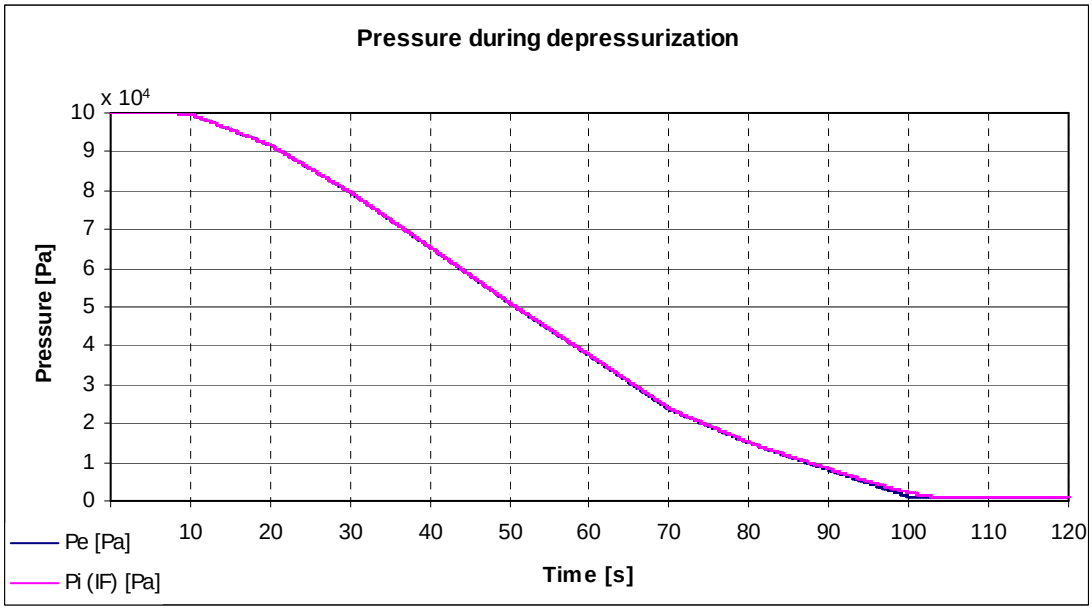

Figure 5-36 External pressure Vs. internal pressure behavior

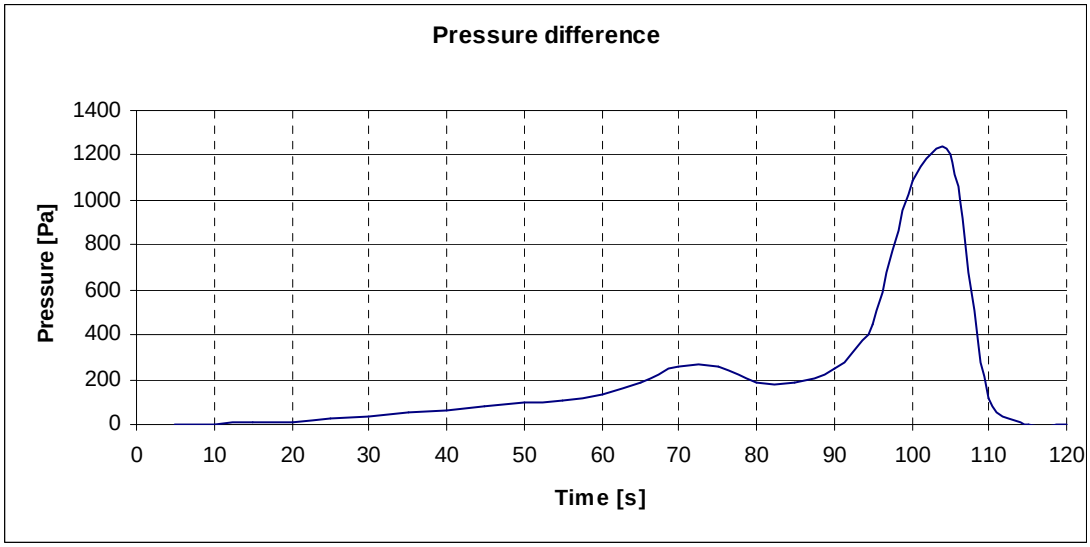

Figure 5-37 External-Internal pressure difference

Questo documento contiene informazioni di proprietà di CARLO GAVAZZI SPACE SpA. Tutti i diritti sono riservati.
All information contained in this document are property of CARLO GAVAZZI SPACE SpA. All rights reserved.

5.17.3 GRID TRIANGULAR TRUSSES

The considered dimensions are shown in the following figure:

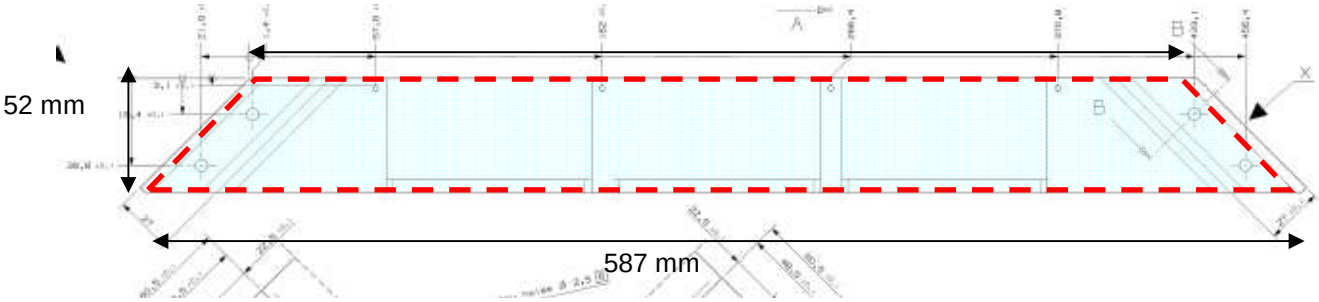

V= 0.0027 m^3

The pressure difference acceptable value is 1300 Pa.
The following table and figures show the obtained results:

Coeffificien of drag	Cd	0.6	
Specific heat ratio	K	1.4	
Reference pressure	P0	100000	Pa
Density	Ro	1.225	Kg/m^3
Volume of the box	V	**0.0027**	m^3
External pressure	Pe	100000	Pa
Internal pressure	Pi	100000	Pa
Equivalent Radius	Req	1.30	mm
Equivalent Area	A	5.30E-06	m^2
Diameter of the single hole	d	**1.5**	mm
Area of a single hole	A	1.77E-06	m^2
Number of the holes	N	**3**	
Area of the equivalente hole	Atot	5.30E-06	m^2
Radius of the equivalent hole	Req	1.30E-03	m
Time step for the integration	dt	0.010	s
Depressurization rate	dP/dt (0-10)	30	Pa/s
	dP/dt (10-20)	799.791812	
	dP/dt (20-30)	1213.477232	
	dP/dt (30-40)	1420.319942	
	dP/dt (40-50)	1441.004213	
	dP/dt (50-60)	1351.372372	
	dP/dt (60-70)	1385.846157	
	dP/dt (70-80)	868.739382	
	dP/dt (80-90)	689.4757	
	dP/dt (90-100)	406.790663	

Table 5-27 Grid triangular trusses considered data for the venting analysis

Questo documento contiene informazioni di proprietà di CARLO GAVAZZI SPACE SpA. Tutti i diritti sono riservati.
All information contained in this document are property of CARLO GAVAZZI SPACE SpA. All rights reserved.

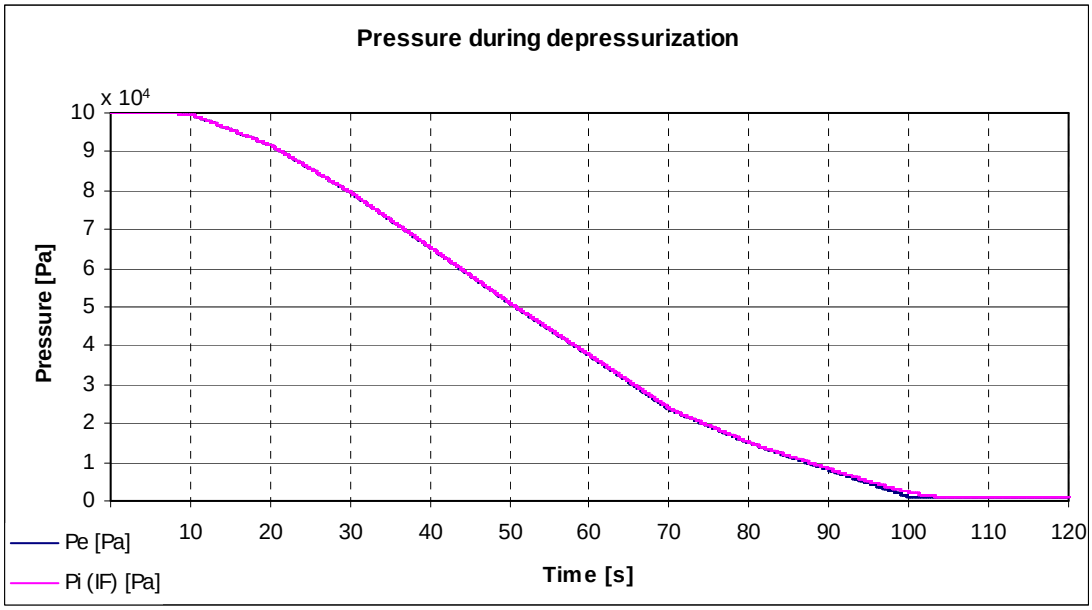

Figure 5-38 External pressure Vs. internal pressure behavior

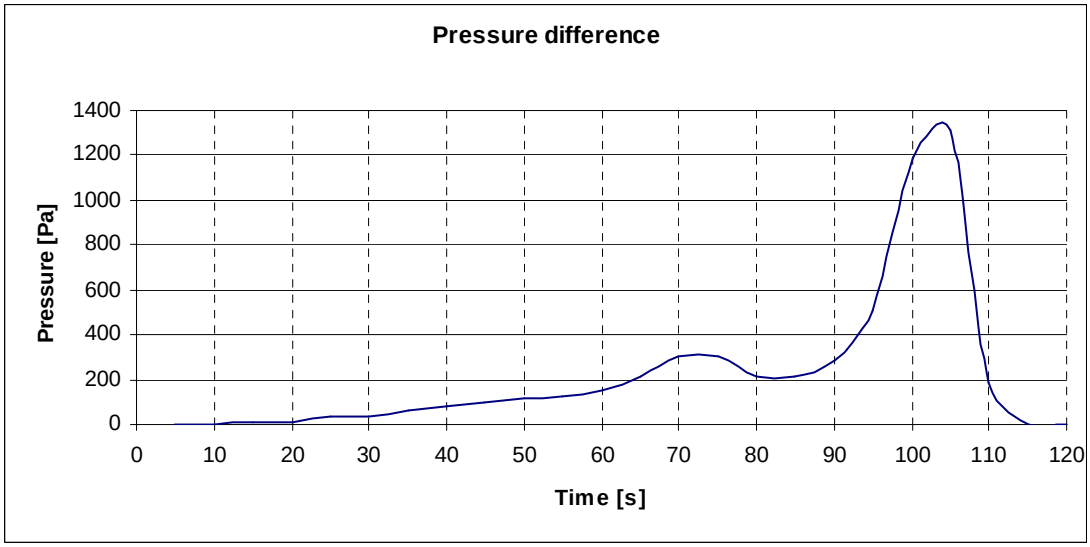

Figure 5-39 External-Internal pressure difference

Questo documento contiene informazioni di proprietà di CARLO GAVAZZI SPACE SpA. Tutti i diritti sono riservati.
All information contained in this document are property of CARLO GAVAZZI SPACE SpA. All rights reserved.

5.17.4 OVERALL RICH INTERNAL VOLUME

The considered dimensions are shown in the following figure:

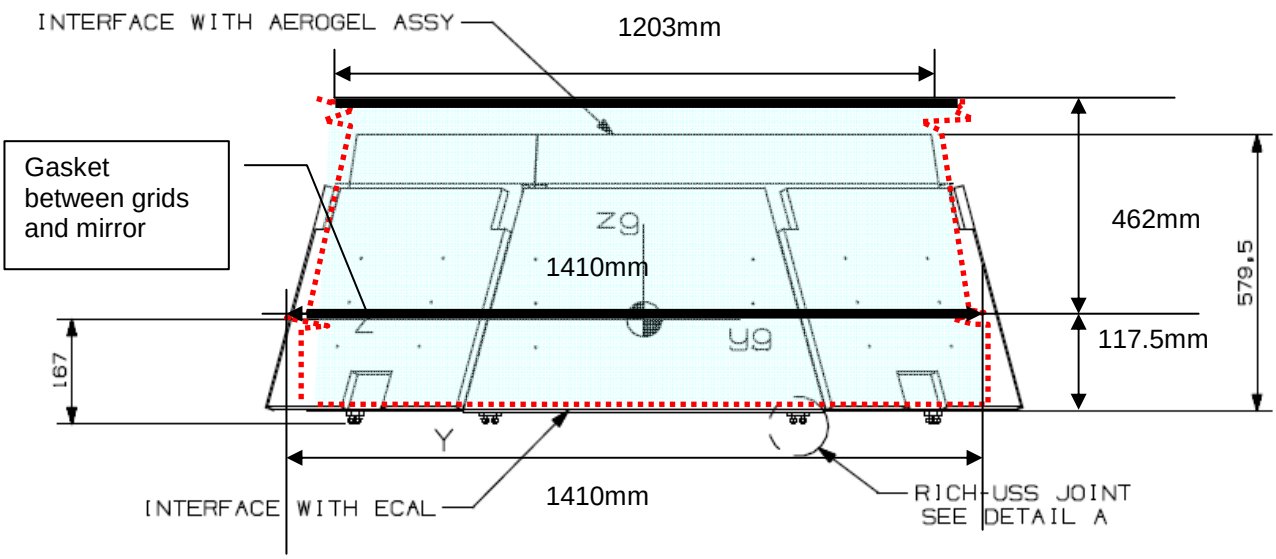

Two gaskets are considered with 20mm thickness, the first one between the conical mirror and the PMT grids and the second one on mirror top.
The total volume is:

$V_{tot} = V_{octagonal\ prism} + V_{gasket_grid_mirror} + V_{conical\ mirror} + V_{gasket_mirror_top} = 0.71\ m^3$

In this case the venting hole shape has to be different than the single box. In particular, in order to avoid the straylight diffusion in the RICH mirror, the holes perpendicular to the walls are not acceptable and a curved depressurization routing must be considered.
In order to determine an equivalent hole area worst case a pipe solution has been considered were additional pressure drops are taken into account. The following figure shows the venting routing conceptual scheme.

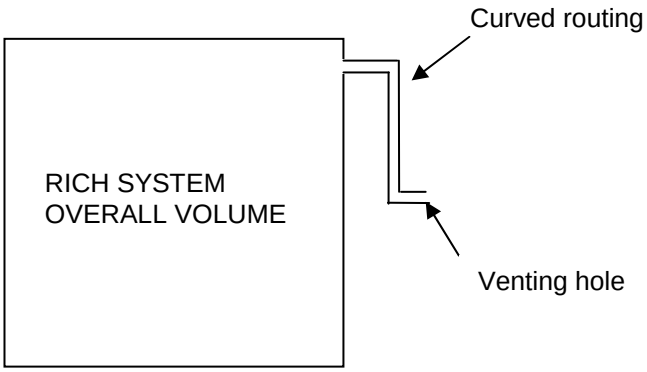

Figure 5-40 RICH internal volume venting hole architecture

The pipe pressure drop has to be added to the isothermal discharge; the following pressure drops are considered:

- A bottleneck at the beginning of the pipe;
- Two 90°curves;
- One meter pipe length.

Questo documento contiene informazioni di proprietà di CARLO GAVAZZI SPACE SpA. Tutti i diritti sono riservati.
All information contained in this document are property of CARLO GAVAZZI SPACE SpA. All rights reserved.

The pressure difference acceptable value is 320 Pa to avoid excessive bending of the bottom cover.
The following table and figures show the obtained results:

Coeffificien of drag	Cd	0.6	
Specific heat ratio	K	1.4	
Reference pressure	P0	100000	Pa
Density	Ro	1.225	Kg/m^3
Volume of the box	V	0.71	m^3
External pressure	Pe	100000	Pa
Internal pressure	Pi	100000	Pa
Equivalent Radius	Req	68.01	mm
Equivalent Area	A	1.45E-02	m^2
Diameter of the single hole	d	3.40E-02	m
Area of a single hole	A	9.08E-04	m^2
Number of the holes	N	16	
Area of the equivalent hole	Atot	1.45E-02	m^2
Radius of the equivalent hole	Req	6.80E-02	m
Time step for the integration	dt	0.010	s
Depressurization rate	dP/dt (0-10)	243.918845	Pa/s
	dP/dt (10-20)	1241.05626	
	dP/dt (20-30)	1544.425568	
	dP/dt (30-40)	1627.162652	
	dP/dt (40-50)	1916.742446	
	dP/dt (50-60)	1282.424802	
	dP/dt (60-70)	1096.266363	
	dP/dt (70-80)	613.633373	
	dP/dt (80-90)	248.211252	
	dP/dt (90-100)	103.421355	

Table 5-28 Overall RICH internal volume considered data for the venting analysis

Questo documento contiene informazioni di proprietà di CARLO GAVAZZI SPACE SpA. Tutti i diritti sono riservati.
All information contained in this document are property of CARLO GAVAZZI SPACE SpA. All rights reserved.

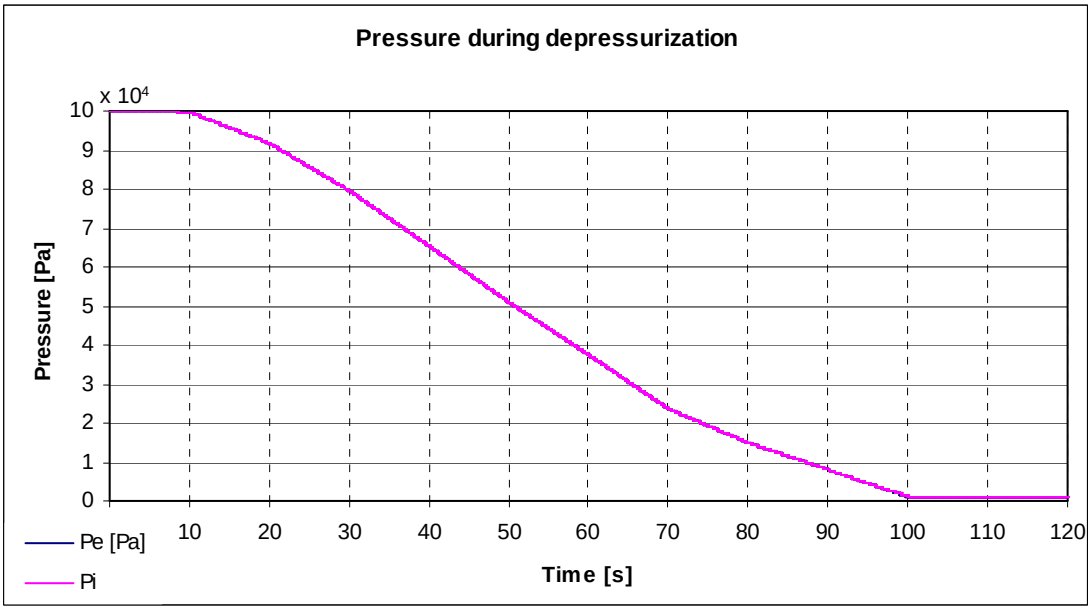

Figure 5-41 External pressure Vs. internal pressure behaviour

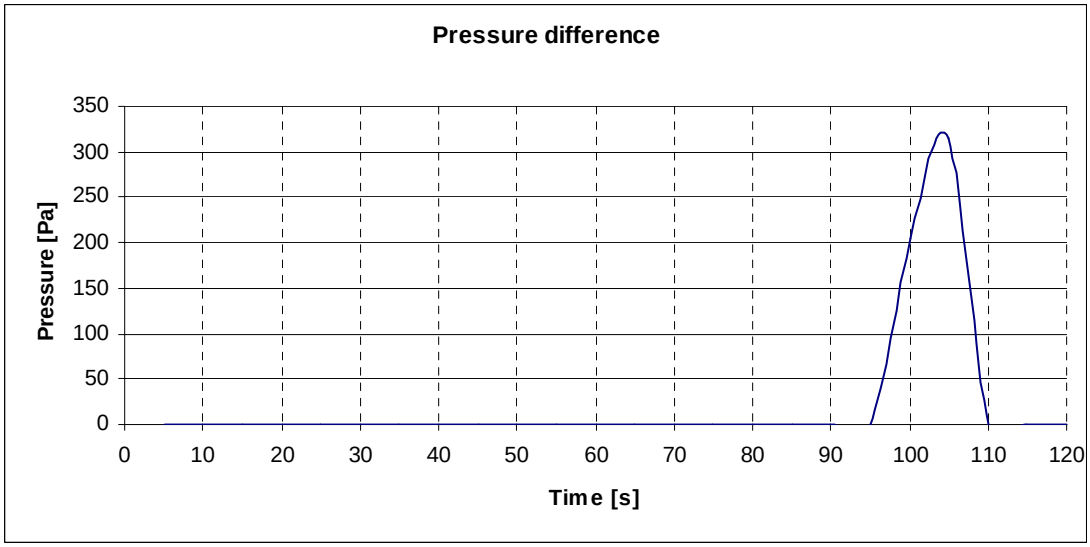

Figure 5-42 External-Internal pressure difference

In this way the target area of 0.014527 m^2 has been fixed.

This venting area has been obtained using a structure fixed to the Debris Shield external surface with two shifted serpentines that guarantee no straylight inside the RICH optical path. The following figure shows this structure detail.

Questo documento contiene informazioni di proprietà di CARLO GAVAZZI SPACE SpA. Tutti i diritti sono riservati.
All information contained in this document are property of CARLO GAVAZZI SPACE SpA. All rights reserved.

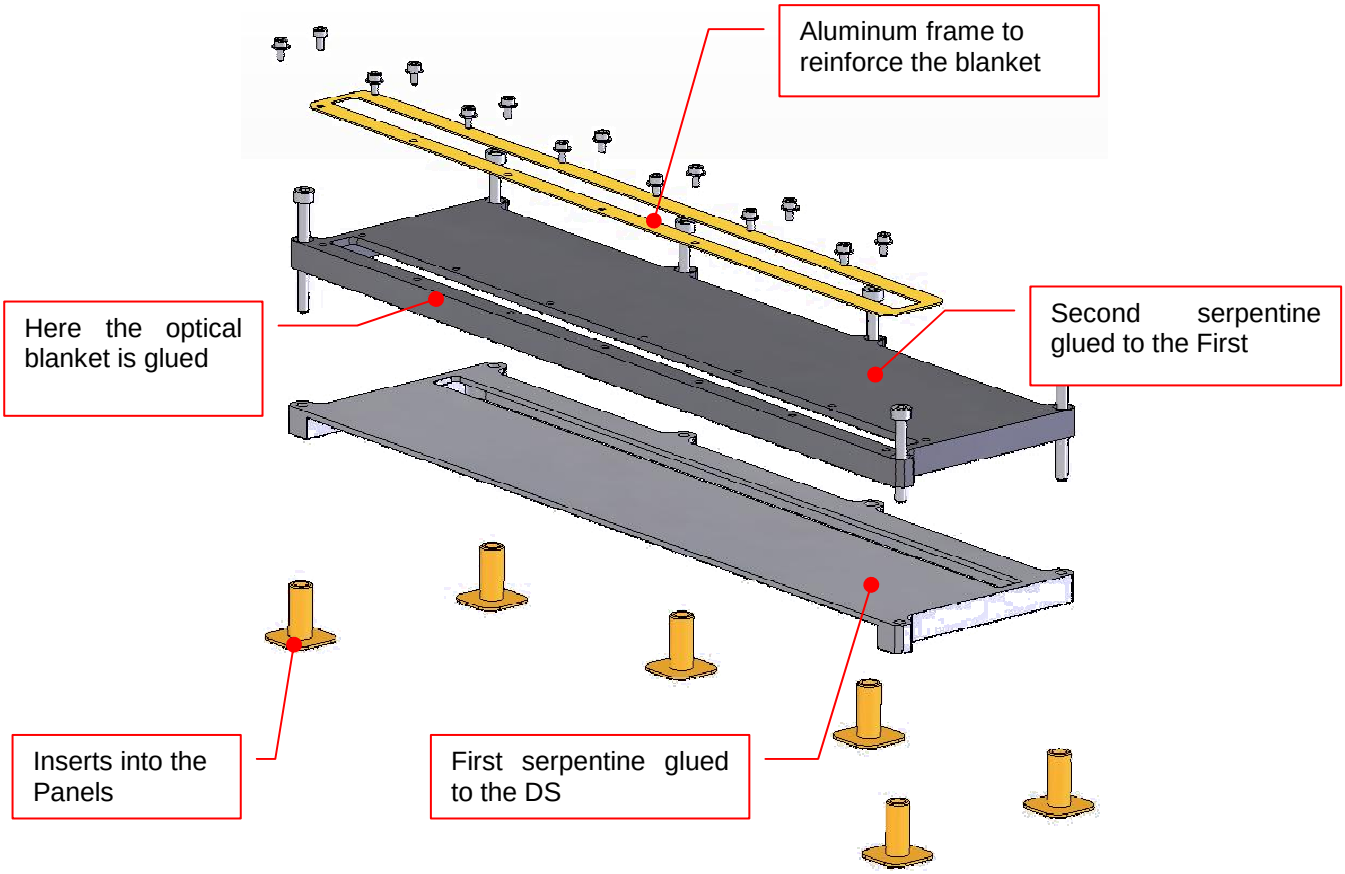

Figure 5-43 Designed structure to obtain the venting area

The following figure shows this structure installed on a Debris Shield.

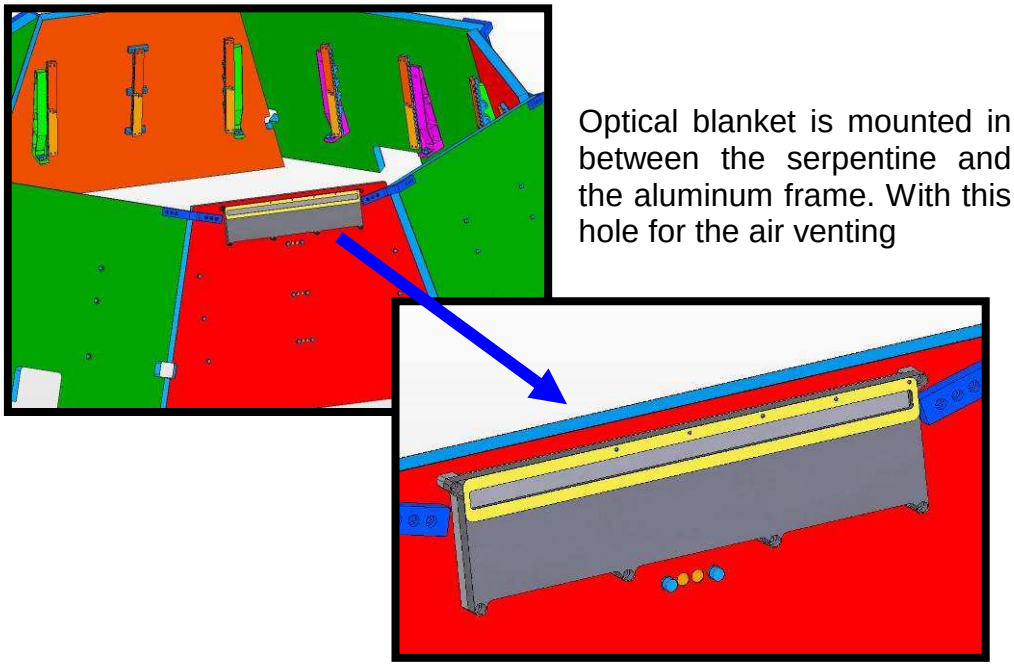

Figure 5-44 Venting structure installed on Debris Shield

Questo documento contiene informazioni di proprietà di CARLO GAVAZZI SPACE SpA. Tutti i diritti sono riservati.
All information contained in this document are property of CARLO GAVAZZI SPACE SpA. All rights reserved.

Using this solution the total venting are is 0.014528 m^2 that satisfies the venting analysis shown in the Table 5-28. The additional weight to the RICH mass is 1 Kg.

Questo documento contiene informazioni di proprietà di CARLO GAVAZZI SPACE SpA. Tutti i diritti sono riservati.
All information contained in this document are property of CARLO GAVAZZI SPACE SpA. All rights reserved.

5.17.5 AEROGEL VOLUME

The volume of gas that has to be evacuated during launch is 0.00425 m^3.
There are 4 one-way valves Halkey Roberts C770RP 0.1 (cracking pressure = 0.1 PSI), with an useful area = 31 mm^2 each.
For this venting analysis, two assumptions have been used:

a) only 2 valves are working
b) the value of the useful area of each valve has been reduced to 60% of the real one, which means 19 mm^2

These values give the following quantities

V = 0.00425 m^3
A = 3.8 10^{-5} m^2.

Internal pressure values are obtained from the previous formula by time-integration of $\frac{dP}{dt}$ (see following figure).

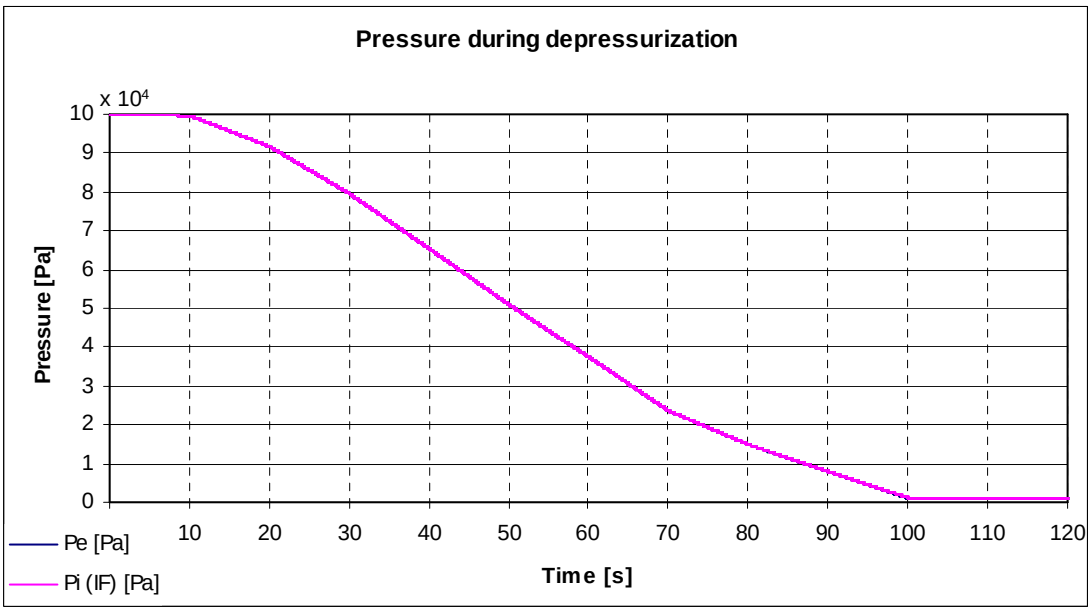

Figure 5-45 External pressure Vs. internal pressure behavior

The difference of the pressures between inside and outside during launch depressurisation is shown in the following figure.

Questo documento contiene informazioni di proprietà di CARLO GAVAZZI SPACE SpA. Tutti i diritti sono riservati.
All information contained in this document are property of CARLO GAVAZZI SPACE SpA. All rights reserved.

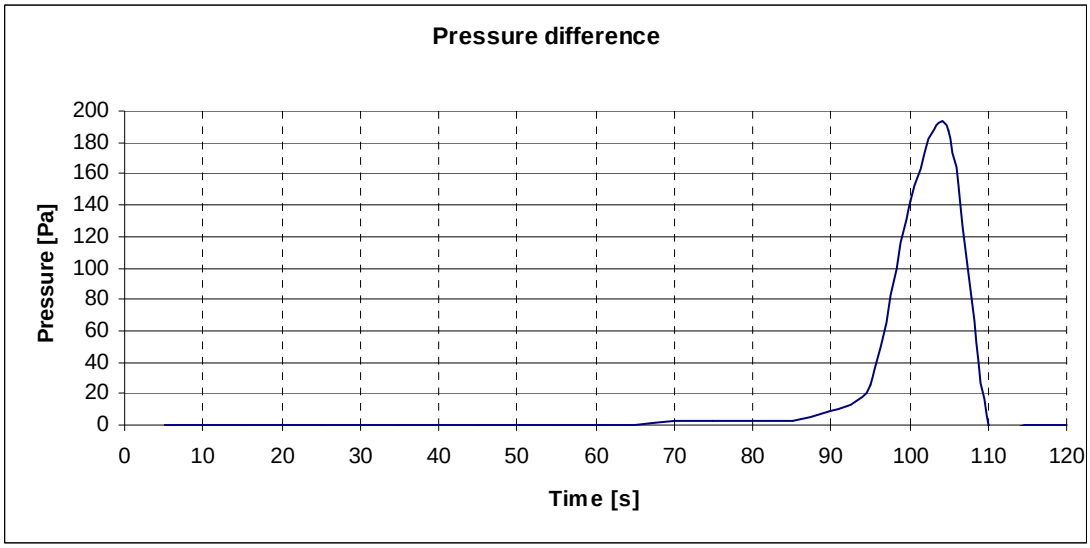

Figure 5-46 External-Internal pressure difference

5.17.6 PRESSURE DIFFERENCE RICH VS. AEROGEL

The pressure difference between the RICH system and the aerogel has been evaluated.

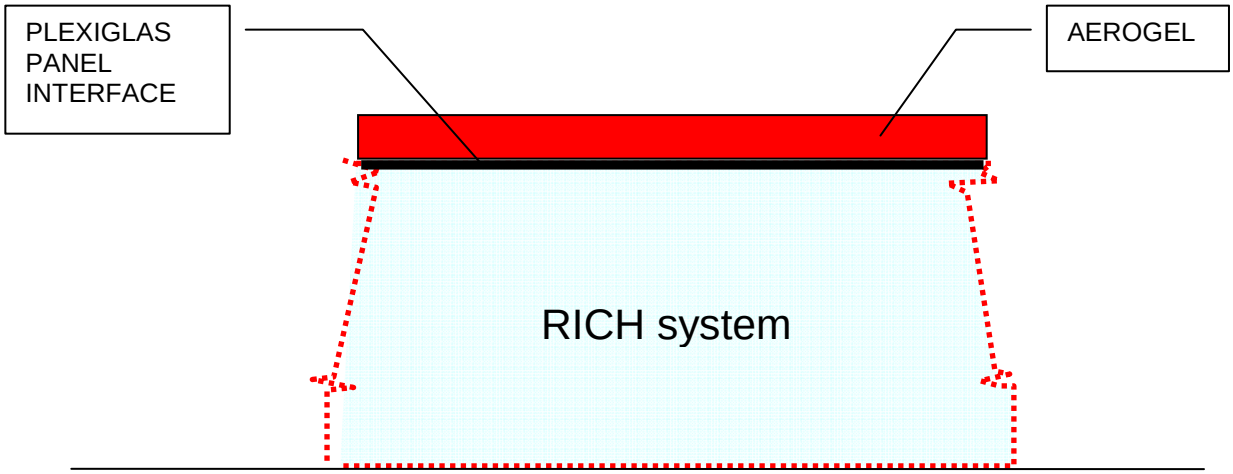

Figure 5-47 RICH System and Aerogel interface

The pressure difference on the plexiglas panel interface was calculated considering the internal pressure of RICH System internal overall volume (chapter 5.17.4) and Aerogel (chapter 5.17.5).
The following plot shows the pressure difference vs. time.

Questo documento contiene informazioni di proprietà di CARLO GAVAZZI SPACE SpA. Tutti i diritti sono riservati.
All information contained in this document are property of CARLO GAVAZZI SPACE SpA. All rights reserved.

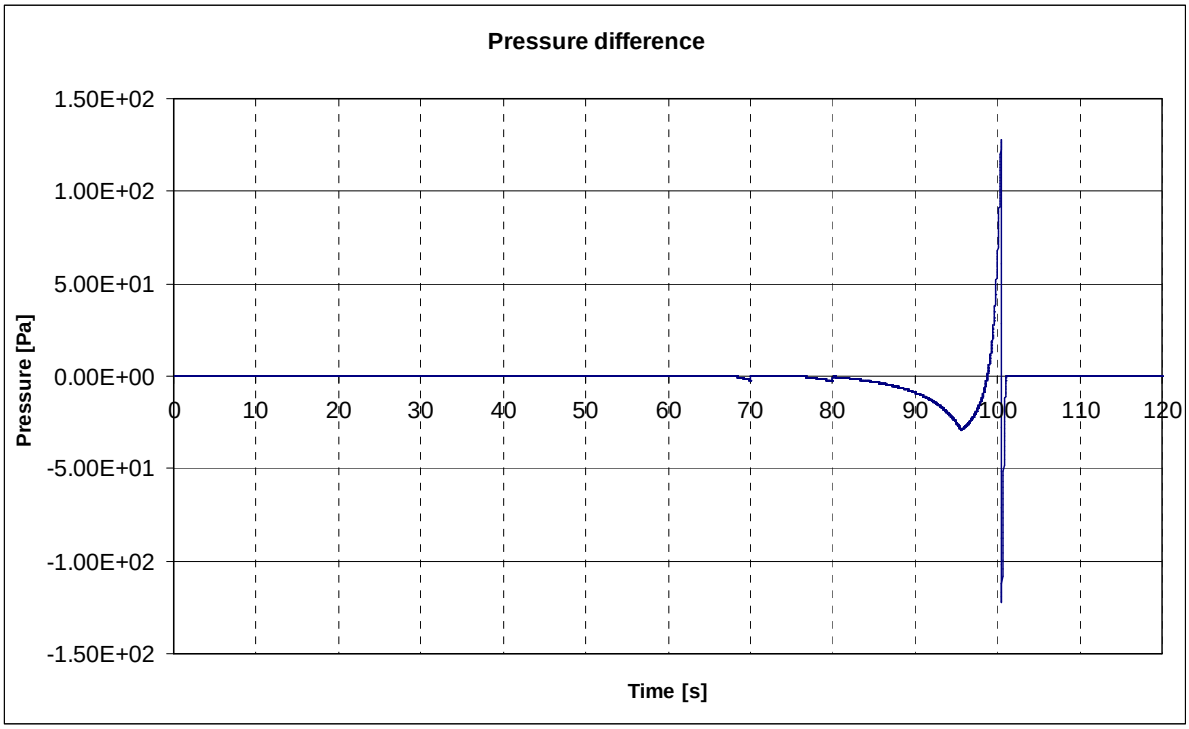

Figure 5-48 Pressure difference between RICH System and Aerogel

Questo documento contiene informazioni di proprietà di CARLO GAVAZZI SPACE SpA. Tutti i diritti sono riservati.
All information contained in this document are property of CARLO GAVAZZI SPACE SpA. All rights reserved.

5.18 INCREMENTAL DESIGN VERIFICATION CONCLUSIONS AND COMMENTS

In this document the engineering activities and the verification by analysis have been described; in particular:

- Debris Shield:
  - Debris Shield design (DS, support brackets and harness) has been described (par. 4.1 4.2) and analyzed (chp. 5);
- RICH detector:
  - the RICH detector analysis has been updated wrt the design modification (chp. 5):
    - the 1st natural frequency of the assembly is 105 Hz (see chapter 5.14.1) there are some modes with frequency lower than 50Hz but they are not considered because they have an effective mass lower than1%;
    - all MoS are positive for all applied loads; see chapters 5.15.2 for the stress verification, chapters 5.16.2 for joints verification;
- Aerogel Container:
  - The Aerogel container purging system (connections and the fixing technique to the LTOF structure) design has been described (par. 4.6);
  - The NaF container design has been described (par. 4.5);
- Harness Routing:
  - The harness connections and fixing techniques have been described (chp. 4.3 and chp. 4.4) and verified (chp. 5.15.1.5 and chp. 5.15.1.6) both for internal and external RICH cables;
- Optical seal:
  - The optical sealing technique has been described providing the material data and the blancket envelopes (par. 4.7);
- Venting analysis:
  - The overall RICH system venting analysis has been described (par. 5.17).
    - For the linear truss 4 holes with 1.5 mm diameter are needed to limit the overpressure to 1200 Pa (chp. 5.17.2);
    - For the triangular truss 3 holes with 1.5 mm diameter are needed to limit the overpressure to 1200 Pa (chp. 5.17.3);
    - For the RICH System overall internal volume an equivalent area of 0.0145 m^2 is necessary (the pressure value driver , 320 Pa is the bending of the bottom cover panel). The selected design implementation and the preliminary test results are shown in the chp. 5.17.4 ;
    - For the Aerogel the valves guarantee to limit the overpressure to 200 Pa (chp. 5.17.5);
    - The pressure difference across the Plexiglas interface panel placed between the RICH mirror and the Aerogel is less than 150 Pa; this pressure value gives low loads wrt inertial loads and then its effect is negligible (chp. 5.17.6).

Questo documento contiene informazioni di proprietà di CARLO GAVAZZI SPACE SpA. Tutti i diritti sono riservati.
All information contained in this document are property of CARLO GAVAZZI SPACE SpA. All rights reserved.