DELIVERED DOCUMENTS

LIST OF DELIVERED DOCUMENTS INCLUDED IN THIS SECTION:

DESCRIPTION / DOCUMENT NUMBER	DATE
RICSYS-TN-CGS-003 RICH HEATERS and THERMOSTATS INTEGRATION DESCRIPTION	Issue 1 21/06/2007
RTEM-DP-0001-AAE RICH BOTTOM MLI DATA PACKAGE	Issue 2 29/10/2007

All information contained in this document are property of CARLO GAVAZZI SPACE SpA. All rights reserved.

ORIGINALE ARCHIVIO

CARLO GAVAZZI SPACE SpA

RICH System

Tipo Doc : *Doc.Type:* TECHNICAL NOTE			N° DRD: *DRD N°:* NA
N° Doc.: *Doc. N°:* RICSYS-TN-CGS-003	Ediz.: *Issue:* 1	Data: *Date:* 21/06/2007	Pagina *Page* 1 Di *Of* 17
Titolo : *Title :* RICH HEATERS AND THERMOSTATS INTEGRATION DESCRIPTION			

	Nome & Funzione *Name & Function*	Firma *Signature*	Data *Date*
Preparato da: *Prepared by:*	Franzoso A (DT/MT)		21/6/07
Approvato da: *Approved by:*	Cinquepalmi C. (PC/CC) Cremonesi. (PA/SF) Molina M. (DT/MT)		03 07 07 03.07.07 22/6/07
Applicazione autorizzata da: *Application authorized by:*	Olivier M. (DT/MT)		22-06-07
Customer / Higher Level Contractor			
Accettato da: *Accepted by:*			
Approvato da: *Approved by:*			

LISTA DI DISTRIBUZIONE *DISTRIBUTION LIST*	N	A	I
Interna / *Internal*			
Esterna / *External*			
ASI	1		
INFN BO	1		
CIEMAT	1		

N=Numero di copie A=Applicazione I=Informazione
N=Number of copy A=Application I=Information

Gestione documenti: *Data Management:* Firma / *Signature* Data / *Date* 03.07.07

File: RICSYS-TN-CGS-003_Iss1.doc

Questo documento contiene informazioni di proprietà di CARLO GAVAZZI SPACE SpA: Tutti i diritti sono riservati
All information contained in this document are property of CARLO GAVAZZI SPACE SpA. All right reserved.

REGISTRAZIONE DELLE MODIFICHE / *CHANGE RECORD*

EDIZIONE *ISSUE*	DATA *DATE*	AUTORIZZAZIONE *CHANGE AUTHORITY*	OGGETTO DELLA MODIFICA E SEZIONI AFFETTE *REASON FOR CHANGE AND AFFECTED SECTIONS*
1	21/06/2007		First Issue

Questo documento contiene informazioni di proprietà di CARLO GAVAZZI SPACE SpA. Tutti i diritti sono riservati.
All information contained in this document are property of CARLO GAVAZZI SPACE SpA. All right reserved.

LISTA DELLE PAGINE VALIDE / *LIST OF VALID PAGES*

PAGINA *PAGE*	EDIZIONE *ISSUE*	PAGINA *PAGE*	EDIZIONE *ISSUE*	PAGINA *PAGE*	EDIZIONE *ISSUE*	PAGINA *PAGE*	EDIZIONE *ISSUE*	PAGINA *PAGE*	EDIZIONE *ISSUE*
1 - 17	1								

Questo documento contiene informazioni di proprietà di CARLO GAVAZZI SPACE SpA Tutti i diritti sono riservati
All information contained in this document are property of CARLO GAVAZZI SPACE SpA. All right reserved.

TABLE OF CONTENT

1. ACRONYMS 5

2. APPLICABLE DOCUMENT 5

3. REFERENCE DOCUMENT 5

4. SCOPE 6

5. RICH HEATERS AND THERMOSTATS DESCRIPTION 6

6. HEATERS INTEGRATION 7

6.1 INTEGRATION POSITION 7
6.2 GLUING SEQUENCE 11
6.3 LABELLING 12
6.4 LABELLING SEQUENCE 13

7. THERMOSTATS INTEGRATION 15

7.1 INTEGRATION POSITION 15
7.2 GLUING SEQUENCE 17

LIST OF FIGURES

Figure 5-1: RICH heaters and thermostats schematics 6
Figure 6-6: heaters gluing example 11
Figure 6-7: Example of labels content for an heater (specifically, the Ram-Port one) 12
Figure 6-8: Labeling sequence (not flight labels, **remove before flight!**) 14
Figure 7-1: In blue, thermostats location (highlighted by red arrows). Thermostats in each location drive the 2 adjacent heaters (shown in one corner only, in green) 15
Figure 7-3: thermostats gluing example 17

Questo documento contiene informazioni di proprietà di CARLO GAVAZZI SPACE SpA. Tutti i diritti sono riservati
All information contained in this document are property of CARLO GAVAZZI SPACE SpA. All right reserved.

1. ACRONYMS

AMS: Alpha Magnetic Spectrometer

ISS : International Space Station

PMT: Photo Multiplier Tube

RICH : Ring Imaging Cherenkov Counter

EM : Engineering Model

FM : Flight Model

PA : PRODUCT ASSURANCE

PDS: Power Distribution System

PI : Principal Investigator

TOF: Time Of Flight

USS: Unique Support Structure

2. APPLICABLE DOCUMENT

AD	Doc. Number	Issue	Date	Title/Applicability
1	AMS02-TN-CGS-007	2	16/10/2006	AMS-02 120VDC AND 28 VDC HEATER DESCRIPTION
2	AMS02-TN-CGS-004	5	02/03/2005	PRELIMINARY THERMAL REQUIREMENTS FOR AMS02 INTERNAL INTERFACES
3	RICSYS-RP-CGS-010	2	08/07/2005	RICH Thermal control system design report

3. REFERENCE DOCUMENT

RD	Doc. Number	Issue	Date	Title/Applicability

Questo documento contiene informazioni di proprietà di CARLO GAVAZZI SPACE SpA. Tutti i diritti sono riservati.
All information contained in this document are property of CARLO GAVAZZI SPACE SpA. All right reserved.

4. SCOPE

The scope of this document is to provide the required information to install the RICH heaters and thermostats according to the applicable documents.

5. RICH HEATERS AND THERMOSTATS DESCRIPTION

RICH is equipped by 8 Kapton foil heaters glued on the Octagonal structure. The RICH heaters are double-layer type and the two layers of each heater are supplied by line A and line B of the PDS respectively.
Heater operation are controlled by means of PDS switch and 4 mechanical thermostats for each of the two PDS bus. Detailed heater schematics is provided hereafter:

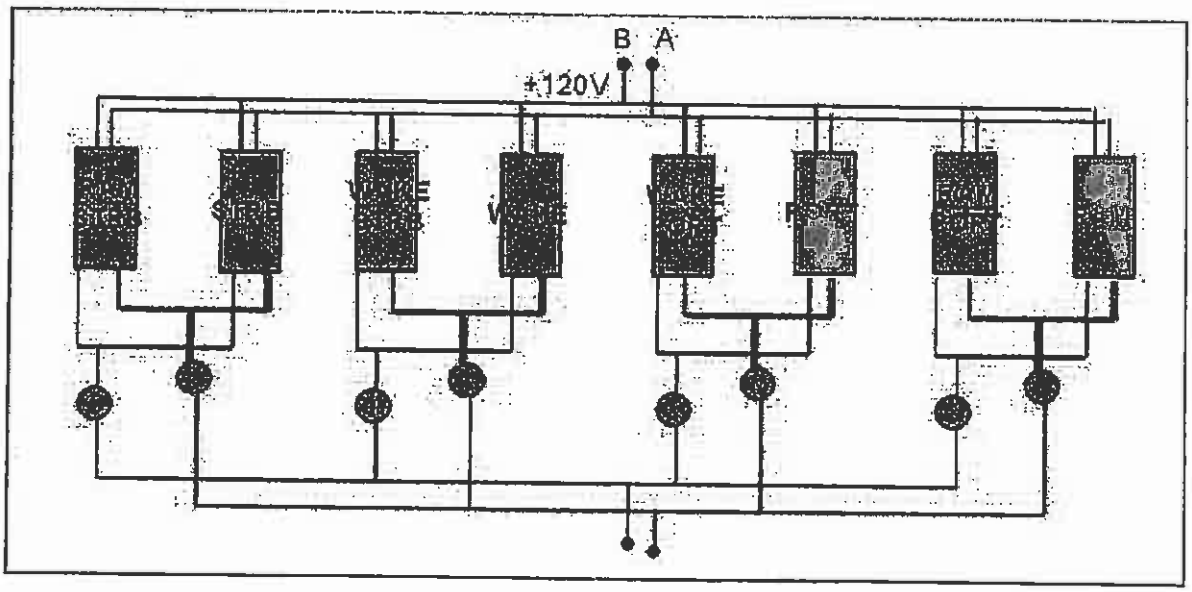

Figure 5-1: RICH heaters and thermostats schematics

Questo documento contiene informazioni di proprietà di CARLO GAVAZZI SPACE SpA. Tutti i diritti sono riservati.
All information contained in this document are property of CARLO GAVAZZI SPACE SpA. All right reserved.

6. HEATERS INTEGRATION

6.1 INTEGRATION POSITION

The following picture shows heaters (red patches) position on the top side of the RICH octagonal structure (the heaters patches are glued in the middle part of each section):
The heater patches are of 2 types:

- heater A (dimensions 250 x 30 mm2) and
- heater B (dimensions 200 x 38 mm2).

Heater Type	ESA P/N	dimensions
Heater A	R0633	250x30 mm^2
Heater B	R0634	200x38 mm^2

Table 6-1 : *Heaters identification codes*

Heater A patches are mounted on the longer beams, while the shorter patches (heater B) are mounted on the triangular beams.

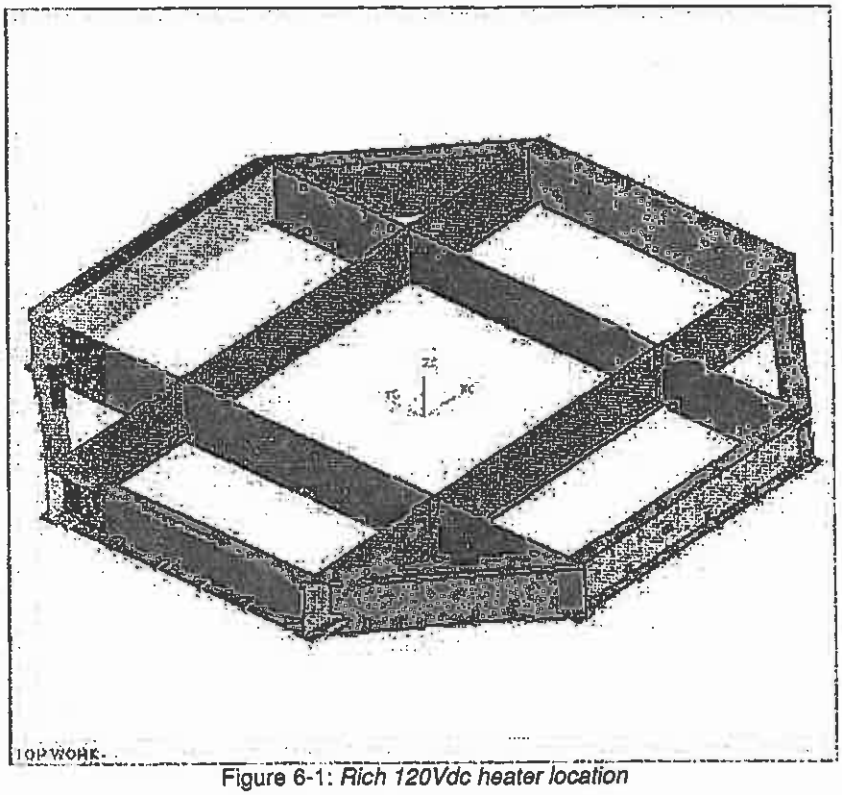

Figure 6-1: *Rich 120Vdc heater location*

Questo documento contiene informazioni di proprietà di CARLO GAVAZZI SPACE SpA. Tutti i diritti sono riservati.
All information contained in this document are property of CARLO GAVAZZI SPACE SpA. All right reserved.

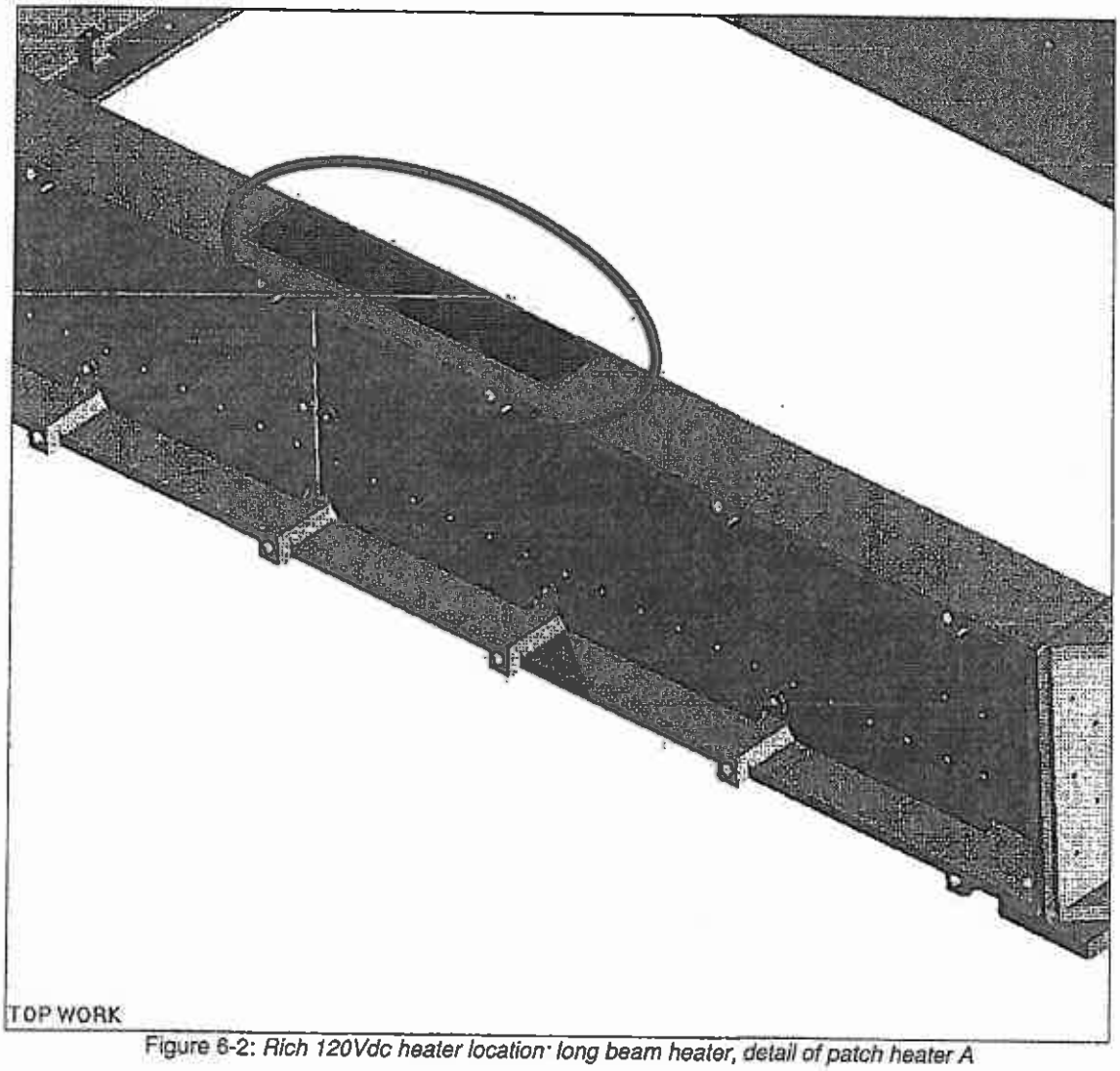

Figure 6-2: *Rich 120Vdc heater location· long beam heater, detail of patch heater A*

Questo documento contiene informazioni di proprietà di CARLO GAVAZZI SPACE SpA. Tutti i diritti sono riservati.
All information contained in this document are property of CARLO GAVAZZI SPACE SpA. All right reserved.

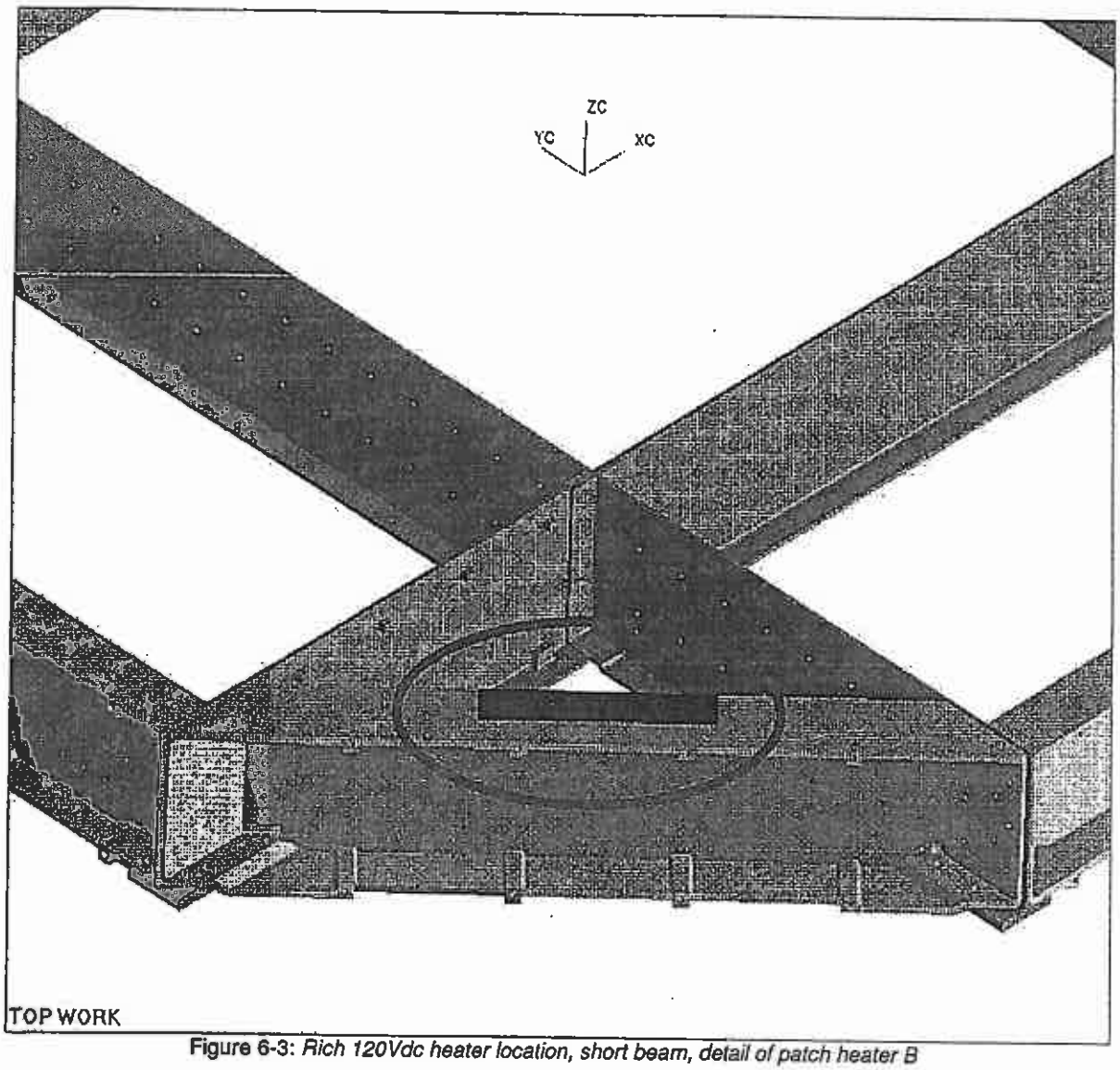

Figure 6-3: *Rich 120Vdc heater location, short beam, detail of patch heater B*

The following table summarizes the information related to the heaters used at RICH level:

PDS bus	PDS line	Patch Heater power @ at 113Vdc, W	Patch Heater resistance, Ω	Number of patches	Patch dimensions, mm	Power density @ 126.5Vdc, W/cm2	Total power consumption @ 113Vdc, W
A	7	8.75	1459+/-2%	4	250x30 (AWG 24)	0,15	70W (8.75 x 8)
		8.75	1459+/-2%	4	200x38 (AWG 24)	0,14	

Table 6-2 *RICH 120Vdc heaters for side A. Side B is the same*

Questo documento contiene informazioni di proprietà di CARLO GAVAZZI SPACE SpA. Tutti i diritti sono riservati.
All information contained in this document are property of CARLO GAVAZZI SPACE SpA. All right reserved.

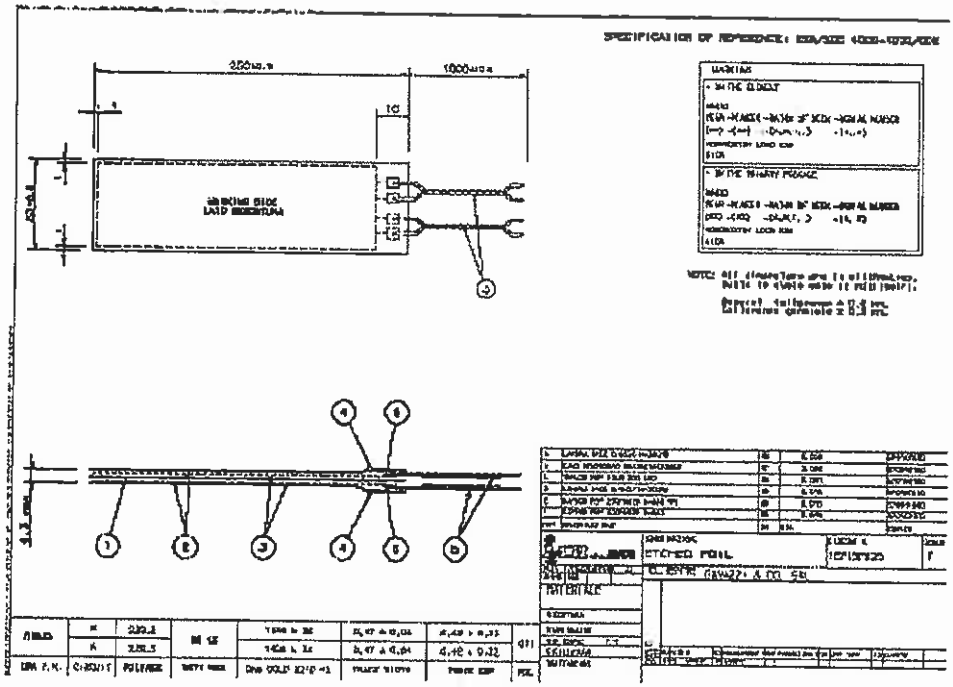

Figure 6-4: *Rich 120Vdc heater heater A*

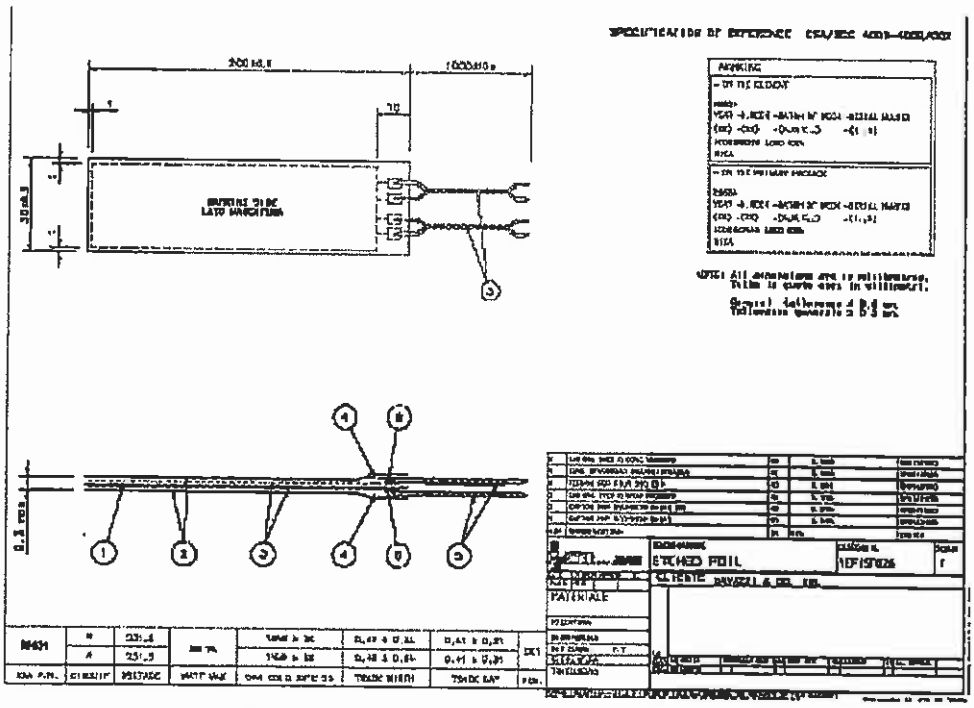

Figure 6-5: *Rich 120Vdc heater heater B*

Questo documento contiene informazioni di proprietà di CARLO GAVAZZI SPACE SpA. Tutti i diritti sono riservati.
All information contained in this document are property of CARLO GAVAZZI SPACE SpA. All right reserved.

6.2 GLUING SEQUENCE

Heaters patches are provided with a self-adhesive side.

01 Clean the areas dedicated to heaters with isopropyl alcohol and wait for complete evaporation.
Always use gloves (no latex, but cotton gloves)

02 Make a dry test, positioning the heaters in the foreseen position, marking with a pen the corners and some reference points to help during the gluing phase

03 Remove the protection paper from the heaters and bond it on the structure surface with care.
During this operation, avoid trapping air bubbles.
Start from one of the short edge, gluing from that edge towards the opposite one

04 Fix the corners of the heaters, the cables area and the 4 edges (one drop every 3-5 cm) with drops of EC 2216 A/B adhesive (see following example image).

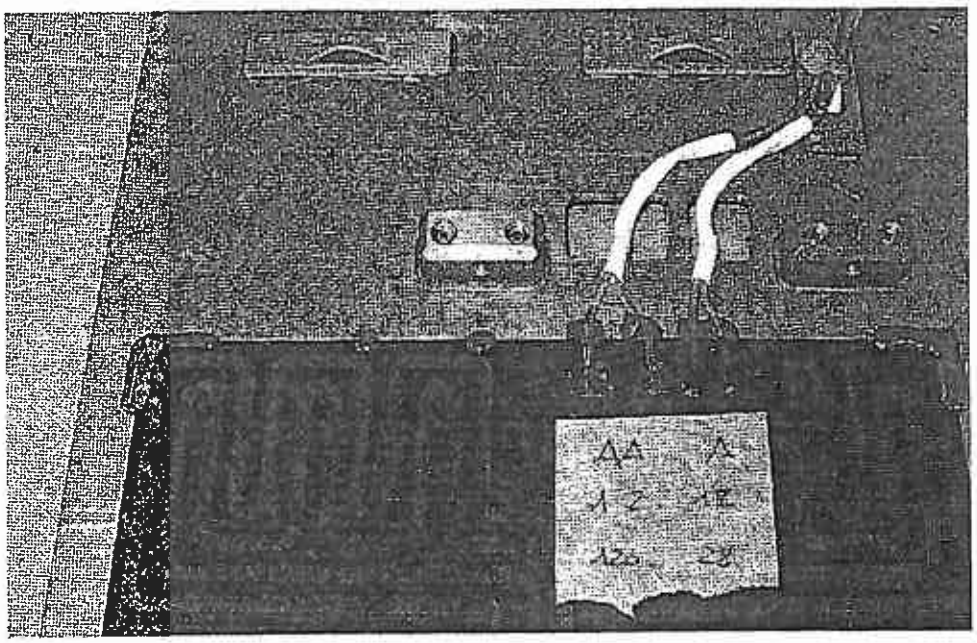

Figure 6-6: heaters gluing example

05 Wait for curing time according to supplier data sheet

Questo documento contiene informazioni di proprietà di CARLO GAVAZZI SPACE SpA. Tutti i diritti sono riservati.
All information contained in this document are property of CARLO GAVAZZI SPACE SpA. All right reserved.

6.3 LABELLING

Each heater has two twisted pairs cables, and therefore has 4 flying leads.

Each flying lead shall be equipped with a label, in order to uniquely identify it. The labelling scheme shall be as follows:

Label content: **XX-Y-z**

Where:
XX is a code identifying the heater, according to the following table:

XX	Description	Position w.r.t. AMS & RICH axis
RS	Ram-Starboard side heater	–X –Y
ST	Starboard side heater	–X
WS	Wake-Starboard side heater	–X+Y
WA	Wake side heater	+Y
WP	Wake-Port side heater	+X+Y
PO	Port side heater	+X
RP	Ram-Port side heater	+X–Y
RA	Ram side heater	–Y

Y indicates the bus, and its values are **A** or **B**.
The cables belonging to the same twisted pair shall have the same bus letter.
The choice of which twisted pair is **A** or **B** is arbitrary, being the two circuits equivalent.

z serves to discriminate the wires in each twisted pair, and takes the two values **p** and **m**. Once again, the choice of which flying lead is **p** or **m** is arbitrary, being the circuit a simple electrical resistance.

An example of the label names for an heater is given in the figure below.

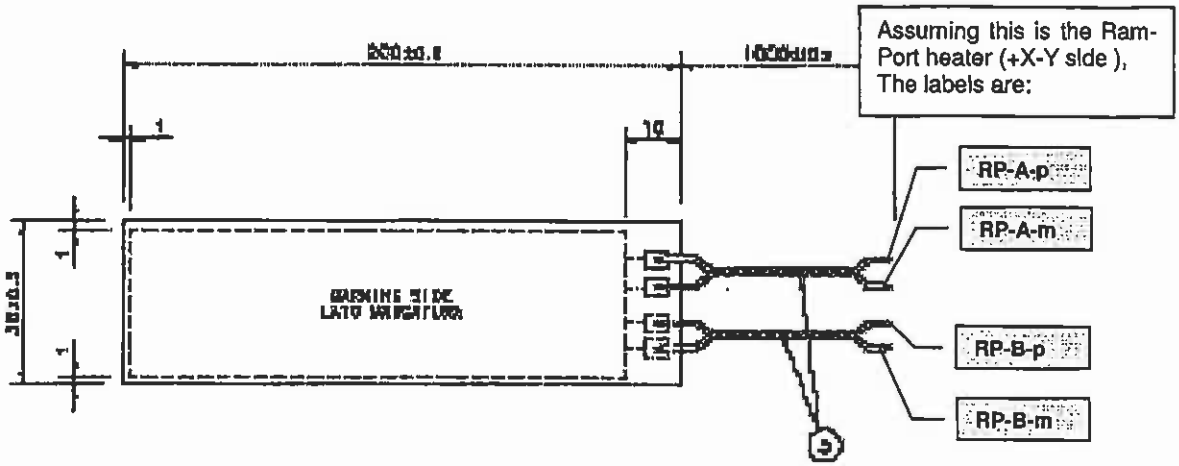

Figure 6-7: Example of labels content for an heater (specifically, the Ram-Port one)

The labels complete list is as follows:

Questo documento contiene informazioni di proprietà di CARLO GAVAZZI SPACE SpA. Tutti i diritti sono riservati.
All information contained in this document are property of CARLO GAVAZZI SPACE SpA. All right reserved.

#	LABEL	ECAL Side	Bus (twisted pair)	polarity
1	RS-A-p	RAM-STARBOARD	A	+
2	RS-A-m	RAM-STARBOARD	A	-
3	RS-B-p	RAM-STARBOARD	B	+
4	RS-B-m	RAM-STARBOARD	B	-
5	ST-A-p	STARBOARD	A	+
6	ST-A-m	STARBOARD	A	-
7	ST-B-p	STARBOARD	B	+
8	ST-B-m	STARBOARD	B	-
9	WS-A-p	WAKE-STARBOARD	A	+
10	WS-A-m	WAKE-STARBOARD	A	-
11	WS-B-p	WAKE-STARBOARD	B	+
12	WS-B-m	WAKE-STARBOARD	B	-
13	WA-A-p	WAKE	A	+
14	WA-A-m	WAKE	A	-
15	WA-B-p	WAKE	B	+
16	WA-B-m	WAKE	B	-
17	WP-A-p	WAKE-PORT	A	+
18	WP-A-m	WAKE-PORT	A	-
19	WP-B-p	WAKE-PORT	B	+
20	WP-B-m	WAKE-PORT	B	-
21	PO-A-p	PORT	A	+
22	PO-A-m	PORT	A	-
23	PO-B-p	PORT	B	+
24	PO-B-m	PORT	B	-
25	RP-A-p	RAM-PORT	A	+
26	RP-A-m	RAM-PORT	A	-
27	RP-B-p	RAM-PORT	B	+
28	RP-B-m	RAM-PORT	B	-
29	RA-A-p	RAM	A	+
30	RA-A-m	RAM	A	-
31	RA-B-p	RAM	B	+
32	RA-B-m	RAM	B	-

6.4 LABELLING SEQUENCE

Labels shall be made of Kapton tape.

Labels shall serve to identify the flying leads, by are not flight hardware.
Therefore, the labels must be removed before final installation by the AMS integrator responsible.

As a consequence, the labels can be realized with a folded Kapton tape, containing a piece of paper.
The label shall be hand-written on the paper. The Kapton tape shall be folded over the paper on both sides, enveloping it. The non-perfectly overlapped kapton rims shall be cut. **Particular care shall be paid not to damage the wire.**

Consider the next scheme as a reference:

Questo documento contiene informazioni di proprietà di CARLO GAVAZZI SPACE SpA. Tutti i diritti sono riservati
All information contained in this document are property of CARLO GAVAZZI SPACE SpA. All right reserved.

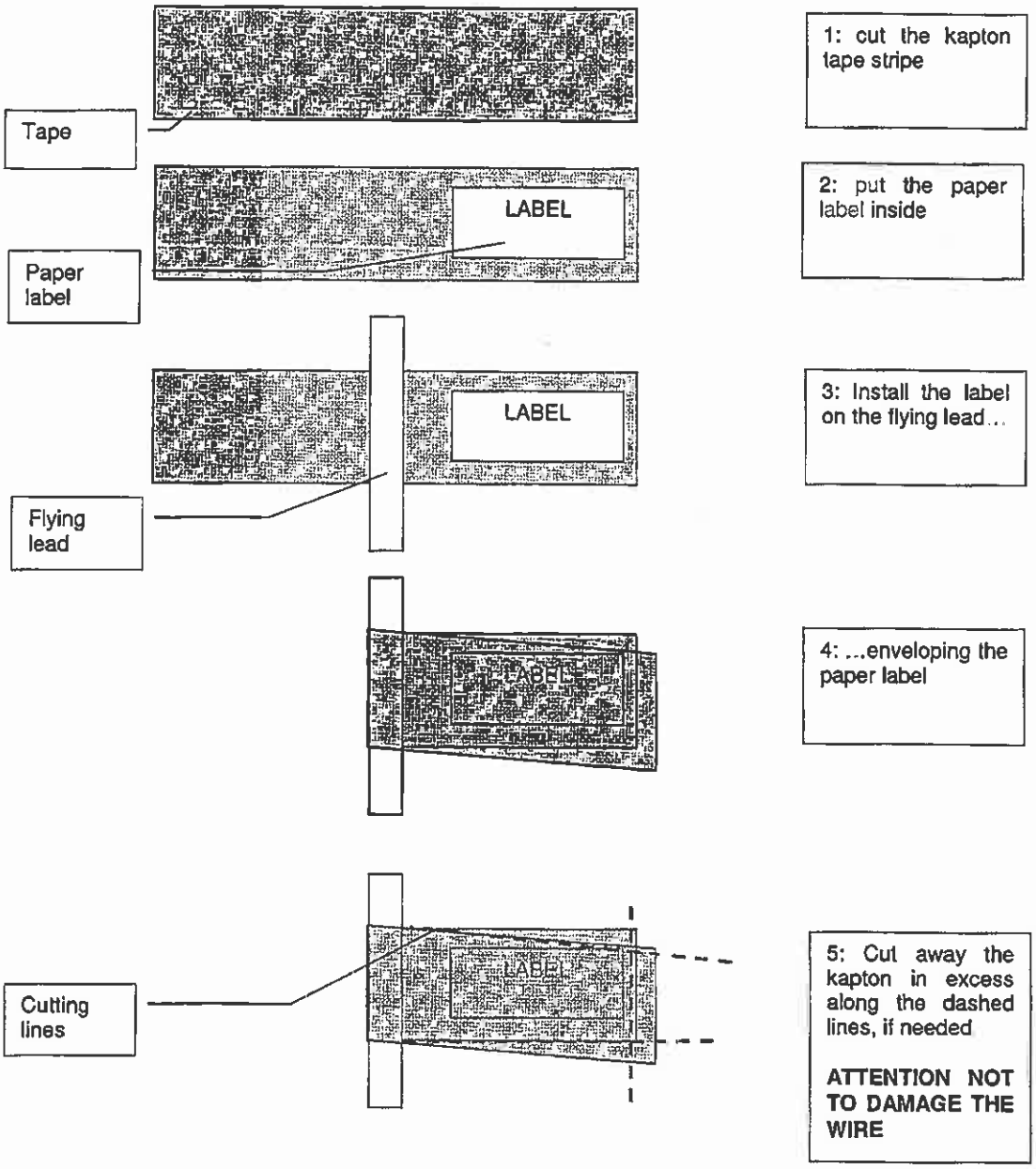

*Figure 6-8: Labeling sequence (not flight labels, **remove before flight!**)*

Questo documento contiene informazioni di proprietà di CARLO GAVAZZI SPACE SpA Tutti I diritti sono riservati
All information contained in this document are property of CARLO GAVAZZI SPACE SpA. All right reserved.

7. THERMOSTATS INTEGRATION

7.1 INTEGRATION POSITION

The eight thermostats are mounted on the internal part of the triangular beams, as shown in the following figures. Each thermostats (in each pair) controls 2 heaters in parallel (see figure 5-1). The 2 patches controlled by the heater are the one close to the corner where thermostat is attached.

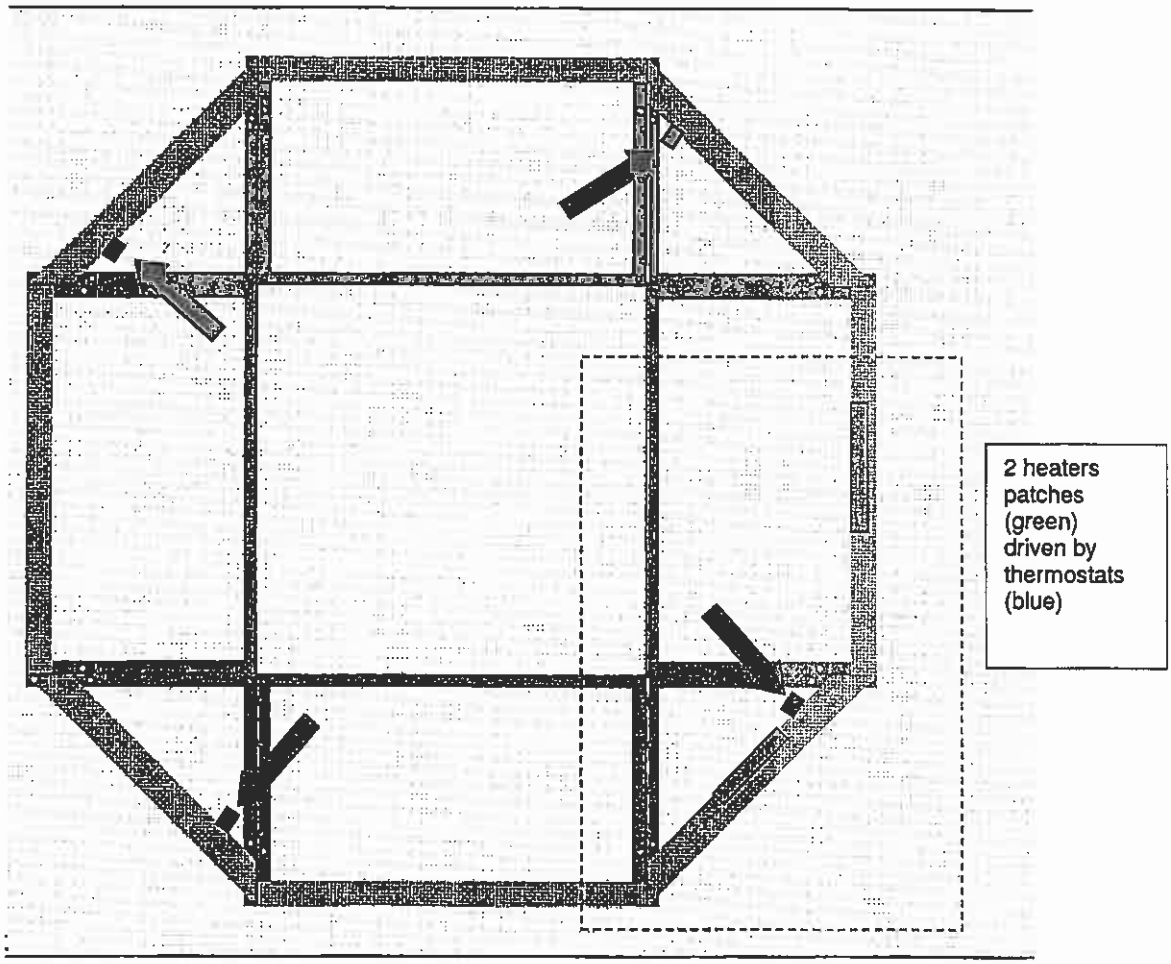

Figure 7-1: In blue, thermostats location (highlighted by red arrows). Thermostats in each location drive the 2 adjacent heaters (shown in one corner only, in green)

The following image shows the location of a couple of thermostats (one for bus A and one for bus B) controlling two heater patches at one corner: The other 3 locations can be obtained by simple rotation of the following figure by 90° steps

Questo documento contiene informazioni di proprietà di CARLO GAVAZZI SPACE SpA: Tutti i diritti sono riservati
All information contained in this document are property of CARLO GAVAZZI SPACE SpA. All right reserved.

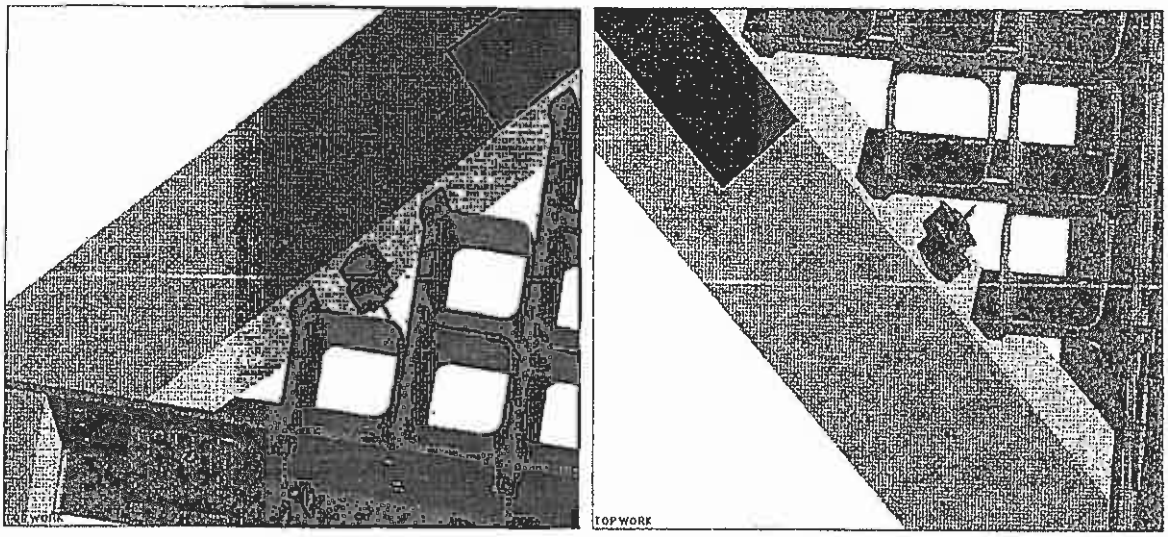

Figure 7-2: *Rich thermostat location (detail, seen from top)*

Questo documento contiene informazioni di proprietà di CARLO GAVAZZI SPACE SpA. Tutti i diritti sono riservati.
All information contained in this document are property of CARLO GAVAZZI SPACE SpA. All right reserved.

7.2 GLUING SEQUENCE

01 Clean the areas dedicated to thermostats (and the thermostats itself) with isopropyl alcohol and wait for complete evaporation. Always use gloves

02 Mask the areas dedicated to the thermostats using a Kapton tape

03 Grind the thermostat base and the thermostat area dedicated to the gluing with sand paper 600; clean after grinding with isopropyl alcohol and wait for complete evaporation.

04 Put a proper quantity of ECCOBOND 285 on both thermostats and area where it has to be glued.

05 Apply an extra quantity of glue all around the thermostat in order to make a meniscus between the thermostat and the gluing surface (see following example image).

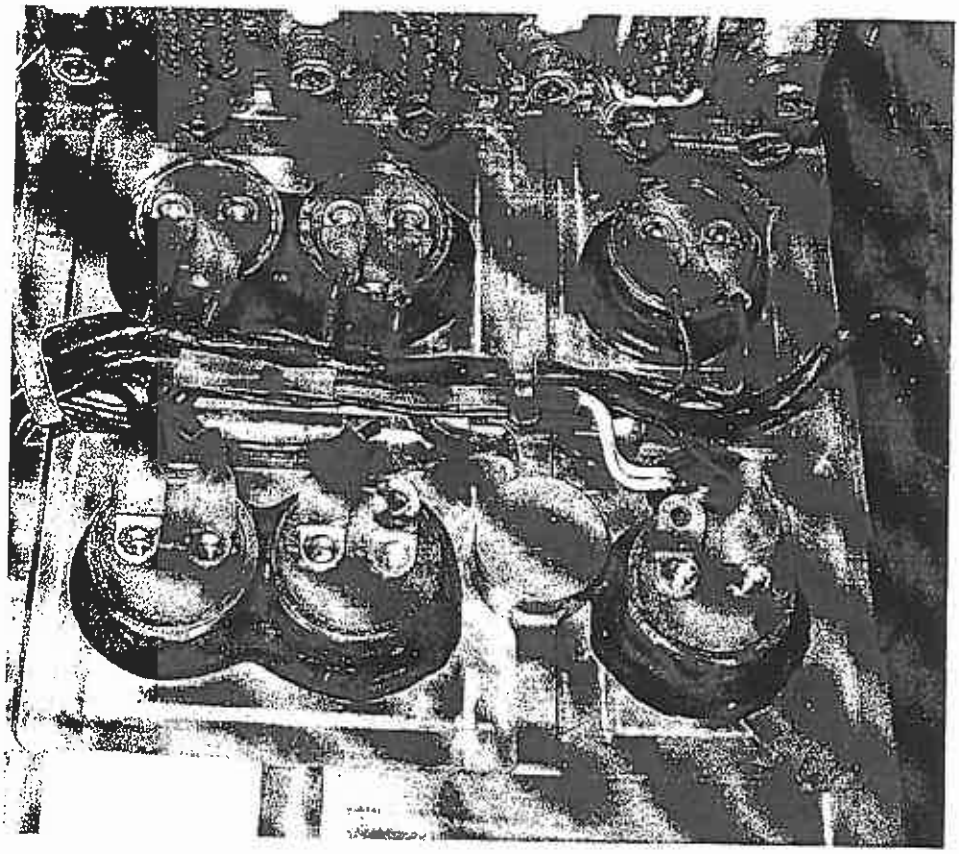

Figure 7-3: thermostats gluing example

06 Wait for curing time according to supplier data sheet

Questo documento contiene informazioni di proprietà di CARLO GAVAZZI SPACE SpA Tutti I diritti sono riservati
All information contained in this document are property of CARLO GAVAZZI SPACE SpA. All right reserved.