CARLO GAVAZZI

CARLO GAVAZZI SPACE SpA

0

RICH SYSTEM

Engineering Change Order

1 ECO ref

Doc N°: ECO-00013

Date: 24/07/07

Page 1 of 1 attach. A

2 DRAWING N° / REV. / TITLE:

10-RICSYS-00.006 Rev / - Rich System SPACER RICH-USS

3 SHEETS AFFECTED:

1/1

4 PREPARED BY:

A.ASSENZA

5 ORIGIN:

N.A.

6 REASON FOR REVISION:

INTEGRATION

7 CHANGE DESCRIPTION:

REDUCED THICKNESS FOR SPACERS in order to void interferences with instruments

WAS : 8.9 ± 0.1mm

IS : 4.5 ± 0.1mm

8 OTHER DRAWINGS AFFECTED:

C.C.B. DISPOSITION:

9	10 CLASS:	11 Eng.	12 P.A.	13 C.C.	14 Date
Approved ☒ Rejected ☐	3	M. OLIVIER 24/07/07	24.07.07	C. CINQUEPALMI	24/07/07

All information contained in this document are property of CARLO GAVAZZI SPACE SpA. All rights reserved

WA3

ECD-00013
ANNEX#A

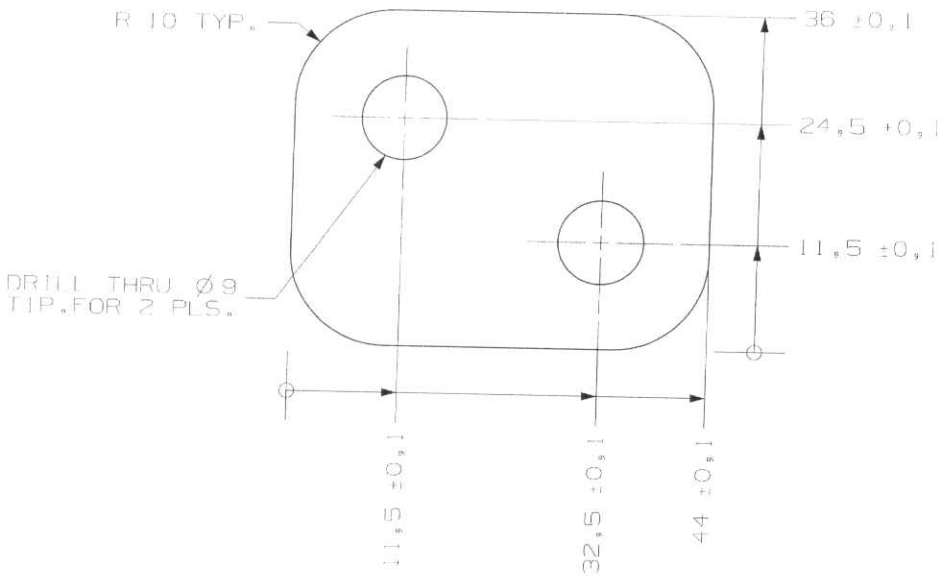

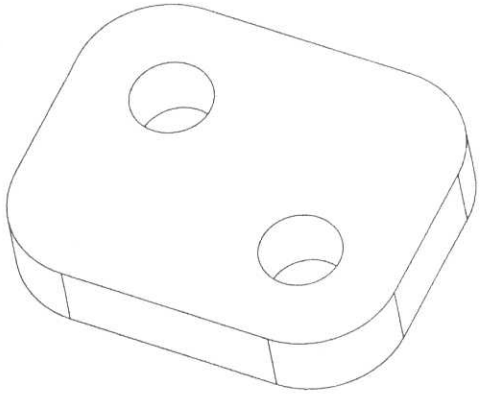

3D OVERVIEW

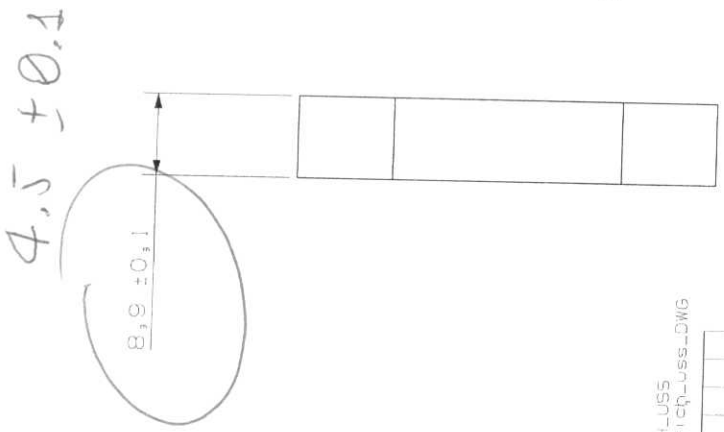

NOTE:
1. MATERIAL: ALLUMINIO ALLOY 7075 T7351 SPEC QQ A-250/12
2. NDI PER ASTM-E 1417, TYPE 1,METHOD A, SENSITIVITY LEVEL 3 SHALL BE PERFORMED
3. SURFACE TREATMENT: ALODINE PER MIL-C-5541, CLASS 3, TYPE 2. 1200. GOLD
4. REMOVE BURRS AND BREAK SHARP EDGES WITH CHAMFER OF 0.3x45°, ACCORDING TO DIN 6784

FILE MODEL: spacerRICH_USS
FILE DRAWING: spacer_rich_uss_DWG

REV	DRAWN	DATE	MEC CHECK	DATE	EL CHECK	DATE	SYST ENG	DATE	PA	DATE	CoC	DATE	CHANGE AUTHORITY
/	8/7/04				N.A.								

UNLESS OTHERWISE SPECIFIED DIMENSIONS AND TOLERANCES ARE IN mm

IDENTIFICATION MARKING PER

CARLO GAVAZZI SPACE

DRAWING TITLE

RICH SYSTEM
SPACER RICH-USS

SCALE 2:1

PROJECTION

GEN.TOLERANCES PER ISO 2768-m

SPECIAL RA.

GEN.RA. 3.2

CARLO GAVAZZI

DASH NUMBER	NEXT ASSY
-01	10-RICSYS-00.006

APPLICATION

SIZE A3

CAGE CODE

DRAWING NUMBER 10-RICSYS-00.006

REV /

SHEET 1 OF 1

THIS IS A CAD DRAWING NO MANUAL ALTERATION

ALL RIGHTS RESERVED - COPYRIGHT ACC. TO DIN 34