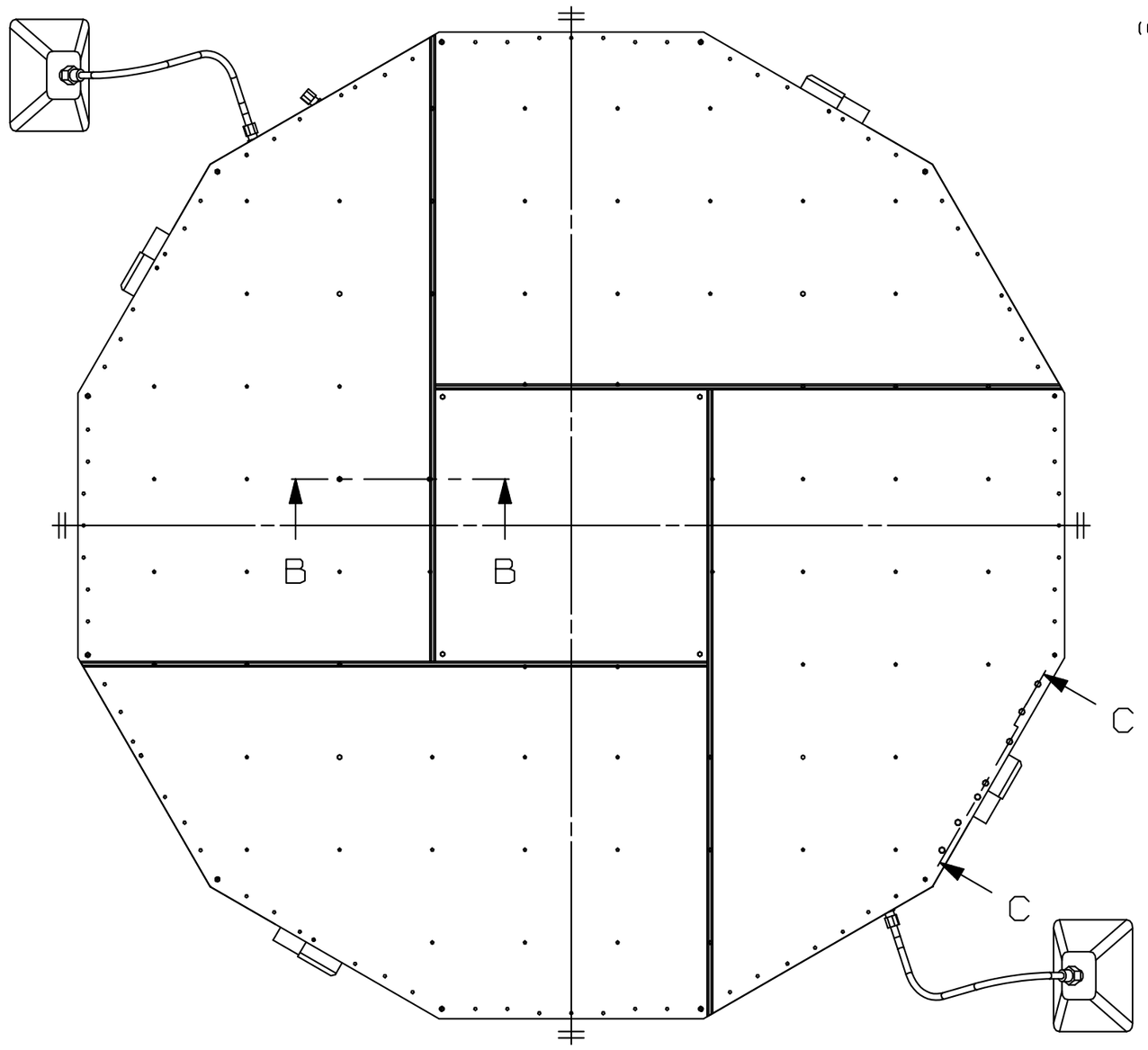

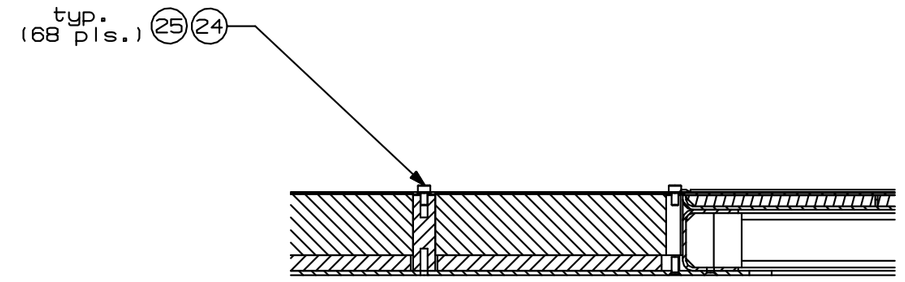

SECTION B-B
SCALE 1:2

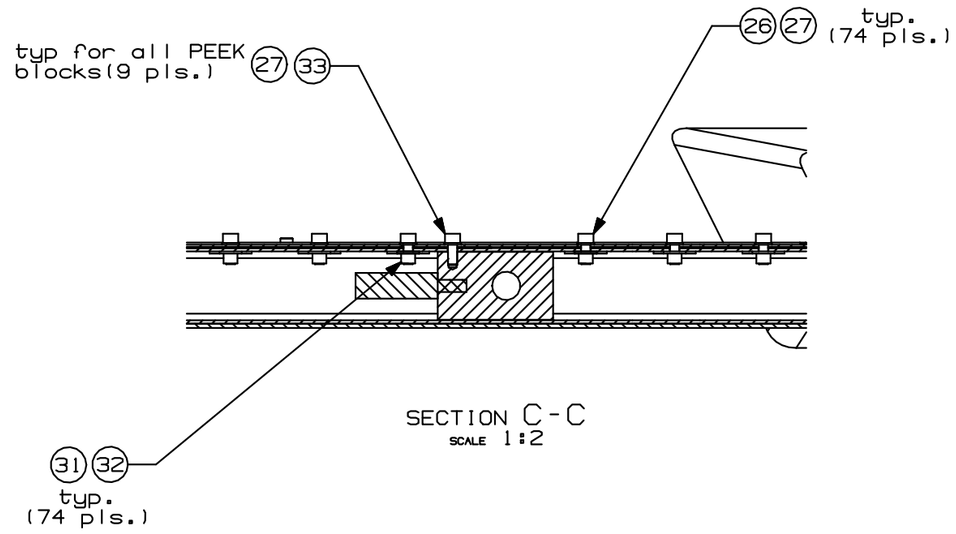

SECTION C-C
SCALE 1:2

FILE MODEL:aerogel_supp_assy_V2_revA
FILE DRAWING:11-RICSYS-10.000_revA_dwg

REV	DRAWN	DATE	MEC CHECK	DATE	EL CHECK	DATE	SYST ENG	DATE	PA	DATE	CoC	DATE	CHANGE AUTHORITY
A	G.S.	02/05/2006											ECO-00012
/		16/07/2004											

UNLESS OTHERWISE SPECIFIED DIMENSIONS AND TOLERANCES ARE IN mm

IDENTIFICATION MARKING PER

CARLO GAVAZZI SPACE

DRAWING TITLE
RICH SYSTEM
AEROGEL ASSY

SCALE 1:5
PROJECTION
GEN.TOLERANCES PER ISO 2768-
SPECIAL RA. NA GEN.RA.

CARLO GAVAZZI

DASH NUMBER	NEXT ASSY
-01	10-RICSYS-00.000

APPLICATION

SIZE A2 | CAGE CODE | DRAWING NUMBER 11-RICSYS-10.000 | REV / | SHEET 2 OF 3

THIS IS A CAD DRAWING NO MANUAL ALTERATION

ALL RIGHTS RESERVED - COPYRIGHT ACC. TO DIN 34