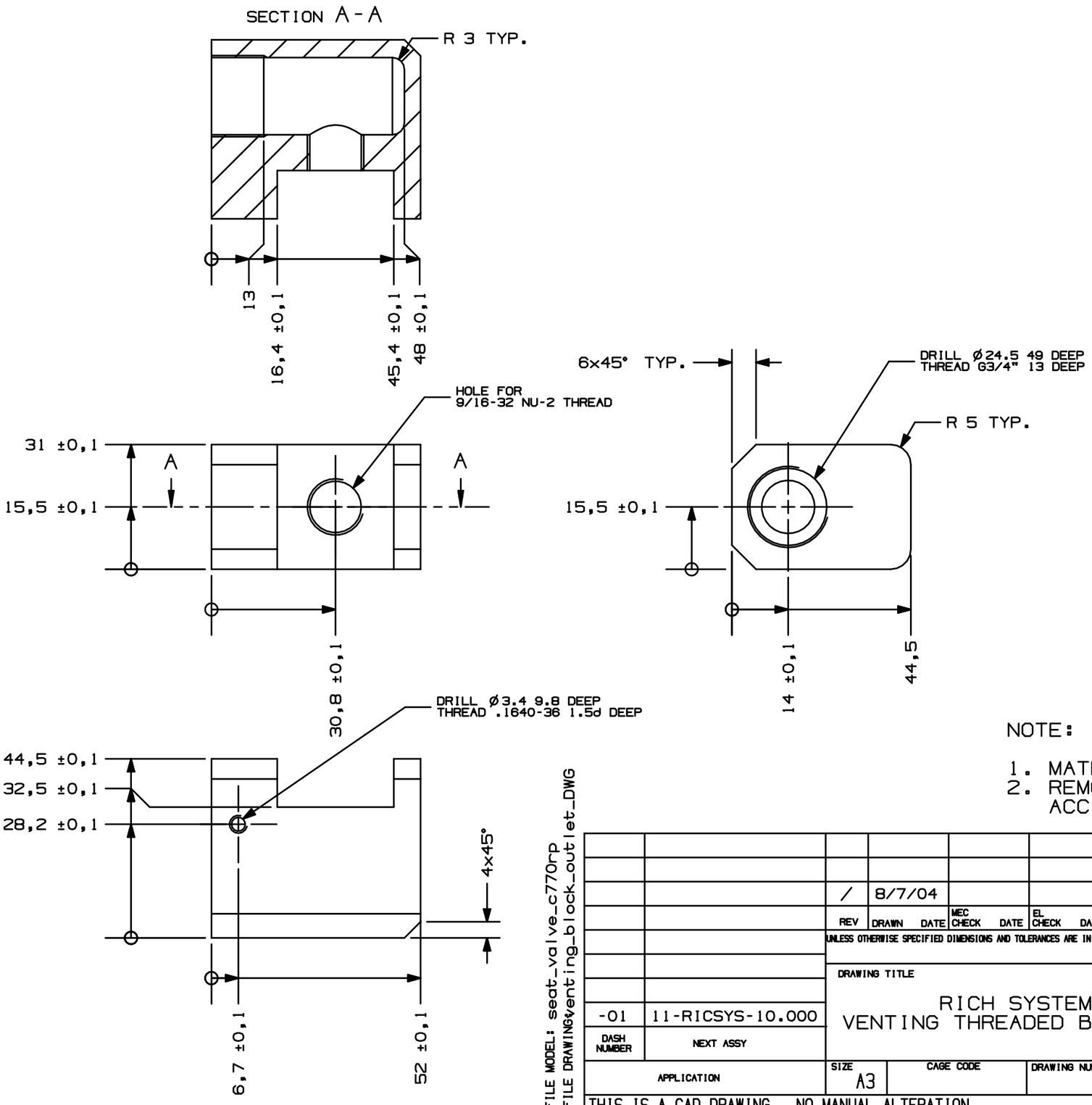

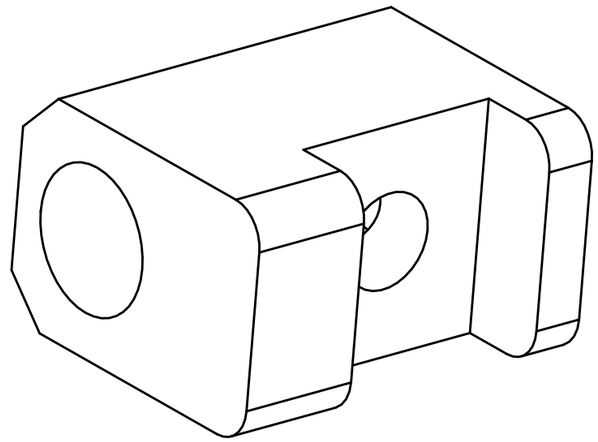

3D OVERVIEW NOT IN SCALE

NOTE:

1. MATERIAL: KETRON-PEEK-1000
2. REMOVE BURRS AND BREAK SHARP EDGES ACC. TO DIN 6784

FILE MODEL: seat_valve_c770rp
FILE DRAWING: venting_block_outlet_DWG

REV	DRAWN	DATE	MEC CHECK	DATE	EL CHECK	DATE	SYST ENG	DATE	PA	DATE	CoC	DATE	CHANGE AUTHORITY
/		8/7/04											

UNLESS OTHERWISE SPECIFIED DIMENSIONS AND TOLERANCES ARE IN mm

IDENTIFICATION MARKING PER

CARLO GAVAZZI SPACE

DRAWING TITLE

RICH SYSTEM
VENTING THREADED BLOCK OUTLET

SCALE 1 : 1

PROJECTION

GEN. TOLERANCES PER ISO 2768- m

SPECIAL RA. √ √ √

GEN. RA. 3.2 √

CARLO GAVAZZI

DASH NUMBER	NEXT ASSY
-01	11-RICSYS-10.000

APPLICATION

SIZE A3

CAGE CODE

DRAWING NUMBER 11-RICSYS-10.002

REV /

SHEET 1 OF 1

THIS IS A CAD DRAWING NO MANUAL ALTERATION

ALL RIGHTS RESERVED - COPYRIGHT ACC. TO DIN 34