CARLO GAVAZZI SPACE SpA	0 RICH SYSTEM Engineering Change Order	1 ECO ref	Doc N°: **ECO-00011** Date: **24.10.05** Page **1** of **1** attach. **A**

2 **DRAWING N° / REV. / TITLE:**
11-RICSYS-10.002 Rev / - Rich System VENTING THREADED BLOCK OUTLET

3 **SHEETS AFFECTED:**
2/2

4 **PREPARED BY:**
G. SARDO

5 **ORIGIN:**
N.A.

6 **REASON FOR REVISION:** DESIGN IMPROVEMENT

BLOCK HEIGHT, HOLES POSITIONING AND THERAD

7 **CHANGE DESCRIPTION:**

WAS

1) Block height was 31.0mm
2) Holes 9/16-32NU-2 and GAS ¾ inch were at height 15.5 mm
3) Hole in D1 was " DRILL DIAMETER 3.4 9.8DEEP – THREAD .1640-36 1.5d DEEP"
4) Holes GAS ¾ inch horizontal position in C3 was 14 mm
5) Hole in B3 was " DRILL DIAMETER 24.5 49 DEEP – THREAD GAS ¾ inch 13 DEEP"

IS

6) Block height now is 30.6 mm
7) Holes 9/16-32NU-2 and GAS ¾ inch now are centred and thus height position is 15.3 mm
8) Hole in D1 now is " THREAD .1640-36 1.5d Deep"
9) Holes GAS ¾ inch horizontal position in C3 now is 16 mm
10) Hole in B3 now is " DRILL DIAMETER 23 48 DEEP – THREAD GAS ¾ inch 15 DEEP"

8 **OTHER DRAWINGS AFFECTED:**

AEROGEL ASSY D/N: 11-RICSYS-10.000 REV. /

C.C.B. DISPOSITION:

9	10 CLASS:	11 Eng. 24/10/05	12 P.A.	13 C.C.	14 Date
Approved ☒ Rejected ☐	3				24/10/05

All information contained in this document are property of CARLO GAVAZZI SPACE SpA. All rights reserved

WAS ATTACH. A 1/2 to ECO 00011

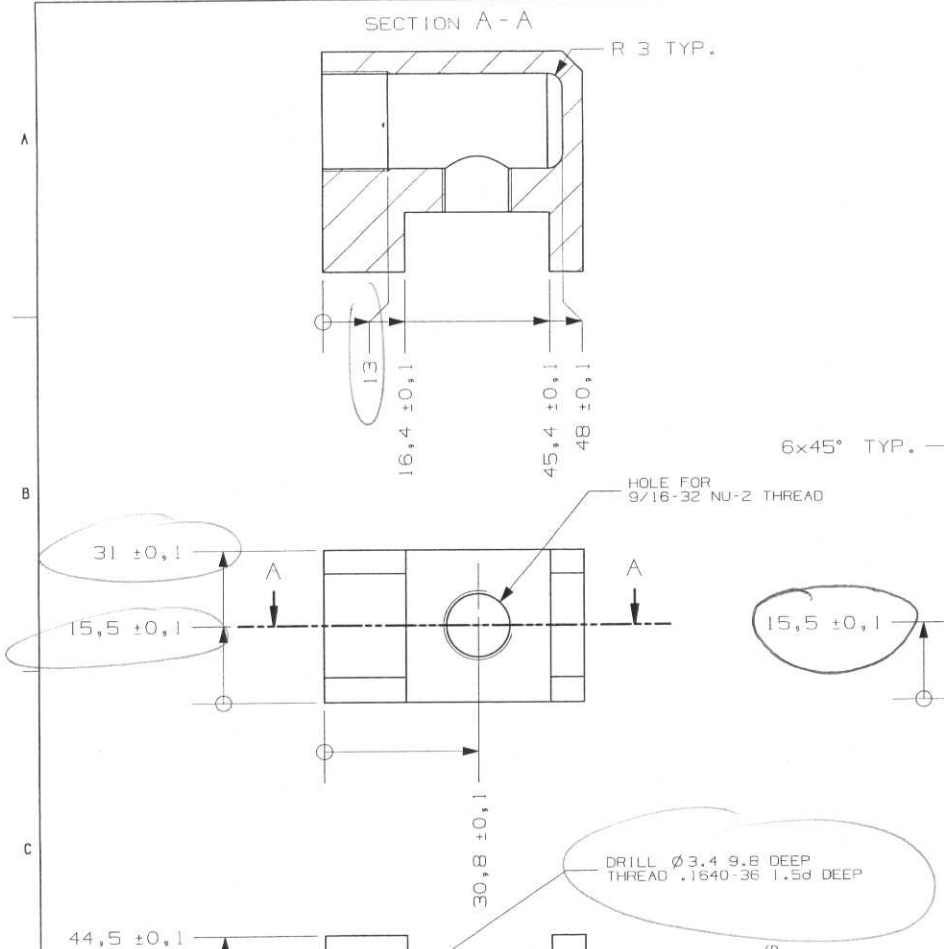

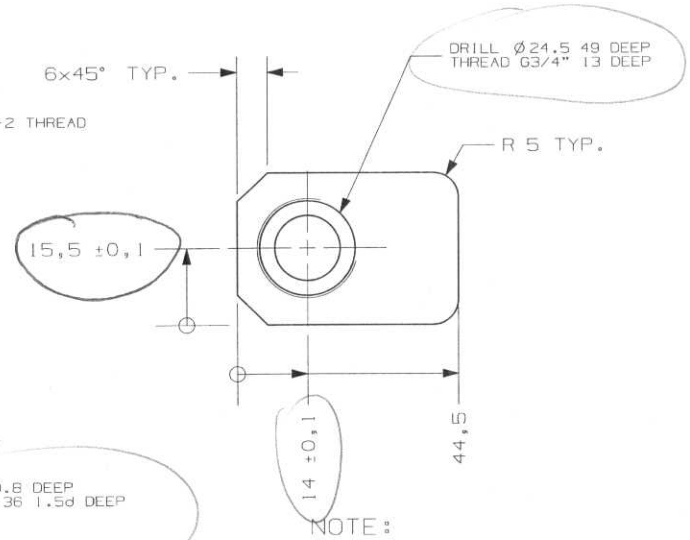

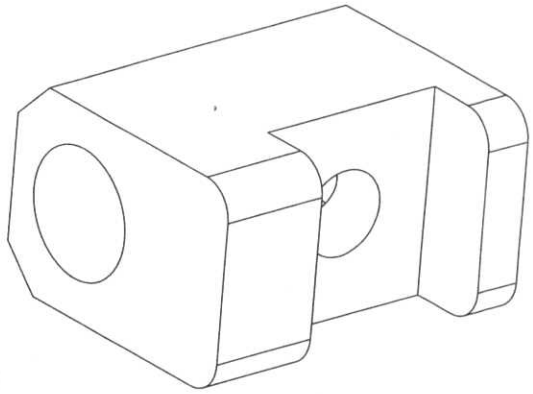

3D OVERVIEW NOT IN SCALE

NOTE:

1. MATERIAL: KETRON-PEEK-1000, 30% GLASS FIBER FILLED
2. REMOVE BURRS AND BREAK SHARP EDGES ACC. TO DIN 6784

FILE MODEL: seat_valve_c770rp
FILE DRAWING: venting_block_outlet_DWG

REV	DRAWN	DATE	MEC CHECK	DATE	EL CHECK	DATE	SYST ENG	DATE	PA	DATE	CoC	DATE	CHANGE AUTHORITY
/		8/7/04			N.A.								

UNLESS OTHERWISE SPECIFIED DIMENSIONS AND TOLERANCES ARE IN mm

IDENTIFICATION MARKING PER

CARLO GAVAZZI SPACE

DRAWING TITLE

RICH SYSTEM
VENTING THREADED BLOCK OUTLET

SCALE 1 : 1

PROJECTION

GEN. TOLERANCES PER ISO 2768- m

SPECIAL RA. / GEN. RA. 3.2

CARLO GAVAZZI

DASH NUMBER	NEXT ASSY
-01	11-RICSYS-10.000

APPLICATION

SIZE A3 | CAGE CODE | DRAWING NUMBER 11-RICSYS-10.002 | REV / | SHEET 1 OF 1

THIS IS A CAD DRAWING NO MANUAL ALTERATION

ALL RIGHTS RESERVED - COPYRIGHT ACC. TO DIN 34

15

ATTACH. 1 2/2 TO ECO 00011

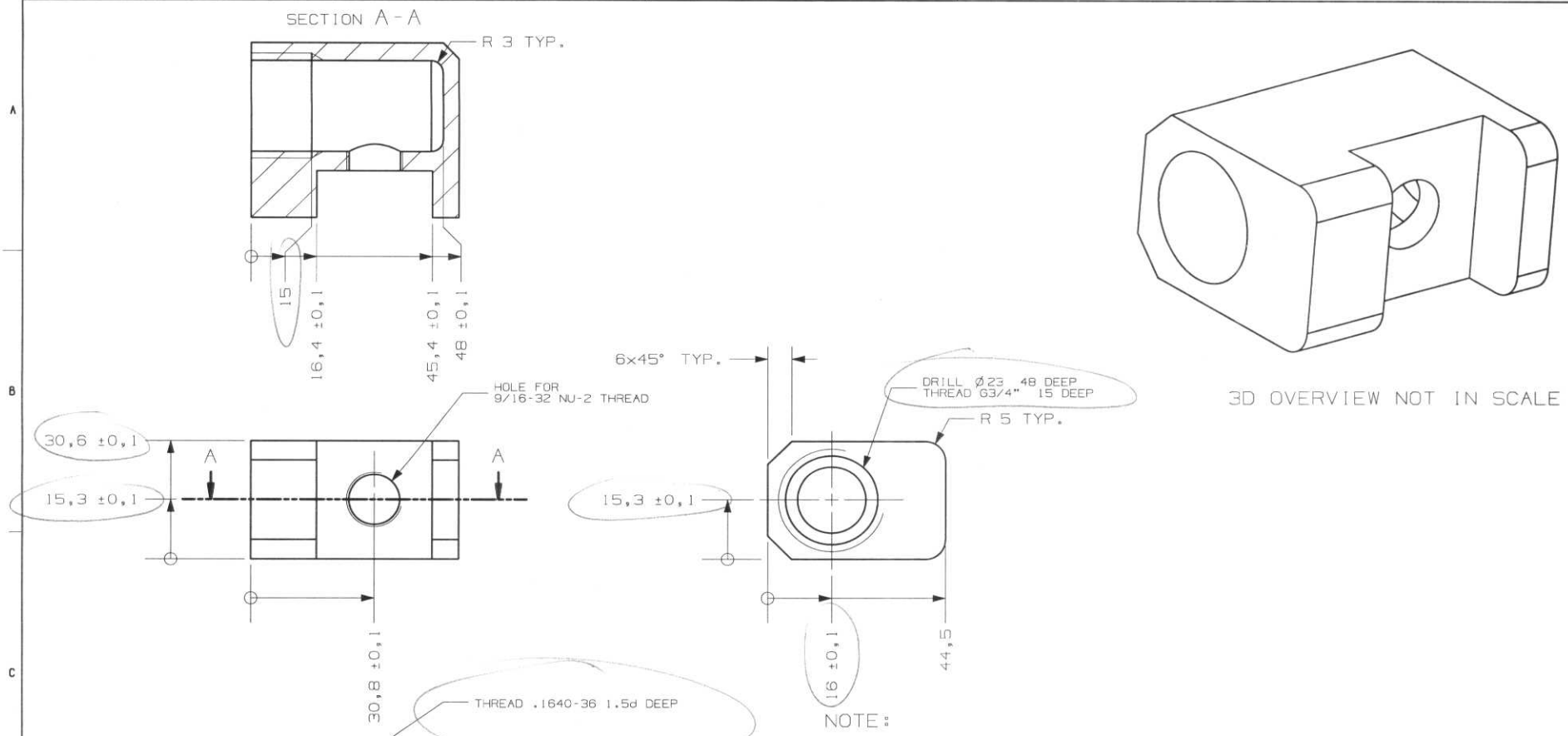

3D OVERVIEW NOT IN SCALE

NOTE:

1. MATERIAL: KETRON-PEEK-1000, 30% GLASS FIBER FILLED
2. REMOVE BURRS AND BREAK SHARP EDGES ACC. TO DIN 6784

FILE MODEL: seat_valve_c770rp
FILE DRAWING: venting_block_outlet_DWG

REV	DRAWN	DATE	MEC CHECK	DATE	EL CHECK	DATE	SYST ENG	DATE	PA	DATE	CoC	DATE	CHANGE AUTHORITY
A	G. SARDO	24/10/05											ECO 00011
/		8/7/04											

UNLESS OTHERWISE SPECIFIED DIMENSIONS AND TOLERANCES ARE IN mm

IDENTIFICATION MARKING PER

CARLO GAVAZZI SPACE

DRAWING TITLE

RICH SYSTEM
VENTING THREADED BLOCK OUTLET

SCALE 1 : 1

PROJECTION

GEN. TOLERANCES PER ISO 2768- m

SPECIAL RA.

GEN. RA. 3.2

CARLO GAVAZZI

DASH NUMBER	NEXT ASSY
-01	11-RICSYS-10.000

APPLICATION

SIZE A3 | CAGE CODE | DRAWING NUMBER 11-RICSYS-10.002 | REV / | SHEET 1 OF 1

THIS IS A CAD DRAWING NO MANUAL ALTERATION

ALL RIGHTS RESERVED - COPYRIGHT ACC. TO DIN 34