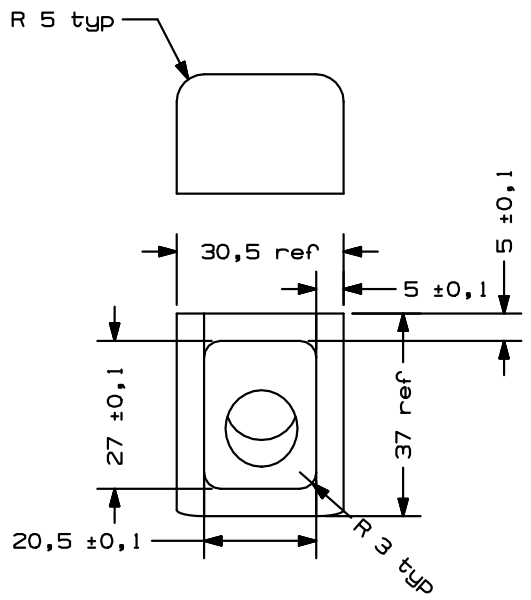

AUXILIARY VIEWS

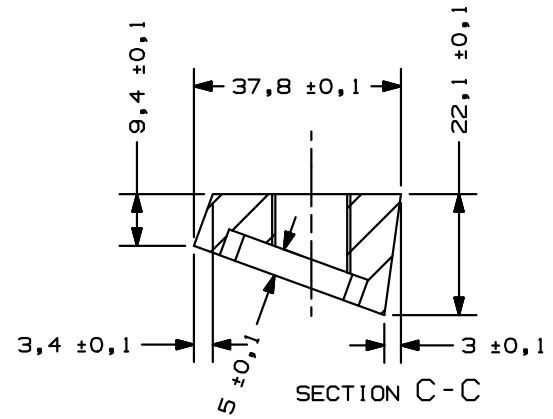

SECTION C-C

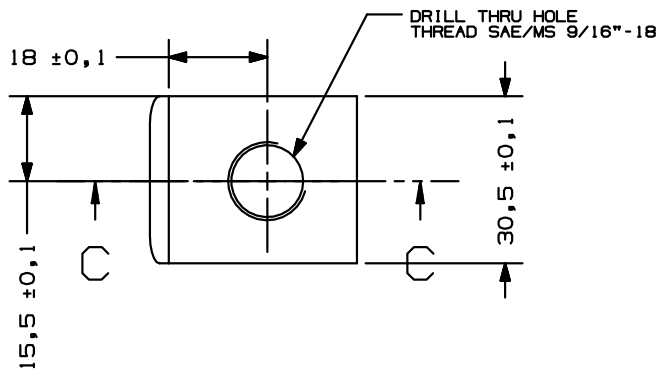

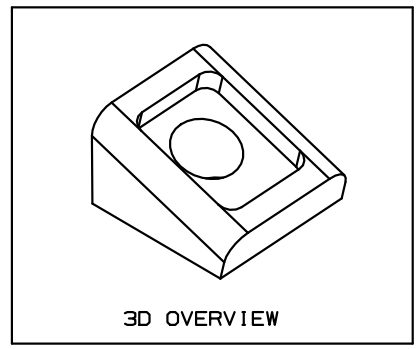

NOTE:

1. MATERIAL: KETRON-PEEK-1000, 30% GLASS FIBER FILLED
2. REMOVE BURRS AND BREAK SHARP EDGES ACC. TO DIN 6784

FILE MODEL: nitrogen_threaded_block
FILE DRAWING: nitrogen_threaded_block_dwg

REV	DRAWN	DATE	MEC CHECK	DATE	EL CHECK	DATE	SYST ENG	DATE	PA	DATE	CoC	DATE	CHANGE AUTHORITY
/	G.S.	02/05/06											

UNLESS OTHERWISE SPECIFIED DIMENSIONS AND TOLERANCES ARE IN mm

IDENTIFICATION MARKING PER

CARLO GAVAZZI SPACE

DRAWING TITLE

RICH SYSTEM
NITROGEN THREADED BLOCK

SCALE 1 : 1

PROJECTION

GEN.TOLERANCES PER ISO 2768- m

SPECIAL RA.

GEN.RA. 3.2

CARLO GAVAZZI

DASH NUMBER	NEXT ASSY
-01	11-RICSYS-10.000

APPLICATION

SIZE A3

CAGE CODE

DRAWING NUMBER 11-RICSYS-10.003

REV /

SHEET 1 OF 1

THIS IS A CAD DRAWING NO MANUAL ALTERATION

ALL RIGHTS RESERVED - COPYRIGHT ACC. TO DIN 34