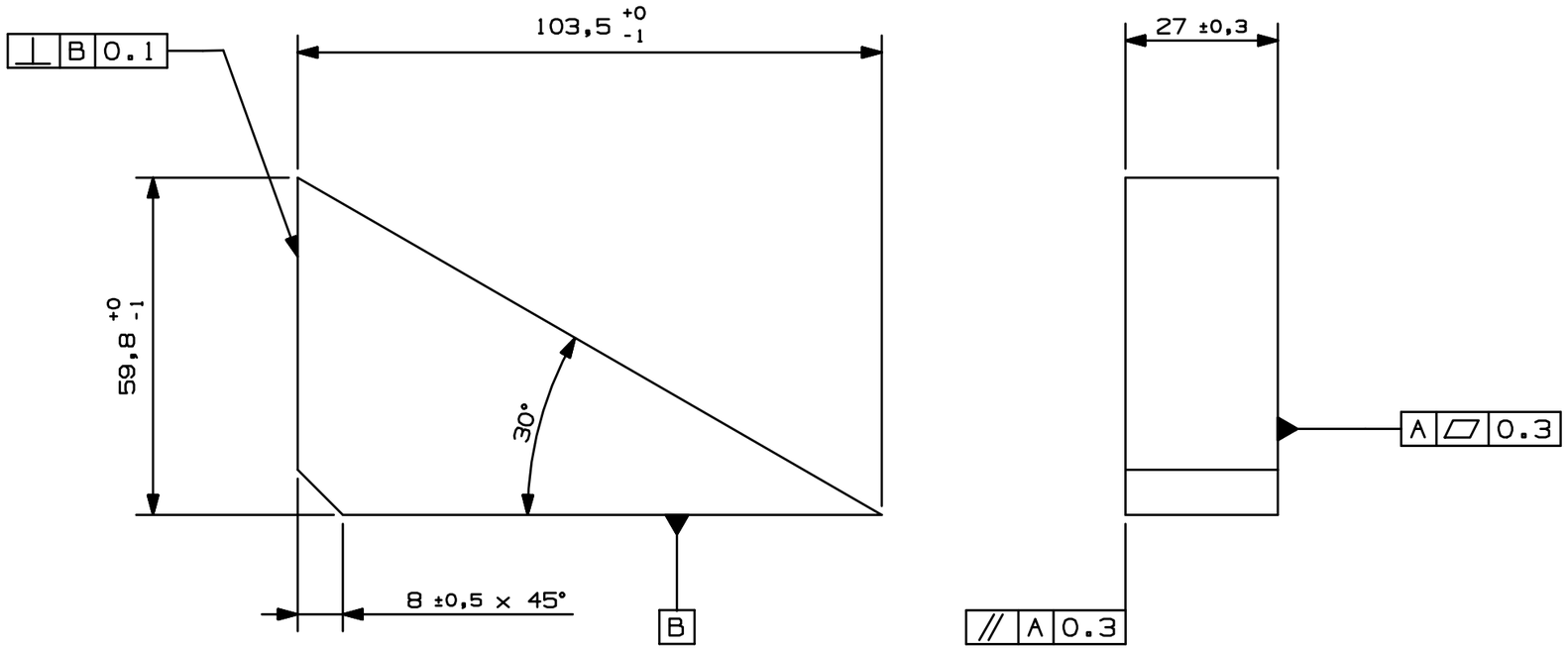

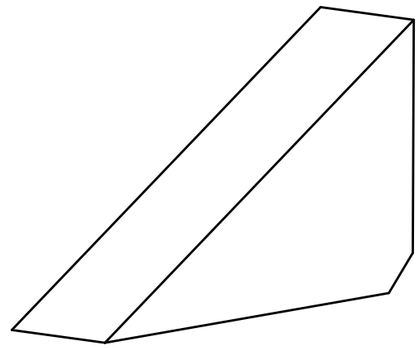

NOTE
1. MATERIAL: SILICA AEROGEL

		/	G. SARDO 13/07/2004						
		REV	DRAWN DATE	MEC CHECK DATE	EL CHECK DATE	SYST ENG DATE	PA DATE	CoC DATE	CHANGE AUTHORITY

UNLESS OTHERWISE SPECIFIED DIMENSIONS AND TOLERANCES ARE IN mm

IDENTIFICATION MARKING PER

CARLO GAVAZZI SPACE

DRAWING TITLE

RICH SYSTEM
AEROGEL TILE 3

SCALE 1 : 1

PROJECTION

GEN.TOLERANCES PER ISO 2768-m

SPECIAL RA. √ √ √

GEN.RA. 3.2

CARLO GAVAZZI

DASH NUMBER	NEXT ASSY
-01	11-RICSYS-10.000

APPLICATION

SIZE A3 | CAGE CODE | DRAWING NUMBER 11-RICSYS-10.009 | REV / | SHEET 1 OF 1

FILE MODEL: tile_3
FILE DRAWING: tile_3_dwg

THIS IS A CAD DRAWING NO MANUAL ALTERATION

ALL RIGHTS RESERVED - COPYRIGHT ACC. TO DIN 34