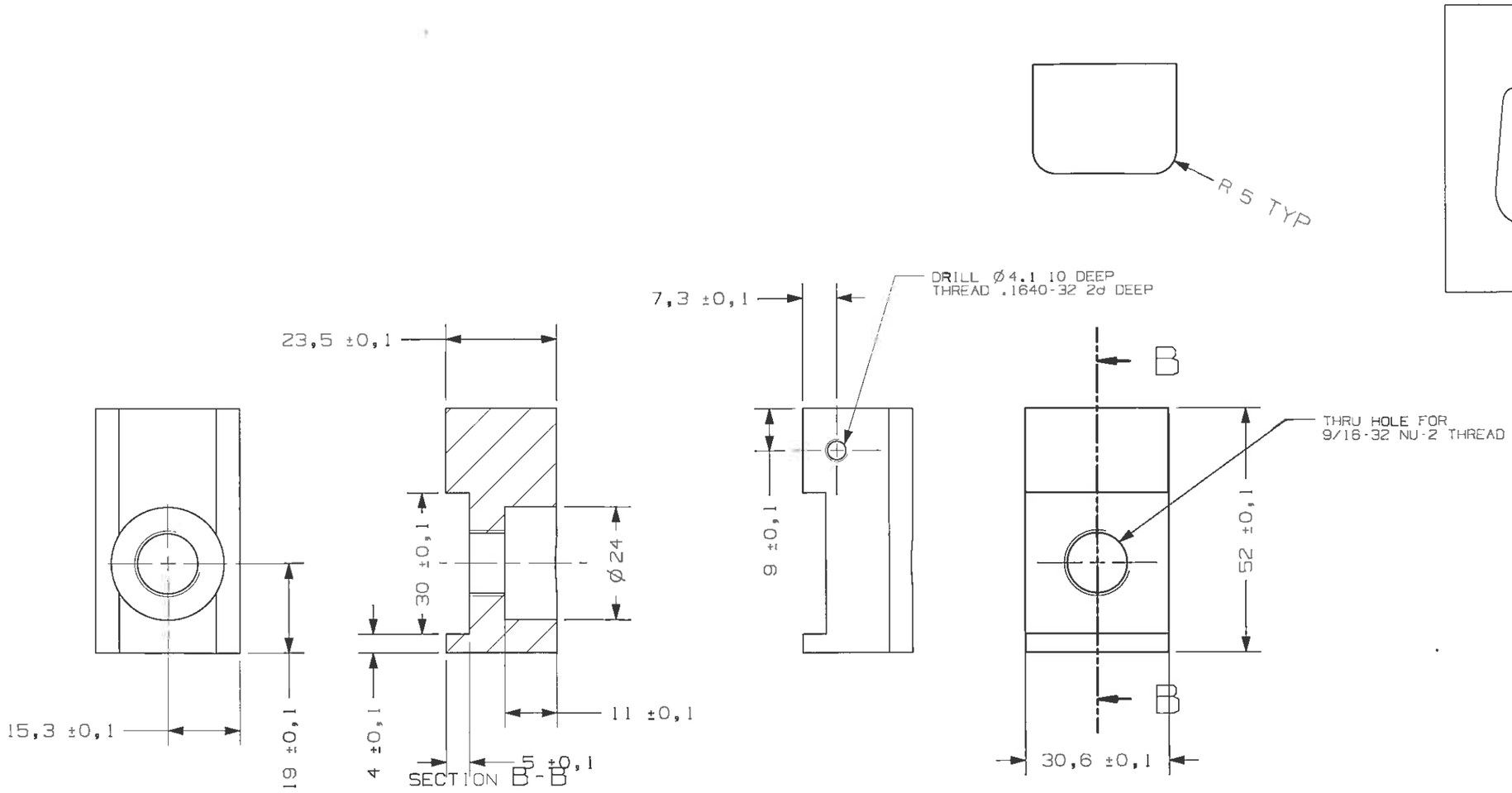

NOTE:

1. MATERIAL: KETRON-PEEK-1000, 30% GLASS FIBER FILLED
2. REMOVE BURRS AND BREAK SHARP EDGES ACC. TO DIN 6784

FILE MODEL: seat_valve_c770rp_10INLET
FILE DRAWING: venting_block_inlet_DWG

REV	DRAWN	DATE	MEC CHECK	DATE	EL CHECK	DATE	SYST ENG	DATE	PA	DATE	CoC	DATE	CHANGE AUTHORITY
/	G.S.	8/7/04			N.A.								

UNLESS OTHERWISE SPECIFIED DIMENSIONS AND TOLERANCES ARE IN mm

IDENTIFICATION MARKING PER

CARLO GAVAZZI SPACE

DRAWING TITLE

RICH SYSTEM
VENTING THREADED BLOCK INLET

SCALE 1:1

PROJECTION

GEN. TOLERANCES PER ISO 2768- m

SPECIAL RA. / GEN. RA. 3.2

CARLO GAVAZZI

DASH NUMBER	NEXT ASSY
-01	11-RICSYS-10.000

APPLICATION	SIZE	CAGE CODE	DRAWING NUMBER	REV	SHEET
	A3		11-RICSYS-10.015	/	1 OF 1

THIS IS A CAD DRAWING NO MANUAL ALTERATION

ALL RIGHTS RESERVED - COPYRIGHT ACC. TO DIN 34