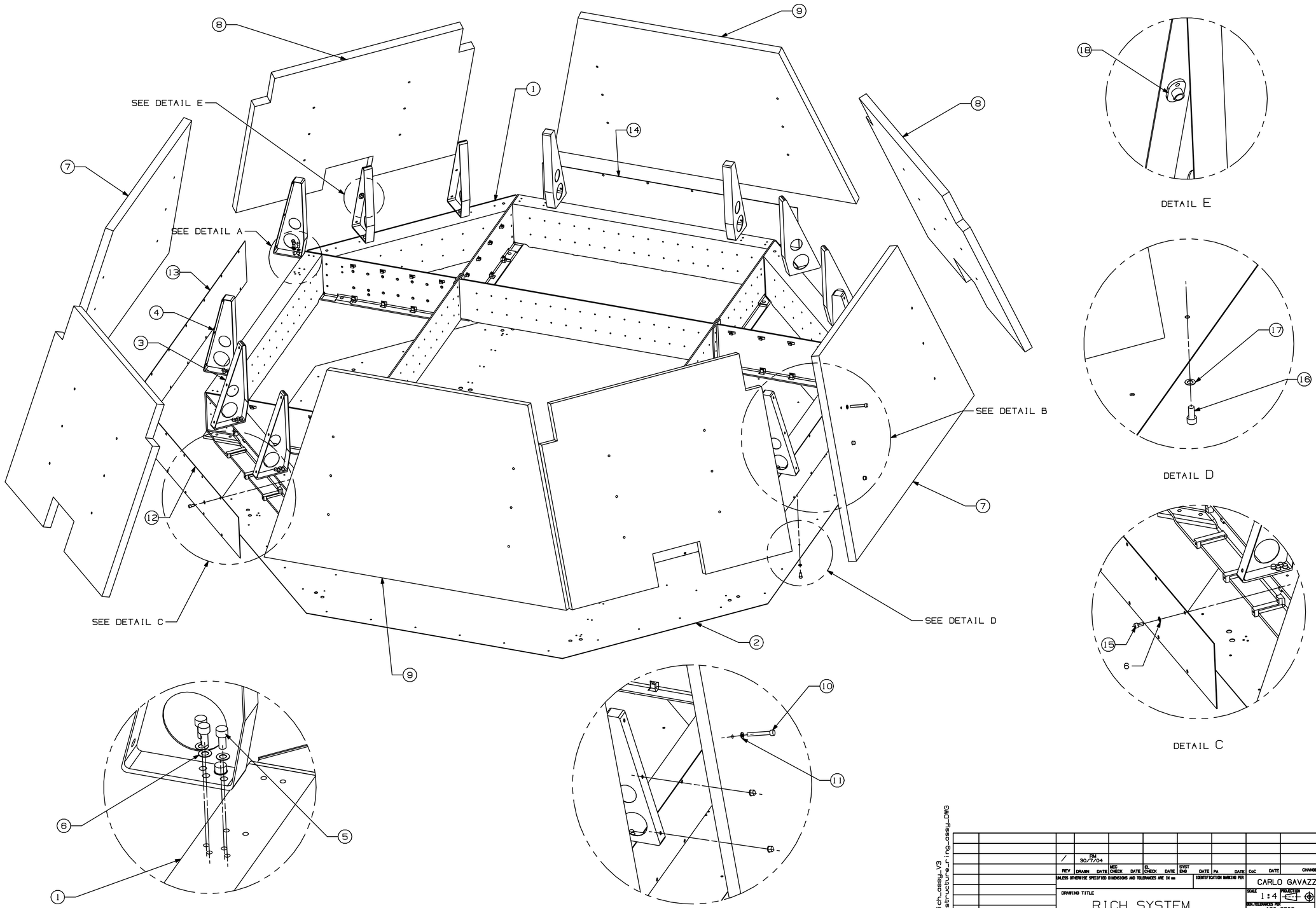

FILE MODEL: rich_assy_V3
FILE DRAWING: structure_ring_assy_DWG

REV	DRAWN	DATE	MEC CHECK	DATE	EL CHECK	DATE	SYST ENG	DATE	PA	DATE	CoC	DATE	CHANGE AUTHORITY
/	RM 30/7/04												

UNLESS OTHERWISE SPECIFIED DIMENSIONS AND TOLERANCES ARE IN mm

IDENTIFICATION MARKING PER

CARLO GAVAZZI SPACE

DRAWING TITLE

RICH SYSTEM
STRUCTURE RING ASSY

SCALE 1:4

PROJECTION

GEN. TOLERANCES PER ISO 2768-

SPECIAL NO.

MODEL

CARLO GAVAZZI

DASH NUMBER	NEXT ASSY
-01	11-RICSYS-00.000

APPLICATION

SIZE A1

CAGE CODE

DRAWING NUMBER 12-RICSYS-00.000

REV /

SHEET 1 OF 2

THIS IS A CAD DRAWING NO MANUAL ALTERATION

ALL RIGHTS RESERVED - COPYRIGHT ACC. TO DIN 34