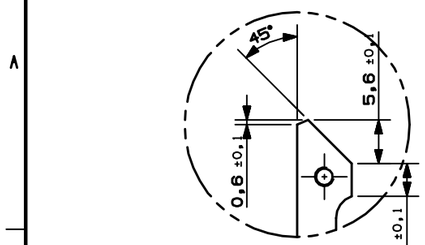

DETAIL F
SCALE 2:1

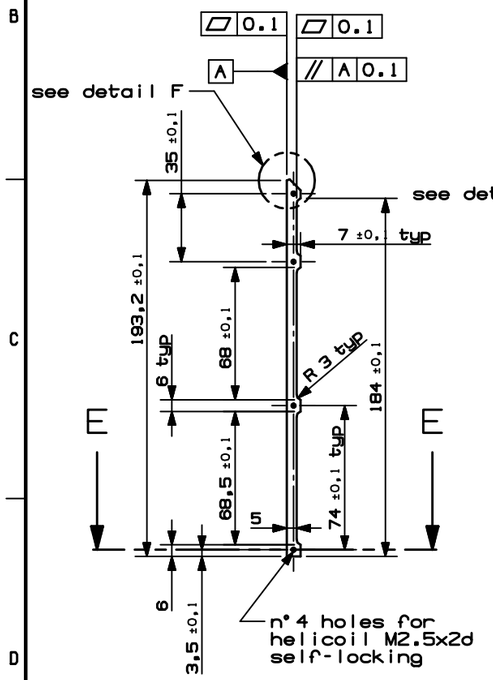

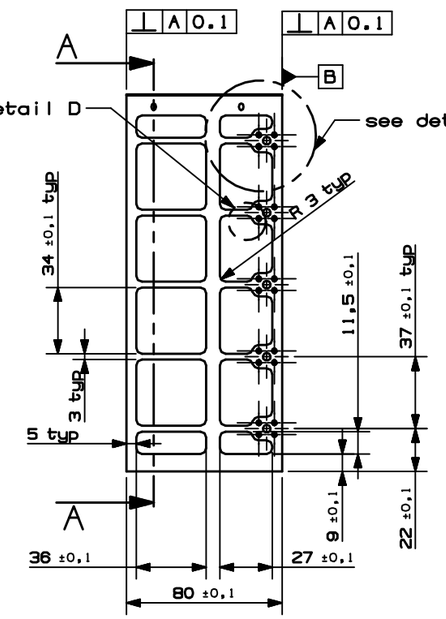

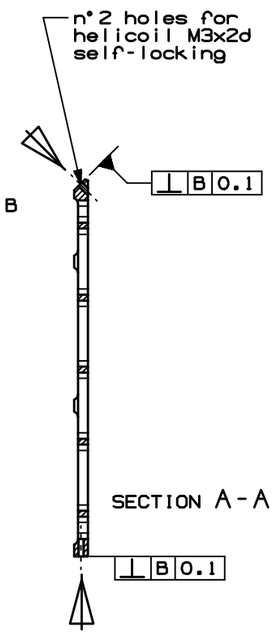

SECTION A-A

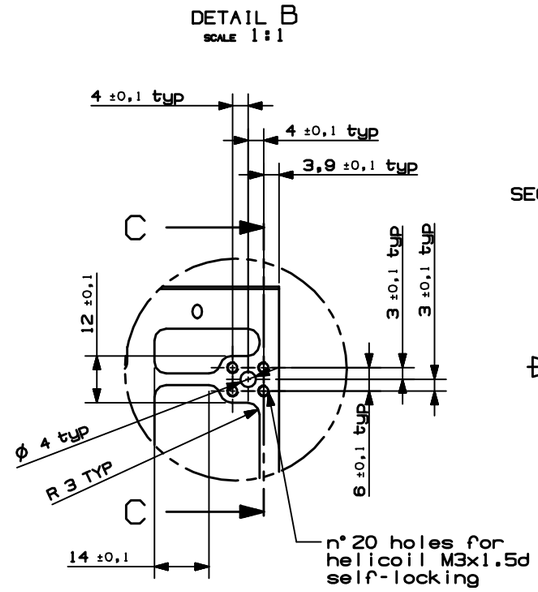

DETAIL B
SCALE 1:1

SECTION C-C
typ

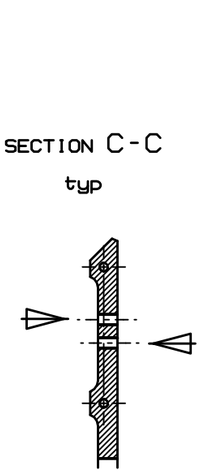

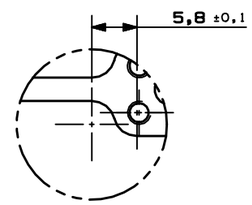

DETAIL D
SCALE 2:1

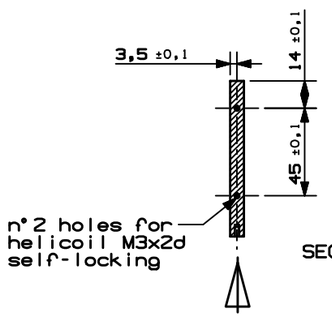

SECTION E-E

NOTES:
1. MATERIAL: ALUMINIUM ALLOY 7075 T7351 SPEC QQ-A-250/12.
2. NDI PER ASTM-E 1417, TYPE I, METHOD A, SENSITIVITY LEVEL 3 SHALL BE PERFORMED.
3. SURFACE TREATMENT: ALODINE PER MIL-C-5541, CLASS 3, TYPE 2. 1200 GOLD.
4. REMOVE BURRS AND BREAK SHARP EDGES WITH CHAMFER OF 0,3 X 45° ACCORDING TO DIN 6784
5. INSTALL INSERTS ACCORDING TO GD-PR-CGS-060.
   ▷ INDICATES HELICOIL INSERTION DIRECTION

FILE MODEL: TRI_intern_3_2H.prt
FILE DRAWING: beam_3_dwg.prt

REV	DRAWN	DATE	MEC CHECK	DATE	EL CHECK	DATE	SYST ENG	DATE	PA	DATE	CoC	DATE	CHANGE AUTHORITY
1		29/06/04 AM											

UNLESS OTHERWISE SPECIFIED DIMENSIONS AND TOLERANCES ARE IN mm
IDENTIFICATION MARKING PER

CARLO GAVAZZI SPACE

DRAWING TITLE
RICH SYSTEM
BEAM 3

SCALE 1:2
PROJECTION
GEN. TOLERANCES PER ISO 2768- m
SURFAC. IN 3.2
CARLO GAVAZZI

DASH NUMBER: 12-RICSYS-10.000
NEXT ASSY
APPLICATION
SIZE A2
CAGE CODE
DRAWING NUMBER 12-RICSYS-10.004
REV 1
SHEET 1 OF 1

THIS IS A CAD DRAWING NO MANUAL ALTERATION

ALL RIGHTS RESERVED - COPYRIGHT ACC. TO DIN 34