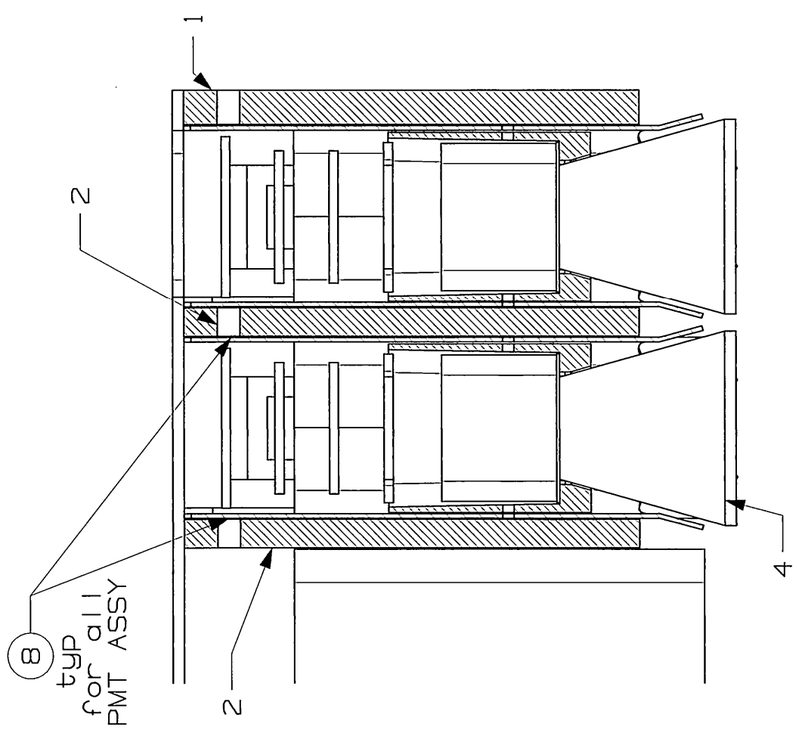

SECTION C-C
SCALE 1:1

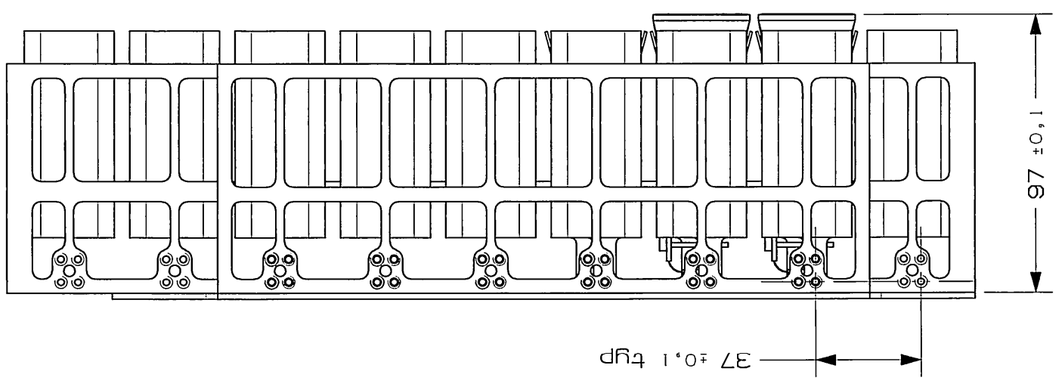

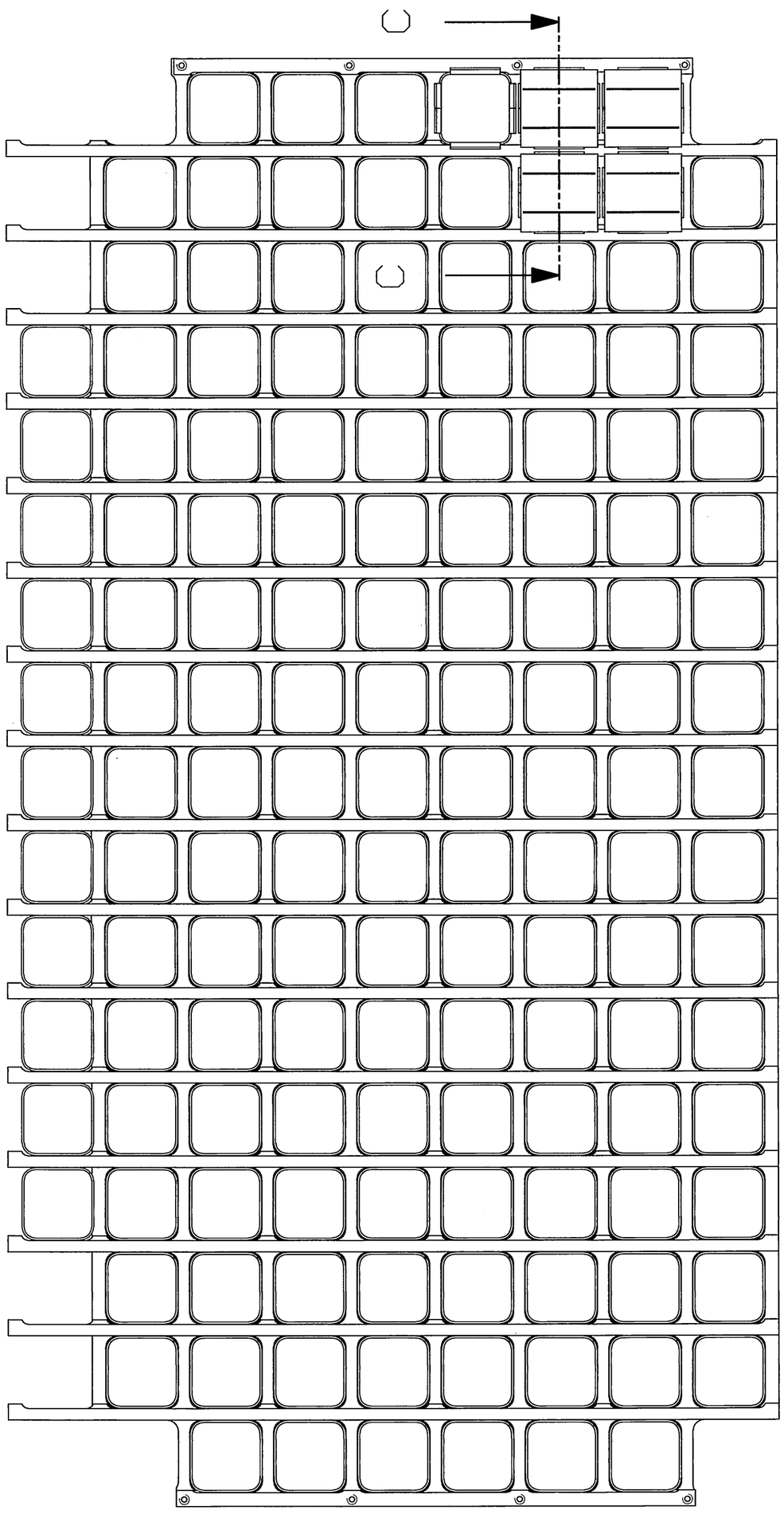

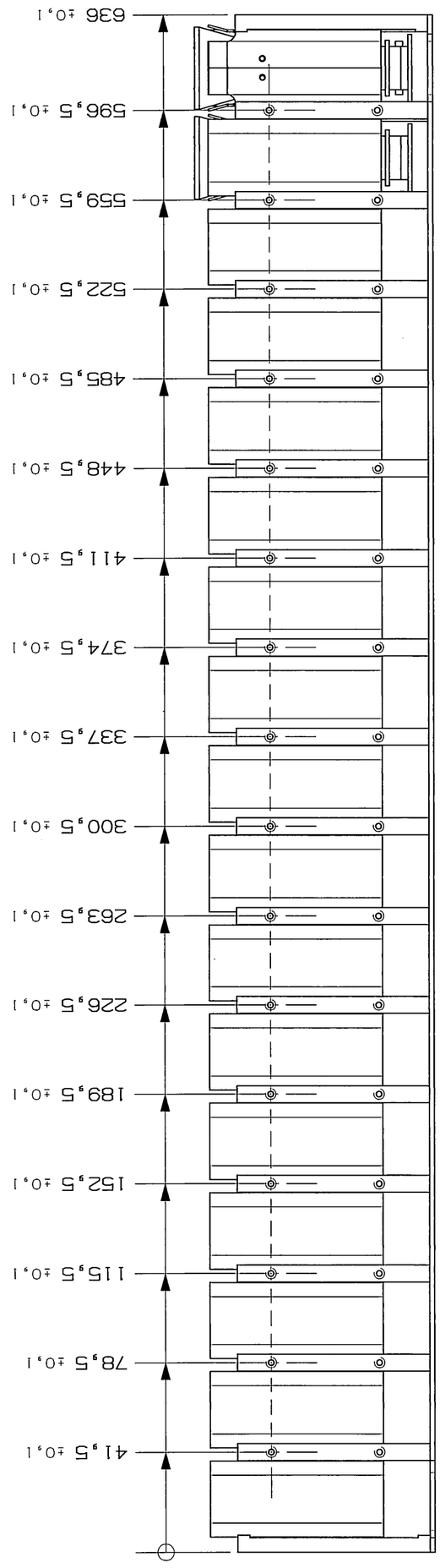

REV	DRAWN	DATE	CHECK	DATE	CHECK	DATE	SYST ENG	DATE	PA	DATE	CoC	DATE	CHANGE AUTHORITY
/	20-07-04 AM		MEC		EL				IDENTIFICATION MARKING PER				

UNLESS OTHERWISE SPECIFIED DIMENSIONS AND TOLERANCES ARE IN mm

DRAWING TITLE: RICH SYSTEM GRIGLIA X ASSY

CARLO GAVAZZI SPACE

CARLO GAVAZZI

SCALE 1:2 | PROJECTION | GEN. TOLERANCES PER ISO 2768-m | SPECIAL RQ. | GEN.RQ. 3.2

SIZE A2 | CAGE CODE | DRAWING NUMBER 12-RICSYS-20.000 | REV / | SHEET 3 OF 4

DASH NUMBER -01 | NEXT ASSY 11-RICSYS-00.000 | APPLICATION

THIS IS A CAD DRAWING NO MANUAL ALTERATION

ALL RIGHTS RESERVED - COPYRIGHT ACC. TO DIN 34

FILE MODEL: rect_assy_5mm_08_V2
FILE DRAWING: rect_assy_5mm_08_V2.dwg

12-RICSYS-20-080 3/4